2026

WEG Standard Product Catalog

Motors, Drives, Enclosed Motor Controls, and Gears

Register to keep your catalog up-to-date

Driving efficiency and sustainability

US100 -10.2026

What's NEW

INNOVATION TODAY FOR A BETTER TOMORROW

W23 SYNC+
Ultra Premium Efficiency

HYDRODUTY®
Now up to 10 HP

SHARK®
Now up to 30 HP

CFW500 N4X/IP66
Washdown Drive

EXPANDED WHITE WASHDOWN
Hydrowash Ratings

CFW900
New Higher HP

STOCK DC GARMOTORS
G209 | GIL100 | GIL200

SECTION A

Single-Phase General Purpose Motors - (A-17)

TEFC – Foot Mount . . . A-19
TEFC – C-Face – Foot Mount . . . A-21
TEFC – C-Face – Footless . . . A-22
TEFC – Foot Mount – Thermally Protected . . . A-22
ODP – Foot Mount . . . A-23
ODP – Resilient Base . . . A-24
ODP – C-Face – Foot Mount . . . A-25
ODP – C-Face – Footless . . . A-26
ODP – Foot Mount – Thermally protected . . . A-26

Three-Phase General Purpose Motors - (A-29)

TEFC – Foot Mount . . . A-32
TEFC – C-Face – Foot Mount . . . A-42
TEFC – C-Face – Footless . . . A-46
ODP – Foot Mount . . . A-50
ODP – C-Face – Foot Mount . . . A-56
ODP – C-Face – Footless . . . A-60
ODP – Resilient Base . . . A-60
TEFC – Foot Mount and C-Face Foot Mount with Internal AEGIS® SGR . . . A-61
ODP – Foot Mount and C-Face Foot Mount with Internal AEGIS® SGR . . . A-66

IEEE 841 – Three-Phase

TEFC – Foot Mount – NEMA Premium® . . . A-70
TEFC – C-Face – Foot Mount – NEMA Premium® . . . A-74
TEFC – C-Face – Footless – NEMA Premium® . . . A-75

BRAKE MOTORS – Three-Phase

TEFC – Foot Mount – Cast Iron . . . A-77
TEFC – Foot Mount – Rolled Steel . . . A-79
TEFC – C-Face – Foot Mount – Rolled Steel . . . A-79
TEFC – C-Face – Footless – Rolled Steel . . . A-79

W23 Sync+ Permanent Magnet Motor

W23 Sync+ Permanent Magnet Motor . . . A-81

IEC TRU-METRIC™ - Three-Phase

TEFC – Foot Mount . . . A-84
TEFC – Foot Mount (IE4) . . . A-87
TEFC – Foot Mount – (FF) B5 D-Flange Style . . . A-87

Integrated Solutions

Integrated Solution (NEMA TEFC W22 + MW500) . . . A-88

Super Premium Efficiency Motors - (A-88)

GENERAL PURPOSE – Three-Phase

TEFC – Foot Mount – Super Premium . . . A-91

Severe Duty – Three-Phase Motors - (A-93)

GENERAL PURPOSE

TEFC – Foot Mount . . . A-97
TEFC – C-Face – Foot Mount . . . A-104
TEFC – C-Face – Footless . . . A-106

IEEE 841

TEFC – Foot Mount . . . A-108
TEFC – C-Face – Foot Mount . . . A-112
TEFC – C-Face – Footless . . . A-113
W22 API661 Severe Duty Motors . . . A-115

CRUSHER DUTY

TEFC – Foot Mount . . . A-117

VECTOR DUTY

TENV – Foot Mount – Double C-Face . . . A-119

W23 Sync+ Permanent Magnet Motors

TEFC - Foot Mount . . . A-121

Continued on next page

SECTION A

IEC TRU-METRIC™

TEFC – Foot Mount IE3 . . . . . A-124
TEFC – Foot Mount (IE4) A-125
TEFC – Foot Mount – FF-Face Motors A-126

Explosion Proof Motors - (A-124)

SINGLE-PHASE

Foot Mount A-129
C-Face – Foot Mount A-129
C-Face – Footless A-129

THREE-PHASE

Foot Mount A-131
C-Face – Foot Mount A-135
C-Face – Footless A-136
JP – Foot Mount A-136
ATEX Foot Mount A-139

Washdown Duty - (A-139)

HYDRODUTY® - STAINLESS STEEL

TEFC - Three-Phase – C-Face Foot Mount A-144
TENV - Three-Phase – C-Face Foot Mountt A-144
TEFC – Three-Phase C-Face Footless A-145
TENV – Three-Phase C-Face Footless A-145
C-Face Foot Mount Drive Match CFW500 Washdown Drive A-146
C-Face Footless Drive Match CFW500 Washdown Drive A-147

PICKERPLUS™ - WHITE EPOXY

TEFC – Three-Phase – C-Face Foot Mount A-148
TEFC – Three-Phase C-Face Footless A-148

SHARK® - STAINLESS STEEL

TEFC / TENV – Three-Phase - C-Face Foot Mount A-149
TEFC / TENV – Three-Phase C-Face Footless A-150
C-Face Foot Mount Drive Match CFW500 Washdown Drive A-151
C-Face Footless Drive Match CFW500 Washdown Drive A-152

HYDROWASH® - WHITE EPOXY

TEFC / /TENV – Three-Phase – C-Face Foot Mount A-155
TEFC & TENV – Three-Phase C-Face Footless A-156
JM - White Epoxy - TEFC - C-Face, Foot Mount, IP56 . . . . . A-157
TEFC – Three-Phase C-Face Rigid Base A-158
C-Face Foot Mount Drive Match CFW500 Washdown Drive A-159
C-Face Footless Drive Match CFW500 Washdown Drive A-160
C-Face Rigid Base Drive Match CFW500 Washdown Drive A-160

WASHDOWN DUTY VARIABLE FREQUENCY DRIVE

CFW500 – N4X/IP66 w/o Disconnect Switch A-162
CFW500 – N4X/IP66 w/ Disconnect Switch A-163
CFW500 Options and Accessories A-164
CFW500 Technical Data A-165

Fractional Motors - (A-167)

SINGLE-PHASE

TEFC – Foot Mount A-169
TEFC – C-Face – Foot Mount A-170
TEFC – C-Face – Footless A-170
TEFC – Foot Mount – Thermally Protected A-171
ODP – Foot Mount A-172
ODP – Resilient Base A-173
ODP – C-Face – Foot Mount A-174
ODP – C-Face – Footless A-175
ODP – Foot Mount – Thermally Protected A-175

Data subject to change without notice.

Fractional Motors - *continued*

THREE-PHASE

TEFC – Foot Mount A-176
TEFC – C-Face – Foot Mount A-177
TEFC – C-Face – Footless A-178
TEFC – Footless – Explosion Proof A-178
ODP – Foot Mount A-179
ODP – C-Face – Foot Mount A-180
ODP – C-Face – Footless A-181
ODP – Resilient Base A-181

DC MOTORS

NEMA 56 PMDC Motors A-182
NEMA 145TC PMDC Motors A-182

EXPLOSION PROOF - SINGLE-PHASE

Foot Mount A-184
C-Face – Foot Mount A-184
C-Face – Footless A-185

EXPLOSION PROOF - THREE-PHASE

Foot Mount A-186
C-Face – Foot Mount A-186

Air Handling Motors - (A-188)

COMMERCIAL HVAC MOTORS

TEFC – Single-Phase – Foot Mount A-189
TEAO – Single-Phase – Foot Mount A-189
TEAO – Single-Phase – Resilient Base A-189
ODP – Single-Phase – Foot Mount A-190
ODP – Single-Phase – Resilient Base A-191
ODP – Three-Phase – Resilient Base A-192
ODP – Single-Phase – Evaporative Cooler A-192
Yoke Motors A-192

HVAC MOTORS - WITH INTERNAL AEGIS® SGR

TEFC – Three-Phase – Foot Mount A-193
ODP – Three-Phase – Foot Mount A-198

COOLING TOWER MOTORS – THREE-PHASE

TEFC – Three-Phase – Foot Mount – NEMA Premium® A-202
TEAO – Three-Phase – Foot Mount – NEMA Premium® A-205
TEFC – Three-Phase – Dual Speed (1 & 2 Windings) – High Efficiency A-207

PAD MOUNT MOTORS – Three-Phase

TEAO – NEMA Premium® A-211

Pump Motors - (A-213)

JET PUMP SINGLE-PHASE (56C/56J FRAMES)

TEFC – Foot Mount A-214
TEFC – Footless A-214
ODP – Foot Mount A-215
ODP – Footless A-215

JET PUMP THREE-PHASE (56C/56J FRAMES)

TEFC – Foot Mount A-216
TEFC – Footless A-216
TEFC – Footless - Explosion Proof A-216
ODP – Foot Mount A-217
ODP – Footless A-217

Continued on next page

SECTION A

Pump Motors - *continued*

CLOSE-COUPLED PUMP TEFC MOTORS

JM – TEFC – Single-Phase A-219
JP – TEFC – Single-Phase. A-220
JM – TEFC – Three-Phase. A-221
JP – TEFC – Three-Phase A-225
JP – TEFC – Explosion Proof A-228

CLOSE-COUPLED PUMP ODP MOTORS

JM – ODP – Single-Phase. A-229
JP – ODP – Single-Phase A-229
JM – ODP – Three-Phase A-230
JM – ODP – Three-Phase – Footless Vertical A-233
JP – ODP – Three-Phase. A-234
JP – ODP – Three-Phase – Footless Vertical A-237

CLOSE-COUPLED PUMP TEFC MOTORS - WITH INTERNAL AEGIS® SGR

JM – TEFC – Three-Phase. A-239
JP – TEFC – Three-Phase A-240

CLOSE-COUPLED PUMP ODP MOTORS - WITH INTERNAL AEGIS® SGR

JM – ODP – Three-Phase A-241
JP – ODP – Three-Phase. A-242

FIRE PUMP MOTORS

ODP – Three-Phase A-245
ODP – Three-Phase – C-Face A-247
ODP – Three-Phase – JM – Footless Vertical. A-248
ODP – Three-Phase – JP – Footless Vertical A-249
W40 – ODP (50Hz) – Three-Phase – IE2 . . . . . A-251
TEFC (50Hz) – Three-Phase – IE2 . . . . . A-252

P-BASE MOTORS

TEFC – Three-Phase – NEMA Premium® A-253

IEC Motors - (A-257)

TRU-METRIC™

TEFC – Foot Mount A-258
TEFC – Foot Mount – FF-Face A-261

ATEX MOTORS

TEFC – Ex ec A-263
TEFC – db – IE3 . . . . . A-267

Continued on next page

Data subject to change without notice.

Farm Duty Motors - (A-271)

SECTION A

TEFC – Single-Phase – General Purpose – Foot Mount . . . A-272
TEFC – Single-Phase – General Purpose –C-Face - Foot Mount . . . A-273
TEFC – Single-Phase – General Purpose –C-Face - Footless . . . A-273
TEFC – Single-Phase – Auger Drive – Footless . . . A-274
TEAO – Single-Phase – Poultry Fan – Foot Mount . . . A-274
TEAO – Single-Phase – Poultry Fan – Resilient Base . . . A-274
PSC Direct Drive . . . A-274
TEAO – Three-Phase – Grain Dryer/Vane Axial Fan . . . A-275
TEAO – Single-Phase – Grain Dryer . . . A-275
TEAO – Single-Phase – Aeration Fan . . . A-275
TEAO – Three-Phase – Aeration Fan . . . A-275
TEFC – Three Phase – Grain Dryer for Centrifugal Fans . . . A-276
TEFC – Single Phase – Grain Dryer for Centrifugal Fans . . . A-276
ODP – Three Phase – Grain Dryer for Centrifugal Fans . . . A-276
ODP – Single Phase – Grain Dryer for Centrifugal Fans . . . A-276
TEFC – Single-Phase – C-Face – Foot Mount – Irrigation Duty . . . A-277
TEFC – Three-Phase – C-Face – Foot Mount – Irrigation Duty . . . A-277
Irrigation Drive Motors . . . A-278
Jet End Booster Pump Motors . . . A-278

Definite Purpose Motors - (A-280)

VECTOR DUTY MOTORS

TENV – Three-Phase – Foot Mount – Double C-Face . . . A-280

OIL WELL PUMPING – TEFC

TEFC – Three-Phase – NEMA Design 'D' . . . A-282

COMPRESSOR DUTY MOTORS

ODP – Single-Phase – Foot Mount . . . A-284
ODP – Three-Phase – Foot Mount – NEMA Premium® . . . A-284

INSTANT REVERSE - SINGLE PHASE MOTORS

ODP – C-Face – Footless . . . A-285
ODP – Resilient Base . . . A-285

REFRIGERATION MOTORS

Foot Mount . . . A-287
Foot Mount – RFVFD Models with Aegis Rings . . . A-287
Foot Mount – C-Face . . . A-287

HYDRAULIC PUMP MOTORS

TEFC – Three-Phase – SAE-A – High Efficiency . . . A-288

BRAKE MOTORS

TEFC – Foot Mount – Cast Iron . . . A-290
TEFC – Foot Mount – Rolled Steel . . . A-292
TEFC – C-Face – Foot Mount – Rolled Steel . . . A-293
TEFC – C-Face – Footless – Rolled Steel . . . A-293

SAW ARBOR MOTORS

TEFC – Three-Phase – Right-Hand Thread . . . A-294
TEFC – Three-Phase – Left-Hand Thread . . . A-294

SOOT BLOWER MOTORS

TEFC – C-Face – Footless . . . A-295

WATER COOLED MOTORS

TEWC - Three-Phase - Foot Mount . . . A-297

Continued on next page

Medium Voltage Motors and Soft Starters (A-299)

W50 Medium Voltage Motors – TEFC 2300 – 4160V A-300
W50 Medium Voltage Motors – TEFC Add-On Modifications A-301
W50 Medium Voltage 2300V – Electrical Data. A-302
W50 Medium Voltage 4160V – Electrical Data. A-304
W50 Mechanical Data. A-306
Medium Voltage Worksheet. A-310
W60 Medium Voltage Overview. A-311
W60 Medium Voltage Motors – TEFC 2300 – 4160V A-312
W60 Medium Voltage 2300V & 4000V – Electrical Data A-313
W60 Medium Voltage - Mechanical Data. A-314
SSW7000C Medium Voltage Soft Starter A-316

DC Motors and Gearmotors - (A-318)

NEMA Frame PMDC Motors – 90/180VDC – General Purpose A-319
NEMA Frame PMDC Motors – 12/24VDC – General Purpose A-319
Dimensions A-320
Brushes for RAE “MT” Motors. A-320
Subfractional PMDC Motors – 90/180VDC – TENV - General Purpose A-321
Subfractional PMDC Motors – 12/24VDC - TENV – General Purpose A-321
Dimensions. A-322

Parallel Shaft Gearmotors

G209 Series Gearbox & Dimensions A-323
GIL 100 Series Gearbox & Dimensions A-324
GIL 200 Series Gearbox & Dimensions A-325

Speed Reducers - (A-326)

TG-90™ Catalog Number Sequence, Output Bores and Overhung load ratings A-326
TG-90™ Quill Type Speed Reducers. A-327
TG-90™ Solid Shaft Speed Reducers A-332
Dimensions A-336

Variable Frequency Drives and Enclosed Motor Controls - (A-339)

(for complete line of products see WEG’s Automation Catalogs)

CFW320 Variable Frequency Drive. A-341
CFW500 IP20 Variable Frequency Drive. A-347
CFW500 – Washdown Duty VFD. A-349
CFW900 – System Drive A-360
EDP11 – Enclosed VFD Panel A-373
GPH2 – Combination Soft Starter A-385
ESW Non-Combination Across the Line Starters – 3 Phase – Enclosure Type 1 . . . . . A-395
ESWS Non-Combination Across the Line Starters – Non-reversing – Single-Phase – Enclosure Type 1 . . . . . A-396
PESW Non-Combination Across the Line Starters – Enclosure Type 4X – Three Phase. A-402
PESW Non-Combination Across the Line Starters – Enclosure Type 4X – Single Phase A-404

Continued on next page

Data subject to change without notice.

Variable Frequency Drives and Enclosed Motor Controls - *continued*

ESWC Combination Type-C Across the Line Starter A-406
ESWE Combination Type-E Across the Line Starter Enclosure Type 4X – without CPT A-409
ESWE Combination Type-E Across the Line Starter Enclosure Type 4X – with CPT A-409
ESWX Overview A-412
ESWX-M25 Series Explosion Proof Manual Motor Starters. A-413
ESWX-M65 Series Explosion Proof Manual Motor Starters. A-413
ESWX-M100 Series Explosion Proof Manual Motor Starters. A-414
ESWX NEMA 7/9 Series Explosion Proof Manual Motor Starters. A-415
Custom Control Panels Data Worksheet and Request for Quote A-419

Medium Voltage Starters

SSW7000C A-420

Add-On Modifications, Parts and Motor Fleet Management- (A-426)

In-House Modifications A-427
Factory Built Modifications A-431
Parts. A-435
Motor Fleet Management A-456

SECTION B

Electrical Data B-1

Mechanical Data. B-4

Product Index B-65

For complete line of Automation Products see WEG's Automation Catalogs

Quick Links @ www.weg.net

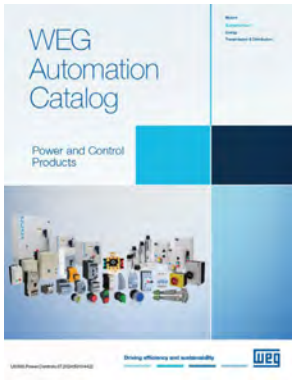

W22 Severe Duty Motors – TEFC

Components Design

Optimal Cooling System

Fan Cover
- Aerodynamic design
- Minimal noise levels
- Superb air flow distribution over frame
- Superior mechanical strength

Fan
- Reinforced fan hub structure
- Low noise design with exceptional air flow

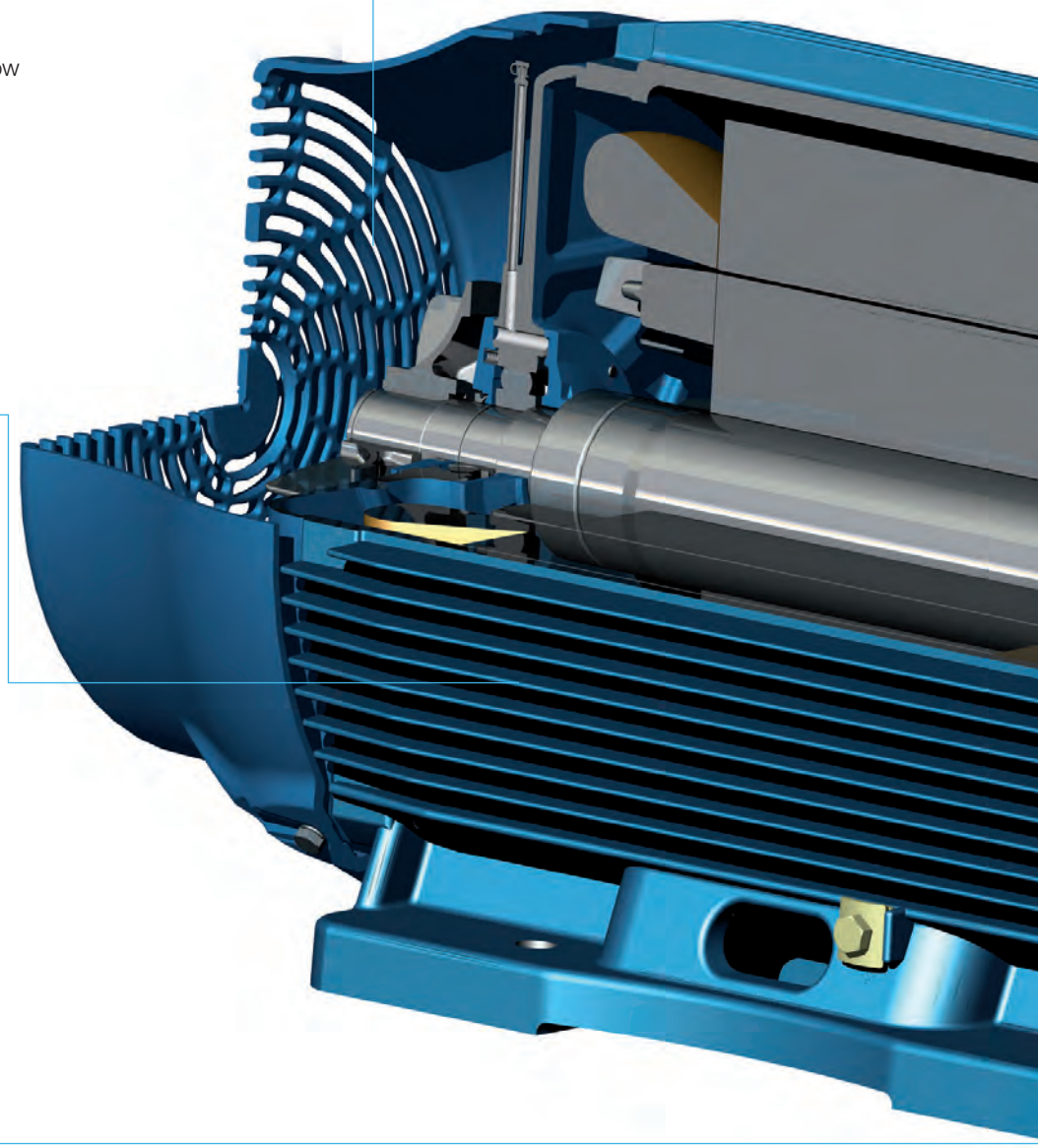

Frame
- Terminal box position outlet on top 447T and larger
- Low temperature on windings and bearings
- Low noise design

Pad for vibration sensor
- Displaced 90^0 from each other

Enhanced Lifting Provisions
- Easy handling - horizontal & vertical
- Superior mechanical strength and handling safety

Solid feet
- Impact resistance
- Ideal for high vibration level applications

Endshields Subsystem

DE (Drive Endshield)
- Fin design increases air flow
- Bearing moved outwards for better load support
- Bearing heat dissipation for reduced bearing temperature
- Reinforced endshield structure

NDE (Non-Drive Endshield)
- Smooth exterior surface
- Optimal air flow
- Designed for low noise
- Structural rigidity for low vibration
- Insulated housing standard on L447/9T and above

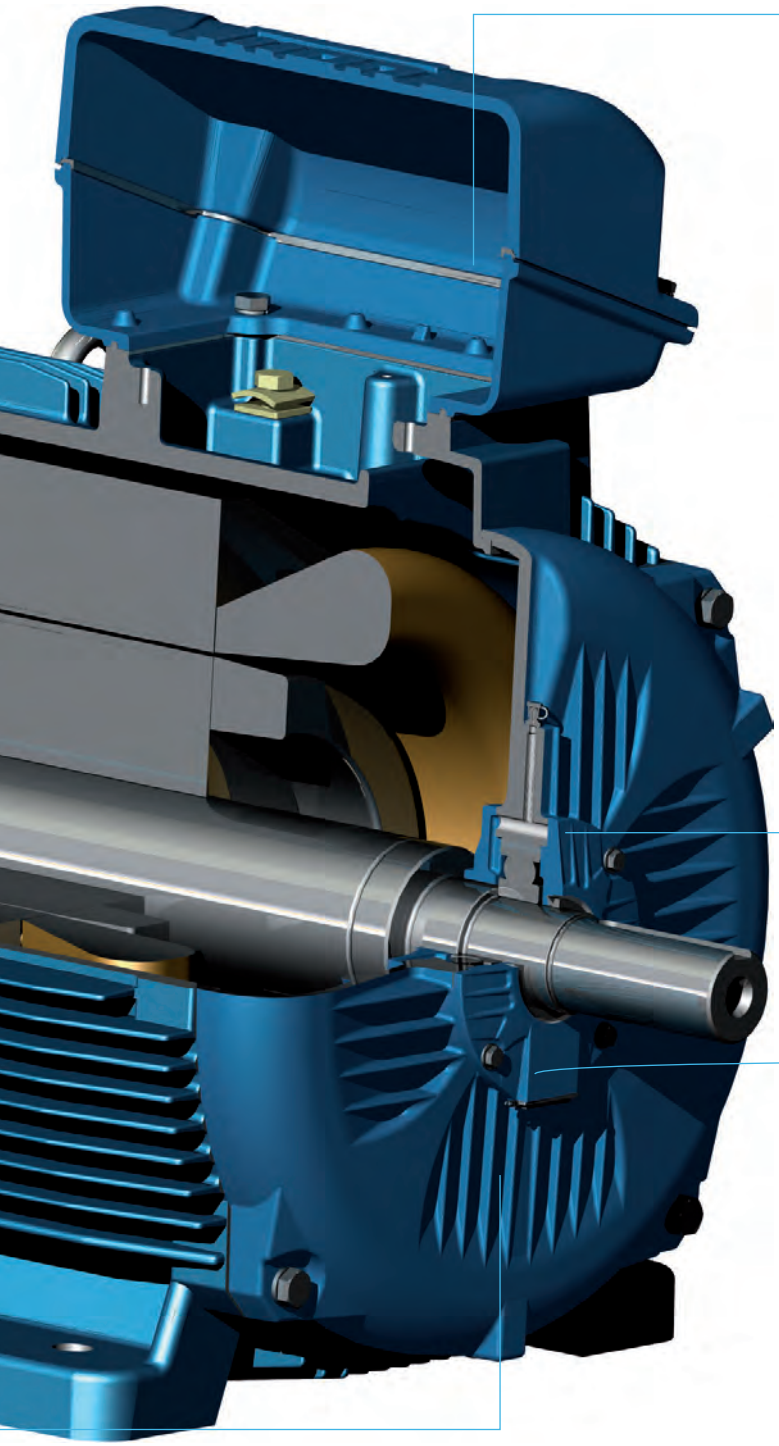

Terminal Box

- Excellent connection quality
- Easy cable handling during installation
- Ample space available for accessory installation
- Easy to maintain
- Mounting F1/F2
- F3 Mounting optional on ≤445T
- F3 Mounting field modifiable 447T and larger
- Rotation on 90° stages

Bearing Caps

External

- Finned surface for superb bearing heat dissipation

Internal

- Positive pressure lubrication system
- High quality bearing lubrication
- Reduced bearing temperature

Seal Subsystem

- Excellent dust and moisture protection
- Excellent protection to high-pressure cleaning

Warranty Policy for Motors

Limited Warranty

WEG provides a limited warranty against defects in materials and workmanship for a specific period, but in no event later than the expiration of the warranty period. If a product date code is within its stated warranty period, no proof of date of purchase is required. Otherwise, a copy of the invoice is necessary to show the date of invoice. Purchases of WEG products from unauthorized dealers or distributors voids warranty coverage. WEG's authorized dealers and distributors are listed on our website at www.weg.net.

No-Fault Warranty Procedure

Motors with frame sizes 215T and smaller, excluding Washdown Motors, are covered under a "No-Fault" warranty procedure. This permits each covered motor to be returned and replaced or credited once if the customer believes it has a defect. If there is more than one failure, please contact the WEG Service Department.The warranty claim may be submitted to WEG on our website at www.weg.net, our e-commerce portal (EASY), or by regular mail. When submitted by mail, the following must be sent to the WEG Service Department to process a warranty claim:

- Original nameplate from the failed motor
- Copy of the original WEG invoice or invoice number for the failed motor
- Brief description of the failure for quality control purposes

Warranty on Washdown Motors (HydroDuty™, PickerPlus™, HydroWash™, and Shark™)

The following must be sent to the WEG Service Department to process a warranty claim:

- Copy of the original WEG invoice or invoice number for the failed motor
- Brief description of the failure for quality control purposes accompanied by photographs supporting the claimed failure
- It may be required to have the motor sent to WEG or to a local service partner for further evaluation.

Warranty on Larger Motors

WEG requires that motors larger than 215T frame be inspected by a WEG Authorized Service Center or an EASA-affiliated service center. The following must be sent to the WEG Service Department to process a warranty claim:

- Completed EASA inspection report
- Repair quote approved by WEG
- Copy of the original WEG invoice or invoice number for the failed motor
- Brief description of the failure for quality control purposes accompanied by photographs supporting the claimed failure

Warranty Period

Standard Efficiency and High Efficiency Low Voltage Motors	18 months from invoice date
Catalog Premium and Super Premium Low Voltage Motors	36 months from invoice date
Catalog W22 IEEE 841 Motors	60 months from invoice date
Washdown motors - HydroDuty™, HydroWash™, and Shark™	Earlier of 42 months from invoice date, or 36 months from installation date
Washdown Motors - PickerPlus™	Earlier of 30 months from invoice date, or 24 months from installation date
Alternators	Earlier of 12 months from start-up date, or 18 months from invoice date
Custom Built Motors	Earlier of 12 months from start-up date, or 18 months from invoice date
Custom Built W50 Motors	Earlier of 18 months from start-up date, or 24 months from invoice date
MV Catalog Products	36 months from invoice date

Warranty Service

If a WEG product requires warranty service due to defective materials or workmanship, WEG shall,at its option: (i) repair or replace the product, or (ii) refund or credit of the purchase price of the product. Warranty service does not extend the warranty period. Warranty coverage is applied to products that have been, at all times, properly stored, maintained, operated, and used under operating conditions for which the product was designed. WEG is not responsible for any expenses incurred in installation,removal from service, transportation (freight) or consequential expenses. THE FOREGOING REMEDIES SHALL BE THE SOLE AND EXCLUSIVE REMEDY OF THE PURCHASER.

Authorized Service Centers

WEG has service centers around the world to meet the needs of our customers. Information regarding the nearest service center can be found on our website at https://www.weg.net/institutional/US/en/contact/service-network or by calling 1-800-ASK-4WEG (1-800-275-4934). Any warranty repair by a service center must be pre-approved by WEG.Service centers should not remove the nameplate nor make repairs without being requested to do so by a WEG Service Department representative.

NOTE: For all Ingersoll-Rand motors, please contact the WEG Service Department prior to any inspection.

WEG USA General Terms and Conditions available at www.weg.net apply to all orders.

Contact WEG Service Department:

Toll-Free:1-800-839-2529 E-Mail: warranty@weg.net

NEMA Market Certificates and Logos

Line	Certificate	Logo	File	Certificate	VFD use
W22	UL Listed Safe area	c UL us 3PT9 LISTED	E104590	Vol. 5 - Sec.10	Yes
	CSA Safe Area	C US Energy Verified	LR 38324	2194017	Yes
	CSA Div 2	C US Energy Verified	LR 50962	2156668	Yes
ODP/W40 to L6809	UL Listed Safe area	c UL us 3PT9 LISTED	E104590		Yes
	CSA Safe Area	C US Energy Verified	LR 38324	2315224	Yes
HGF//W22MV/W50	UL Listed Safe area	c UL us 3PT9 LISTED	E104590		
	CSA Div 2	C US Energy Verified	LR 50962	1959652	Yes
W22 Fire Pump	UL Listed Safe area	UL 68YN LISTED EX5990 FIRE PUMP MOTOR	EX5990	Vol. 1 - Sec.4	Yes
	CSA Safe Area	C US Energy Verified	LR 38324	2194017	Yes
Ord Location	UL 1004-1	c us	E49787		No
Haz Location	XP	c UL us E312535 LISTED	E312535		No
CSA Ord Loc	CSA	C US Energy Verified	241536		No

continued on next page

NEMA Market Certificates and Logos - *continued*

Line	Certificate	Logo	File	Certificate	VFD use
Rolled Steel W01	CSA Safe Area	Energy Verified	LR 38324	70014056	Yes
	CSA Div 2	Energy Verified	LR 50962	70088957	Yes
	UL Listed Safe area UL 1004-1	3PT9 LISTED	E104590	Vol. 5 - Sec.1	Yes
	UL Recognized Safe area, thermally protected UL 1004-1 (Motor)		E104590	Vol.1 - Sec.22	No
	UL Recognized Safe area, with thermal protection certified by UL 1004-3		E125311	Vol. 1 - Sec.25	No
	UL fire Pump	68YN LISTED EX5990 FIRE PUMP MOTOR	EX5990	Vol1 - Sec.1	No
W21X	UL Listed Hazardous area	3PT9 LISTED	E87848		Yes
	CSA Hazardous Area	Energy Verified	050962_C	1629892	Yes
56XP	UL Listed Hazardous area	LISTED	E87848		No
Bluffton	CSA Safe Area	Energy Verified	241536		No
All WEG	CSA Energy Verified	Energy Verified	078282_0		NA

Part Number Configuration

Ordering

WEG catalog numbers contain up to 30 characters, distributed as follows:

XXX (HP)	XX (rpm)	XXX (Model)	X (Volts)	X X X X X (Application + Frame)	XXXX When Applicable

HP[1] - .12 - .16 - .25 - .33 - .50 - .75 - 001 - 0015 - 002 - 003 - 004 - 0045 - 005 - 007 - 010 - 015 - 020 - 025 - 030 - 040 - 050 - 075 - 100 - 125 - 150 - 200 - 250 - 300 - 400 - 450 - 500 - 600 - 650 ...

RPM -

36: 3600rpm	**18:** 1800rpm	**12:** 1200rpm	**09:** 900rpm
30: 3000rpm	**15:** 1500rpm	**10:** 1000rpm	**07:** 750rpm

Model - Three Characters:

X ENCLOSURE	X EFFICIENCY	X PHASE
E - Totally Enclosed	S - Standard Efficiency	1 - 1 Phase
S - Severe Duty IEEE 841	P - High Efficiency	3 - 3 Phase
O - Open drip proof	T - NEMA Premium®	
X - eXplosion proof	G - NEMA 4 Efficiency	
A - Totally Enclosed Air Over	U - Ultra Premium(NP5)	
N - Totally Enclosed Non Ventilated	-SYNC - W23 Sync+	

Voltage	
A - 115V	L - 415V
B - 115 / 208 - 230V	M - 220 / 380 - 415V
C - 208 - 230V	N - 220 / 380V
D - 230V	O - 380 - 415V
E - 230 / 460V*	P - 200V
F - 230 / 460V	Q - 460V
G - 460V PWS	R - 115 / 230V
H - 575V	V - 200 / 400V
I - 220V	W - 460 // 220 - 240 / 380 - 415V
J - 380V	X - Other Voltage
K - 190 / 380V	Y - 460 // 380 - 415 / 660 - 690V

** Suitable for PWS on 254T and larger on low voltage connection.*

 # For Rolled Steel Motors: 190-220/380-415V at 50Hz (derate may apply).

- For IEC Metric motors, the output will be given in kW: .12 - .18 - .25 - .37 - .55 - .75 - 001 - 0015 - 002 - 003 - 004 - 0045 - 005 - 007 - 009 - 011 - 015 - 018 - 022 - 030 - 037 - 045 - 055 - 075 - 090 - 110 - 130 - 150 - 185 - 200 - 220 - 250 - 300 - 315 ...
- 0015 (1.5HP) is the rating that will have four digits for output Identification and only one for RPM.
- 0045 (4.5kW) is the rating that will have four digits for output identification and only one for RPM.

Frame

The frame number must be included as long as the number of remaining characters allows.

Example: 143T, 143TC, 405T, 405TS, 184JP.

XXXX Suffix

–W22, –W2, –W or W = W22 platform
–W22S, –W2S or –WS = Single punched feet
–W22G, –W2G, –W40G or –WG = AEGIS® Ring Inside
–S = Rolled Steel platform
–SG = Rolled Steel/AEGIS® Ring inside
–SRT = Rolled Steel/short frame
–W30S = W30 Smart Slim
–W30 = W30 Smart
–W40 or W4 = W40 platform
–SRG = Rolled Steel/short frame/AEGIS® Ring inside
–RF = Refrigeration

Application / Feature

For Definite Purpose lines, two pre-selected letters must be used after voltage code:

AD - Auger Drive
AF - Aeration Fan
AL - ALuminum Frame
AX - ATEX Motor
BM - Brake Motor
CD - Compressor Duty
CT - Cooling Tower
EC - Evaporative Cooler
FD - Farm Duty
FL - Footless for Fractionals (after frame)
FP - Fire Pump
GD - Grain Dryer
HD - HydroDuty
HP - Hydraulic Pump
I - Instant Reverse (Fractional)
ID - Irrigation Duty
IE - IEEE 841 (Severe Duty IEEE 841)
JP - Jet Pump
KD - Crusher-Duty
OL - Manual OverLoad Protection
OW - Oil Well Pumping
PC - Permanent Capacitor
PF - Poultry Fan
PFH - Poultry Fan with High SF
PM - Pad Mount
PP - Picker Plus
R - (Before the frame size): Round Body
RB - Roller Bearings (Integrals)[2]
RB - Resilient Base (Fractionals)
SA - Saw Arbor
SP - Split Phase
SS - Stainless Steel
VD - Vector Duty (TEBC or TENV)

[2] Roller bearings are recommended for all belt driven applications 100HP and above.

- Models in black text are Standard Efficiency
- Models in blue text are NEMA Premium® Efficiency
- Models in green text are NEMA 4 Efficiency

WEG MOTORS FOR VFD APPLICATIONS - CRITERIA

(Not applicable to motors rated for use in Division 1 hazardous areas. In such cases please contact WEG)

Valid for TEFC NEMA Premium® & IEC Tru-Metric - W22 Platforms and ODP

INSULATION SYSTEM (Exceeds NEMA MG 1 Part 31)

(If any of the conditions below are not met, VFD line filters must be used)

INSULATION SYSTEMS (for all NEMA frame sizes - from 143 to 589 and IEC frame sizes - from 90 to 355) - up to 690 V

Rated Voltage	Feature	Voltage Spikes motor terminals (maximum)	dV/dt inverter terminals (maximum)	Rise Time inverter terminals (minimum)	MTBP Minimum Time Between Pulse
$V_{rated} \leq 460$ V	Standard Insulation	≤2000 V	≤5200 V/µs	≥0,1 µs	≥6 µs
460 V < $V_{rated} \leq 575$ V	Reinforced Insulation	≤2000 V	≤6500 V/µs		

BEARING PROTECTION (for all rated voltage ranges)

NEMA Frame Size	Feature
Frame ≤449	· Optional: Insulated NDE endbell / insulated bearing
L449T – 589	Insulated NDE endbell standard L449 and above. Optional: insulated bearing (*)
	Shaft grounding recommended where insulated bearings are applied
IEC Frame Size	**Feature**
Frame ≤315	· Optional: Insulated NDE endbell / insulated bearing
315L – 355	Insulated NDE endbell standard 315L and above. Optional: insulated bearing (*)
	Shaft grounding recommended where insulated bearings are applied

(*) For insulated bearing, please contact WEG

TORQUE CRITERIA - Valid for 2, 4, 6 and 8 pole motors

NEMA PREMIUM® EFFICIENCY / IEC MOTORS - TEFC MOTORS

Frame Size	Constant Torque	Variable Torque
143 – 586/7 / 90 – 355 (1)	20:1 / 12:1	1000:1
586/7 / 355 (2)	6:1 / 2:1	1000:1 / 10:1

Satisfactory motor performance depends on proper drive setup - please contact WEG.
(1) For 250 HP / 185 kW or lower power motors. Also valid for 449 / 315 frames.
(2) For motors higher than 250 HP / 185 kW.

HIGH EFFICIENCY AND NEMA PREMIUM® EFFICIENCY - ODP MOTORS

Frame Size	Constant Torque	Variable Torque
182T – 364/5T	4:1	1000:1
404/5T – 5010T	2:1	1000:1

NOTES:

- Maximum recommended Inverter switching frequency of 5 kHz (minimum of 2.5 kHz)
- The speed ranges stated above are related to the motor thermal capacity only to 60HZ operated motors
- NEMA Premium® Efficiency WEG motors of all frame sizes can also be blower cooled under request. In such case, the motor will be suitable for variable and constant torque applications rated up to 1000:1
- NEMA Premium® Efficiency WEG motors comply with those maximum safe operating speeds established in NEMA MG1-2016, part 30 (consult table 30-1)
- Per IEC standard 60034-18-41:
  - Exceed severe IVIC (**) level phase to ground - > 2392
  - Exceed moderate IVIC (**) level phase to phase - > 2563

(**) Impulse Voltage Insulation Class

Single-Phase General Purpose Motors - (A-17)

TEFC – Foot Mount A-19
TEFC – C-Face – Foot Mount A-21
TEFC – C-Face – Footless A-22
TEFC – Foot Mount – Thermally Protected. A-22
ODP – Foot Mount. A-23
ODP – Resilient Base A-24
ODP – C-Face – Foot Mount A-25
ODP – C-Face – Footless A-26
ODP – Foot Mount – Thermally protected A-26

Single-Phase General Purpose Motors

TEFC Rolled Steel

ODP Rolled Steel

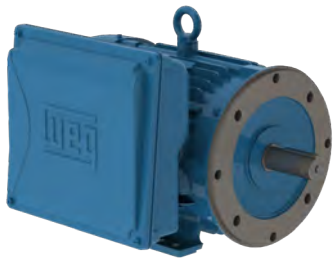

TEFC Cast Iron

Resilient Base

TEFC & ODP

High Starting Torque makes these motors ideal for a wide range of applications.

Standard Features:

- Ball bearings
- Class F insulation
- F1 Mounted
- V-ring Seals

Features that make a difference:

- High Starting Torque
- 182T frames and up are cast iron for severe duty
- NPT Threaded Holes in Terminal Box

Please refer to inside back cover for description of "NOTES"

For detailed specifications, data sheets, drawings and performance curves visit http://www.weg.net

Data subject to change without notice.

TEFC - Foot Mount

HP	kW	RPM	Frame	Catalog Number	List Price	Mult. Symbol	Approx. Shipping Weight (lbs)	Service Factor	FL Amps @ High	FL. Eff (%)	"C" Dimension (in)	Voltage (V)	Notes
0.25	0.18	3600	W56	**.2536ES1BW56-S**	**$257**	F1	20	1.15	2.10	50.0	10.713	115/208-230	9
		1800	W56	**.2518ES1BW56-S**	**$267**	F1	20	1.15	2.30	57.0	11.106	115/208-230	9
0.33	0.25	3600	W56	**.3336ES1BW56-S**	**$267**	F1	23	1.15	2.60	54.0	11.106	115/208-230	9
		1800	W56	**.3318ES1BW56-S**	**$283**	F1	22	1.15	3.00	61.0	11.500	115/208-230	9
		1800	W56	**.3318ES1RFDW56-S**	**$284**	R1	22	1.15	3.00	61.0	11.500	115/230	4,9
0.50	0.37	3600	W56	**.5036ES1BW56-S**	**$284**	F1	24	1.15	3.50	60.0	11.500	115/208-230	9
		3600	W56	**.5036ES1BOLW56-S**	**$316**	F1	24	1.15	3.50	60.0	11.500	115/208-230	4,9
		1800	W56	**.5018ES1RFDW56-S**	**$308**	R1	25	1.15	4.00	64.0	11.894	115/230	4,9
		1800	W56	**.5018ES1BW56-S**	**$312**	F1	24	1.15	4.00	64.0	11.894	115/208-230	9
		1200	56	**.5012ES1B56-S**	**$512**	F1	38	1.15	3.20	71.0	13.508	115/208-230	9
0.75	0.55	3600	56	**.7536ES1BOL56-S**	**$329**	F1	31	1.15	4.00	66.0	12.721	115/208-230	4,9
		3600	56	**.7536ES1B56-S**	**$297**	F1	31	1.15	4.00	66.0	12.721	115/208-230	9
		1800	56	**.7518ES1RFD56-S**	**$357**	R1	34	1.15	5.30	68.5	13.114	115/230	4,9
		1800	56	**.7518ES1B56-S**	**$348**	F1	33	1.15	5.30	68.5	13.114	115/208-230	9
		1200	56	**.7512ES1B56-S**	**$648**	F1	44	1.15	4.70	70.0	14.295	115/208-230	9
1	0.75	3600	56	**00136ES1BOL56-S**	**$408**	F1	35	1.15	5.10	70.0	13.114	115/208-230	4,9
		3600	56	**00136ES1B56-S**	**$376**	F1	34	1.15	5.10	70.0	13.114	115/208-230	9
		3600	143/5T	**00136ES1B143T-S**	**$553**	RS	35	1.15	5.10	70.0	13.212	115/208-230	9
		1800	56	**00118ES1RFD56-S**	**$394**	R1	40	1.15	6.80	71.0	13.901	115/230	4,9
		1800	56	**00118ES1B56-S**	**$401**	F1	39	1.15	6.80	71.9	13.902	115/208-230	9
		1800	143/5T	**00118ES1RFD143T-S**	**$400**	R1	40	1.15	6.80	71.0	13.901	115/230	4,9
		1800	143/5T	**00118ES1E143T-S**	**$531**	RS	42	1.15	3.40	71.0	13.970	208-230/460	9
1.5	1.1	3600	56	**00156ES1B56-S**	**$432**	F1	39	1.15	6.60	75.0	13.902	115/208-230	9
		3600	56	**00156ES1BOL56-S**	**$463**	F1	39	1.15	6.60	75.0	13.902	115/208-230	4,9
		3600	143/5T	**00156ES1B143T-S**	**$602**	RS	40	1.15	6.60	75.0	13.970	115/208-230	9
		1800	56H	**00158ES1RFD56H-S**	**$502**	R1	51	1.15	7.50	77.0	15.083	115/230	4,9
		1800	56H	**00158ES1B56-S**	**$456**	F1	40	1.15	7.50	77.0	15.083	115/208-230	9
		1800	143/5T	**00158ES1RFD145T-S**	**$504**	R1	50	1.15	7.48	77.0	15.083	115/230	4,9
		1800	143/5T	**00158ES1B145T-S**	**$612**	RS	48	1.15	7.50	77.0	15.152	115/208-230	9
		1800	143/5T	**00158ES1E145T-S**	**$611**	RS	48	1.15	3.70	77.0	15.152	208-230/460	9
		1200	182T	**00152ES1E182T-W22**	**$1,100**	W1	97	1.15	4.90	75.0	16.050	208-230/460	39

continued on next page

Please refer to inside back cover for description of "NOTES"

For detailed specifications, data sheets, drawings and performance curves visit http://www.weg.net

Data subject to change without notice.

Single-Phase General Purpose Motors

TEFC - Foot Mount - *continued*

HP	kW	RPM	Frame	Catalog Number	List Price	Mult. Symbol	Approx. Shipping Weight (lbs)	Service Factor	FL Amps @ High	FL. Eff (%)	"C" Dimension (in)	Voltage (V)	Notes
2	1.5	3600	56	**00236ES1BOL56-S**	**$592**	F1	44	1.15	8.70	77.0	14.295	115/208-230	4,9
		3600	56H	**00236ES1B56-S**	**$561**	F1	44	1.15	8.70	77.0	14.295	115/208-230	9
		3600	143/5T	**00236ES1E145T-S**	**$640**	RS	43	1.15	4.40	77.0	14.365	208-230/460	9
		3600	143/5T	**00236ES1B145T-S**	**$641**	RS	43	1.15	8.70	77.0	14.365	115/208-230	9
		1800	56H	**00218ES1RFD56H-S**	**$529**	R1	56	1.15	10.0	78.5	15.870	115/230	4,9
		1800	143/5T	**00218ES1RFD145T-S**	**$578**	R1	57	1.15	10.0	78.5	15.870	115/230	4,9
		1800	143/5T	**00218ES1E145T-S**	**$615**	RS	56	1.15	5.00	78.5	15.938	208-230/460	9
		1800	143/5T	**00218ES1B145T-S**	**$615**	RS	56	1.15	10.0	78.5	15.938	115/208-230	9
		1800	182/4T	**00218ES1RFD182T-W22**	**$790**	R1	108	1.15	10.0	81.0	17.244	115/230	4,39
		1200	213/5T	**00212ES1E213T-W22**	**$1,209**	W1	125	1.15	5.30	78.0	20.984	208-230/460	39
3	2.2	3600	143/5T	**00336ES1E145T-S**	**$829**	RS	53	1.15	6.40	80.0	15.545	208-230/460	9
		3600	143/5T	**00336ES1B145T-S**	**$830**	RS	53	1.15	12.7	80.0	15.545	115/208-230	9
		3600	182T	**00336ES1B182T-W22**	**$882**	W1	92	1.15	13.6	80.0	17.240	115/208-230	39
		3600	182T	**00336ES1E182T-W22**	**$879**	W1	96	1.15	6.80	80.0	16.050	208-230/460	39
		1800	184T	**00318ES1E184T-W22**	**$874**	W1	99	1.15	6.80	77.0	17.050	208-230/460	39
		1800	184T	**00318ES1C184T-W22**	**$875**	W1	99	1.15	13.6	77.0	17.050	208-230	39
		1800	182/4T	**00318ES1DFD184T-W22**	**$915**	R1	117	1.15	14.5	81.0	17.244	230	4,39
		1200	215T	**00312ES1E215T-W22**	**$1,327**	W1	170	1.15	6.70	80.0	20.984	208-230/460	39
5	3.7	3600	184T	**00536ES1E184T-W22**	**$1,038**	W1	110	1.15	10.5	83.0	17.050	208-230/460	39
		3600	184T	**00536ES1B184T-W22**	**$1,040**	W1	110	1.15	21.0	83.0	17.050	115/208-230	39
		1800	184T	**00518ES1E184T-W22**	**$1,064**	W1	118	1.15	10.7	79.0	17.050	208-230/460	39
		1800	184T	**00518ES1C184T-W22**	**$1,066**	W1	118	1.15	21.4	79.0	17.050	208-230	39
		1800	184T	**00518ES1DFD184T-W22**	**$1,074**	R1	131	1.15	21.4	79.0	17.050	230	4,39
		1800	213/5TZ	**00518ES1DFD215Z-W22**	**$1,205**	R1	136	1.15	21.4	79.0	20.984	230	4,39
		1800	213/5T	**00518ES1DFD215T-W22**	**$1,205**	R1	136	1.15	21.4	79.0	20.984	230	4,39
		1200	215T	**00512ES1E215T-W22**	**$1,588**	W1	172	1.15	11.0	80.0	19.567	208-230/460	39
7.5	5.5	3600	213T	**00736ES1E213T-W22**	**$1,548**	W1	147	1.15	14.9	86.0	18.021	208-230/460	39
		3600	213T	**00736ES1B213T-W22**	**$1,552**	W1	147	1.15	29.8	86.0	18.021	115/208-230	39
		1800	215T	**00718ES1E215T-W22**	**$1,359**	W1	164	1.15	17.0	83.0	19.567	208-230/460	39
		1800	215T	**00718ES1DFD215T-W22**	**$1,463**	R1	168	1.15	33.0	83.0	19.567	230	4,39
		1800	215TZ	**00718ES1DFD215Z-W22**	**$1,463**	R1	168	1.15	33.0	83.0	19.567	230	4,39
10	7.5	3600	215T	**01036ES1E215T-W22**	**$1,916**	W1	162	1.15	19.4	86.0	19.567	208-230/460	39
		1800	215T	**01018ES1E215T-W22**	**$1,579**	W1	188	1.15	19.5	84.0	19.567	208-230/460	39
		1800	215T	**01018ES1DFD215T-W22**	**$1,692**	R1	193	1.15	40.0	83.0	19.567	230	4,39
12.5	9.2	3600	215T	**01236ES1C215T-W22**	**$2,015**	W1	182	1.15	53.6	88.5	19.567	208-230	39
		1800	215T	**01218ES1E215T-W22**	**$1,776**	W1	205	1.15	27.2	82.5	19.462	208-230/460	4,39

Please refer to inside back cover for description of "NOTES"

For detailed specifications, data sheets, drawings and performance curves visit http://www.weg.net

Data subject to change without notice.

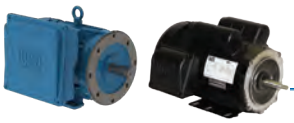

TEFC - C-Face - Foot Mount

HP	kW	RPM	Frame	Catalog Number	List Price	Mult. Symbol	Approx. Shipping Weight (lbs)	Service Factor	FL Amps @ High	FL. Eff (%)	"C" Dimension (in)	Voltage (V)	Notes
0.25	0.18	3600	W56C	**.2536ES1BW56C-S**	**$280**	F1	20	1.15	2.10	50.0	10.713	115/208-230	9
		1800	W56C	**.2518ES1BW56C-S**	**$288**	F1	20	1.15	2.30	57.0	11.106	115/208-230	9
0.33	0.25	3600	W56C	**.3336ES1BW56C-S**	**$288**	F1	22	1.15	2.60	54.0	11.106	115/208-230	9
		1800	W56C	**.3318ES1BW56C-S**	**$304**	F1	22	1.15	3.00	61.0	11.500	115/208-230	9
0.50	0.37	3600	W56C	**.5036ES1BW56C-S**	**$313**	F1	24	1.15	3.50	60.0	11.500	115/208-230	9
		1800	W56C	**.5018ES1BW56C-S**	**$333**	F1	26	1.15	4.00	64.0	11.894	115/208-230	9
		1800	W56C	**.5018ES1BOW56C-S**	**$348**	F1	24	1.15	4.00	64.0	11.894	115/208-230	3,9
		1200	56C	**.5012ES1B56C-S**	**$535**	F1	39	1.15	3.20	67.0	13.508	115/208-230	9
0.75	0.55	3600	56C	**.7536ES1B56C-S**	**$353**	F1	32	1.15	4.00	66.0	12.721	115/208-230	9
		1800	56C	**.7518ES1B56C-S**	**$370**	F1	34	1.15	5.30	68.5	13.114	115/208-230	9
		1200	56HC	**.7512ES1B56C-S**	**$669**	F1	45	1.15	4.70	70.0	14.295	115/208-230	9
1	0.75	3600	56C	**00136ES1B56C-S**	**$378**	F1	35	1.15	5.10	70.0	13.114	115/208-230	9
		1800	56C	**00118ES1B56C-S**	**$424**	F1	40	1.15	6.80	71.0	13.902	115/208-230	9
		1800	56C	**00118ES1BO56C-S**	**$439**	F1	40	1.15	6.80	71.0	13.902	115/208-230	3,9
1.5	1.1	3600	56C	**00156ES1B56C-S**	**$454**	F1	40	1.15	6.60	75.0	13.902	115/208-230	9
		1800	56HC	**00158ES1BO56C-S**	**$493**	F1	41	1.15	7.50	77.0	15.083	115/208-230	3,9
		1800	56HC	**00158ES1B56C-S**	**$478**	F1	41	1.15	7.50	77.0	15.083	115/208-230	9
2	1.5	3600	56HC	**00236ES1B56C-S**	**$589**	F1	44	1.15	8.70	77.0	14.295	115/208-230	9
		1800	143/5TC	**00218ES1B145TC-S**	**$643**	RS	52	1.15	10.0	78.5	15.938	115/208-230	9
3	2.2	3600	143/5TC	**00336ES1E145TC-S**	**$858**	RS	56	1.15	6.40	80.0	15.545	208-230/460	9
		1800	184TC	**00318ES1E184TC**	**$913**	W1	99	1.15	6.80	77.0	17.050	208-230/460	39
		1800	184TC	**00318ES1B184TC**	**$913**	W1	99	1.15	13.6	77.0	17.050	115/208-230	39
		1800	184TC	**00318ES1C184TC**	**$913**	W1	99	1.15	13.6	77.0	17.050	208-230	39
5	3.7	3600	184TC	**00536ES1E184TC**	**$1,077**	W1	109	1.15	10.5	83.0	17.050	208-230/460	39
		1800	184TC	**00518ES1E184TC**	**$1,103**	W1	118	1.15	10.7	79.0	17.050	208-230/460	39
		1800	184TC	**00518ES1C184TC-W22**	**$1,103**	W1	118	1.15	21.4	79.0	17.050	208-230	39
7.5	5.5	3600	213TC	**00736ES1E213TC-W22**	**$1,598**	W1	147	1.15	14.9	86.0	18.021	208-230/460	39
		1800	215TC	**00718ES1E215TC**	**$1,410**	W1	166	1.15	17.0	83.0	19.567	208-230/460	39
10	7.5	3600	215TC	**01036ES1E215TC**	**$1,970**	W1	164	1.15	19.4	86.0	19.567	208-230/460	39
		1800	215TC	**01018ES1E215TC**	**$1,633**	W1	190	1.15	19.5	84.0	19.567	208-230/460	39
12.5	9.2	1800	215TC	**01218ES1E215TC**	**$1,827**	W1	202	1.15	24.0	84.0	19.567	208-230/460	39

Please refer to inside back cover for description of "NOTES"

For detailed specifications, data sheets, drawings and performance curves visit http://www.weg.net

Data subject to change without notice.

Single-Phase General Purpose Motors

TEFC - C-Face - Footless

HP	kW	RPM	Frame	Catalog Number	List Price	Mult. Symbol	Approx. Shipping Weight (lbs)	Service Factor	FL Amps @ High	FL. Eff (%)	"C" Dimension (in)	Voltage (V)	Notes
0.33	0.25	3600	W56C	**.3336ES1BW56CFL-S**	**$288**	F1	21	1.15	2.60	53.0	11.106	115/208-230	9,20
		1800	W56C	**.3318ES1BW56CFL-S**	**$304**	F1	22	1.15	3.00	61.0	11.500	115/208-230	9,20
0.50	0.37	3600	W56C	**.5036ES1BW56CFL-S**	**$313**	F1	24	1.15	3.50	60.0	11.500	115/208-230	9,20
		1800	W56C	**.5018ES1BW56CFL-S**	**$333**	F1	24	1.15	4.00	64.0	11.894	115/208-230	9,20
		1200	56C	**.5012ES1B56CFL-S**	**$535**	F1	38	1.15	3.20	71.0	13.508	115/208-230	9,20
0.75	0.55	3600	56C	**.7536ES1B56CFL-S**	**$353**	F1	31	1.15	4.00	66.0	12.721	115/208-230	9,20
		1800	56C	**.7518ES1B56CFL-S**	**$370**	F1	34	1.15	5.30	68.5	13.114	115/208-230	9,20
		1200	56C	**.7512ES1B56CFL-S**	**$669**	F1	44	1.15	4.70	70.0	14.295	115/208-230	9,20
1	0.75	3600	56C	**00136ES1B56CFL-S**	**$378**	F1	35	1.15	5.10	70.0	13.114	115/208-230	9,20
		1800	56C	**00118ES1B56CFL-S**	**$424**	F1	39	1.15	6.80	71.0	13.902	115/208-230	9,20
		1800	143/5TC	**00118ES1ER143TC-S**	**$559**	RS	43	1.15	3.40	71.0	13.970	208-230/460	9,15
1.5	1.1	3600	56C	**00156ES1B56CFL-S**	**$454**	F1	39	1.15	6.60	75.0	13.902	115/208-230	9,20
		1800	56C	**00158ES1B56CFL-S**	**$478**	F1	40	1.15	7.50	77.0	15.083	115/208-230	9,20
2	1.5	3600	56C	**00236ES1B56CFL-S**	**$589**	F1	43	1.15	8.70	77.0	14.295	115/208-230	9,20
3	2.2	1800	184TC	**00318ES1ER184TC**	**$912**	W1	98	1.15	6.80	77.0	17.050	208-230/460	15,39

TEFC - Foot Mount - Thermally Protected

HP	kW	RPM	Frame	Catalog Number	List Price	Mult. Symbol	Approx. Shipping Weight (lbs)	Service Factor	FL Amps @ High	FL. Eff (%)	"C" Dimension (in)	Voltage (V)	Notes
0.33	0.25	1800	W56	**.3318ES1RFDW56-S**	**$284**	R1	22	1.15	3.00	61.0	11.500	115/230	4,9
0.50	0.37	3600	W56	**.5036ES1BOLW56-S**	**$316**	F1	24	1.15	3.50	60.0	11.500	115/208-230	4,9
		1800	W56	**.5018ES1RFDW56-S**	**$308**	R1	25	1.15	4.00	64.0	11.894	115/230	4,9
0.75	0.55	3600	56	**.7536ES1BOL56-S**	**$329**	F1	31	1.15	4.00	66.0	12.721	115/208-230	4,9
		1800	56	**.7518ES1RFD56-S**	**$357**	R1	34	1.15	5.30	68.5	13.114	115/230	4,9
1	0.75	3600	56	**00136ES1BOL56-S**	**$408**	F1	35	1.15	5.10	70.0	13.114	115/208-230	4,9
		1800	56	**00118ES1RFD56-S**	**$394**	R1	40	1.15	6.80	71.0	13.901	115/230	4,9
		1800	143/5T	**00118ES1RFD143T-S**	**$400**	R1	40	1.15	6.80	71.0	13.901	115/230	4,9
1.5	1.1	3600	56	**00156ES1BOL56-S**	**$463**	F1	39	1.15	6.60	75.0	13.902	115/208-230	4,9
		1800	56H	**00158ES1RFD56H-S**	**$502**	R1	51	1.15	7.50	77.0	15.083	115/230	4,9
		1800	143/5T	**00158ES1RFD145T-S**	**$504**	R1	50	1.15	7.48	77.0	15.083	115/230	4,9
2	1.5	3600	56	**00236ES1BOL56-S**	**$592**	F1	44	1.15	8.70	77.0	14.295	115/208-230	4,9
		1800	56H	**00218ES1RFD56H-S**	**$529**	R1	56	1.15	10.0	78.5	15.870	115/230	4,9
		1800	143/5T	**00218ES1RFD145T-S**	**$578**	R1	57	1.15	10.0	78.5	15.870	115/230	4,9
		1800	W182/4T	**00218ES1RFD182T-W22**	**$790**	R1	89	1.15	10.0	81.0	17.244	115/230	4,39
3	2.2	1800	W182/4T	**00318ES1DFD184T-W22**	**$915**	R1	93	1.15	14.5	81.0	17.244	230	4,39
5	3.7	1800	184T	**00518ES1DFD184T-W22**	**$1,074**	R1	119	1.15	21.4	79.0	17.050	230	4,39
		1800	W213/5T	**00518ES1DFD215T-W22**	**$1,205**	R1	136	1.15	21.4	79.0	20.984	230	4,39
		1800	W213/5TZ	**00518ES1DFD215Z-W22**	**$1,205**	R1	136	1.15	21.4	79.0	20.984	230	4,39
7.5	5.5	1800	215T	**00718ES1DFD215T-W22**	**$1,463**	R1	168	1.15	33.0	83.0	19.567	230	4,39
		1800	215TZ	**00718ES1DFD215Z-W22**	**$1,463**	R1	168	1.15	33.0	83.0	19.567	230	4,39
10	7.5	1800	215T	**01018ES1DFD215T-W22**	**$1,692**	R1	193	1.15	40.0	83.0	19.567	230	4,39

Please refer to inside back cover for description of "NOTES"

For detailed specifications, data sheets, drawings and performance curves visit http://www.weg.net

Data subject to change without notice.

Single-Phase General Purpose Motors

ODP - Foot Mount

HP	kW	RPM	Frame	Catalog Number	List Price	Mult. Symbol	Approx. Shipping Weight (lbs)	Service Factor	FL Amps @ High	FL. Eff (%)	"C" Dimension (in)	Voltage (V)	Notes
0.12	0.09	1800	48	.12180S1B48-S	$201	F1B	18	1.40	1.40	50.0	9.098	115/208-230	9
0.16	0.12	3600	48	.16360S1B48-S	$216	F1B	21	1.35	1.40	53.0	9.098	115/208-230	9
		1800	48	.16180S1B48-S	$208	F1B	22	1.35	1.70	53.0	9.098	115/208-230	9
0.25	0.18	3600	48	.25360T1B48-S	$253	F2B	19	1.35	1.30	66.6	9.492	115/208-230	9
		3600	W56	.25360T1BW56-S	$253	F2B	19	1.35	1.30	66.6	9.866	115/208-230	9
		1800	48	.25180T1B48-S	$241	F2B	18	1.35	1.60	68.5	9.492	115/208-230	9
		1800	W56	.25180T1BW56-S	$241	F2B	19	1.35	1.60	68.5	9.866	115/208-230	9
0.33	0.25	3600	48	.33360T1B48-S	$256	F2B	23	1.35	1.60	70.5	9.886	115/208-230	9
		1800	48	.33180T1B48-S	$275	F2B	20	1.35	2.10	72.4	9.886	115/208-230	9
		1800	W56	.33180T1BW56-S	$275	F2B	21	1.35	2.10	72.4	10.260	115/208-230	9
0.50	0.37	3600	48	.50360T1B48-S	$276	F2B	23	1.25	2.40	72.4	9.886	115/208-230	9
		3600	W56	.50360S1BCDW56-S	$224	C1S	28	1.00	3.10	63.0	9.866	115/208-230	1,4,6,9
		3600	W56	.50360T1BW56-S	$282	F2B	24	1.25	2.40	72.4	10.260	115/208-230	9
		1800	48	.50180T1B48-S	$318	F2B	23	1.25	2.80	76.2	10.280	115/208-230	9
		1800	W56	.50180T1BW56-S	$307	F2B	23	1.25	2.80	76.2	10.654	115/208-230	9
0.75	0.55	3600	W56	.75360S1BCDW56-S	$237	C1S	22	1.00	4.30	68.5	10.260	115/208-230	1,4,6,9
		3600	56	.75360T1B56-S	$320	F2B	30	1.25	3.40	76.2	11.890	115/208-230	9
		1800	56	.75180T1B56-S	$387	F2B	38	1.25	3.40	81.8	11.890	115/208-230	9
1	0.75	3600	56	001360S1BCD56-S	$278	C1S	36	1.00	6.60	67.0	11.102	115/208-230	1,4,6,9
		3600	56	001360T1B56-S	$347	F2B	35	1.25	4.30	80.4	11.890	115/208-230	9
		1800	56	001180T1B56-S	$421	F2B	41	1.15	4.50	82.6	12.677	115/208-230	9
		1800	56	001180T1B056-S	$438	F2B	41	1.15	4.50	82.6	12.677	115/208-230	3,9
1.5	1.1	3600	56	001560S1BCD56-S	$311	C1S	40	1.00	8.70	68.0	11.496	115/208-230	1,4,6,9
		3600	56	001560T1B56-S	$393	F2B	38	1.15	6.20	81.5	12.284	115/208-230	9
		1800	56H	001580T1B56-S	$523	F2B	49	1.15	6.80	83.8	13.071	115/208-230	9
		1800	56H	001580T1B056-S	$541	F2B	50	1.15	6.80	83.8	13.465	115/208-230	3,9
2	1.5	3600	56H	002360S1BCD56-S	$372	C1S	34	1.00	8.90	70.0	11.890	115/208-230	1,4,6,9
		3600	56H	002360T1B56-S	$485	F2B	43	1.15	8.40	82.9	12.677	115/208-230	9
		1800	56H	002180T1B56-S	$626	F2B	54	1.15	9.30	84.5	13.465	115/208-230	9
3	2.2	3600	56H	003360S1CCD56-S	$432	C1S	41	1.00	12.7	80.0	12.677	208-230	1,4,6,9
		3600	56H	003360T1B56-S	$568	F2B	52	1.15	12.2	84.1	13.465	115/208-230	9
		3600	182T	003360S1B182T	$607	W1B	91	1.25	15.0	81.5	14.448	115/208-230	39
		3600	182T	003360S1C182T	$606	W1B	91	1.25	15.0	81.5	14.448	208-230	39
		1800	184T	003180S1B184T	$690	W1B	105	1.25	17.5	75.0	14.870	115/208-230	39
		1800	184T	003180S1C184T	$690	W1B	105	1.25	17.5	75.0	14.870	208-230	39
		1800	184T	003180S1CCD0L184T	$687	C1	99	1.15	17.5	75.0	14.875	208-230	4,6,39

continued on next page

Please refer to inside back cover for description of "NOTES"

For detailed specifications, data sheets, drawings and performance curves visit http://www.weg.net

Data subject to change without notice.

Single-Phase General Purpose Motors

ODP - Foot Mount - *continued*

HP	kW	RPM	Frame	Catalog Number	List Price	Mult. Symbol	Approx. Shipping Weight (lbs)	Service Factor	FL Amps @ High	FL. Eff (%)	"C" Dimension (in)	Voltage (V)	Notes
5	3.7	3600	56H	00536OS1DCD56H-S	$458	C1S	53	1.00	20.3	80.0	13.465	230	1,4,6,9
		3600	56HZ	00536OS1DCD56HZ-S	$481	C1S	53	1.00	20.3	80.0	13.533	230	1,4,5,6,9
		3600	W182/4Y	00536OS1CCDW184Y-S	$526	C1S	56	1.00	20.7	80.0	15.905	208-230	1,4,5,6,9
		3600	184T	00536OS1B184T	$863	W1B	110	1.25	21.0	81.5	14.870	115/208-230	39
		3600	184T	00536OS1C184T	$863	W1B	110	1.25	21.0	81.5	14.870	208-230	39
		3600	184T	00536OS1D184T	$862	W1B	110	1.25	21.0	81.5	14.870	230	39
		1800	184T	00518OS1C184T	$725	W1B	107	1.25	22.0	82.5	14.870	208-230	39
		1800	184T	00518OS1CCD0L184T	$721	C1	101	1.15	21.5	82.5	14.875	208-230	4,6,39
		1800	184T	00518OS1CCD184T	$682	C1	102	1.25	21.5	82.5	14.875	208-230	6,10,39
7.5	5.5	3600	184T	00736OS1C184T	$961	W1B	120	1.25	30.0	85.0	14.870	208-230	39
		1800	213/5T	00718OS1F215T	$961	W1B	130	1.15	15.3	85.0	19.660	230/460	5,9,28
		1800	215T	00718OS1CCD215T	$961	C1	129	1.15	31.3	84.5	19.660	208-230	5,6,9,28
10	7.5	1800	215T	01018OS1CCD215T	$1,468	C1	162	1.15	43.0	85.0	21.235	208-230	5,6,9,28

ODP - Resilient Base

HP	kW	RPM	Frame	Catalog Number	List Price	Mult. Symbol	Approx. Shipping Weight (lbs)	Service Factor	FL Amps @ High	FL. Eff (%)	"C" Dimension (in)	Voltage (V)	Notes
0.16	0.12	1800	48Z	.16180S1ASPRBO48Z-S	$272	F1B	21	1.35	3.00	50.5	10.138	115	3,9,13,16
		1800	48Z	.16180S1ASPRB48Z-S	$260	F1B	21	1.35	3.00	50.5	10.138	115	9,13,16
0.25	0.18	1800	48Z	.25180S1BSPRBO48Z-S	$274	F1B	22	1.35	2.10	55.0	10.138	115/208-230	3,9,13,16
		1800	48Z	.25180S1ASPRBO48Z-S	$274	F1B	22	1.35	4.30	55.0	10.138	115	3,9,13,16
		1800	48Z	.25180S1ASPRB48Z-S	$262	F1B	22	1.35	4.30	55.0	10.138	115	9,13,16
0.33	0.25	1800	48Z	.33180S1BSPRBO48Z-S	$284	F1B	24	1.35	2.60	60.8	10.138	115/208-230	3,9,13,16
		1800	48Z	.33180S1BSPRB48Z-S	$272	F1B	24	1.35	2.60	60.8	10.138	115/208-230	9,13,16
		1800	W56	.33180S1BSPRBOW56-S	$288	F1B	25	1.35	2.60	62.0	10.138	115/208-230	3,9,13,16
		1800	W56	.33180S1BSPRBW56-S	$276	F1B	25	1.35	2.60	62.0	10.138	115/208-230	9,13,16
		1800	W56	.33180T1BRBOW56-S	$325	F2B	24	1.35	2.10	72.4	10.925	115/208-230	3,9,13
0.50	0.37	1800	48Z	.50180S1BSPRBO48Z-S	$311	F1B	29	1.25	3.70	63.5	10.925	115/208-230	3,9,13,16
		1800	48Z	.50180S1BSPRB48Z-S	$299	F1B	29	1.25	3.70	63.5	10.925	115/208-230	9,13,16
		1800	W56	.50180S1BSPRBOW56-S	$316	F1B	30	1.25	3.70	63.5	10.945	115/208-230	3,9,13,16
		1800	W56	.50180S1BSPRBW56-S	$304	F1B	30	1.25	3.70	63.5	10.945	115/208-230	9,13,16
		1800	W56	.50180T1BRBOW56-S	$368	F2B	26	1.25	2.75	76.2	11.319	115/208-230	3,9,13
0.75	0.55	1800	56	.75180T1BRBO56-S	$434	F2B	38	1.25	3.40	81.8	12.402	115/208-230	3,9,13
1	0.75	1800	56	00118OT1BRBO56-S	$468	F2B	43	1.15	4.50	82.6	13.189	115/208-230	3,9,13
1.5	1.1	3600	56	00156OT1BRBO56-S	$450	F2B	39	1.15	6.20	81.5	12.795	115/208-230	3,9,13
		1800	56H	00158OT1BRBO56-S	$570	F2B	50	1.15	6.80	83.8	13.583	115/208-230	3,9,13
2	1.5	1800	56H	00218OT1BRBO56H-S	$616	F2B	57	1.15	9.30	84.5	14.373	115/208-230	3,9,13

Please refer to inside back cover for description of "NOTES"

For detailed specifications, data sheets, drawings and performance curves visit http://www.weg.net

Data subject to change without notice.

Single-Phase General Purpose Motors

ODP - C-Face - Foot Mount

HP	kW	RPM	Frame	Catalog Number	List Price	Mult. Sym-bol	Approx. Shipping Weight (lbs)	Service Factor	FL Amps @ High	FL. Eff (%)	"C" Dimension (in)	Voltage (V)	Notes
0.12	0.09	1800	48CH	.12180S1B48CH-S	$222	F1B	18	1.40	1.40	50.0	9.098	115/208-230	9
0.16	0.12	3600	48CH	.16360S1B48CH-S	$237	F1B	21	1.35	1.40	53.0	9.098	115/208-230	9
		1800	48CH	.16180S1B48CH-S	$231	F1B	22	1.35	1.70	53.0	9.098	115/208-230	9
0.25	0.18	3600	48CH	.25360T1B48CH-S	$277	F2B	19	1.35	1.30	66.6	9.492	115/208-230	9
		3600	W56C	.25360T1BW56C-S	$281	F2B	19	1.35	1.30	66.6	9.866	115/208-230	9
		1800	48CH	.25180T1B48CH-S	$269	F2B	18	1.35	1.60	68.5	9.492	115/208-230	9
		1800	W56C	.25180T1BW56C-S	$269	F2B	19	1.35	1.60	68.5	9.866	115/208-230	9
0.33	0.25	3600	48CH	.33360T1B48CH-S	$282	F2B	23	1.35	1.60	70.5	9.886	115/208-230	9
		3600	W56C	.33360T1BW56C-S	$285	F2B	23	1.35	1.60	70.5	10.260	115/208-230	9
		1800	48CH	.33180T1B48CH-S	$299	F2B	20	1.35	2.10	72.4	9.886	115/208-230	9
		1800	W56C	.33180T1BW56C-S	$303	F2B	21	1.35	2.10	72.4	10.260	115/208-230	9
0.50	0.37	3600	48CH	.50360T1B48CH-S	$300	F2B	23	1.25	2.40	72.4	9.886	115/208-230	9
		3600	W56C	.50360T1BW56C-S	$310	F2B	24	1.25	2.40	72.4	10.260	115/208-230	9
		1800	W56C	.50180T1BOW56C-S	$352	F2B	24	1.25	2.80	76.2	10.654	115/208-230	3,9
		1800	W56C	.50180T1BW56C-S	$335	F2B	24	1.25	2.80	76.2	10.654	115/208-230	9
0.75	0.55	3600	56C	.75360T1B56C-S	$348	F2B	30	1.25	3.40	76.2	11.890	115/208-230	9
		1800	56C	.75180T1B56C-S	$415	F2B	38	1.25	3.40	81.8	11.890	115/208-230	9
1	0.75	3600	56C	001360T1B56C-S	$375	F2B	35	1.25	4.30	80.4	11.890	115/208-230	9
		1800	56C	001180T1B56C-S	$449	F2B	41	1.15	4.50	82.6	12.677	115/208-230	9
1.5	1.1	3600	56C	001560T1B56C-S	$421	F2B	38	1.15	6.20	81.5	12.284	115/208-230	9
		1800	56HC	001580T1B56C-S	$551	F2B	49	1.15	6.80	83.8	13.071	115/208-230	9
2	1.5	3600	56HC	002360T1B56C-S	$513	F2B	43	1.15	8.40	82.9	12.677	115/208-230	9
		1800	56HC	002180T1B56C-S	$654	F2B	54	1.15	9.30	84.5	13.465	115/208-230	9
3	2.2	3600	56HC	003360T1B56C-S	$596	F2B	52	1.15	12.2	84.1	13.465	115/208-230	9

Please refer to inside back cover for description of "NOTES"

For detailed specifications, data sheets, drawings and performance curves visit http://www.weg.net

Data subject to change without notice.

Single-Phase General Purpose Motors

ODP - C-Face - Footless

HP	kW	RPM	Frame	Catalog Number	List Price	Mult. Symbol	Approx. Shipping Weight (lbs)	Service Factor	FL Amps @ High	FL. Eff (%)	"C" Dimension (in)	Voltage (V)	Notes
0.33	0.25	3600	W56C	.33360T1BW56CFL-S	$285	F2B	23	1.35	1.60	70.5	10.260	115/208-230	9,20
		3600	W56C	.33360T1BOW56CFL-S	$302	F2B	23	1.35	1.60	70.5	10.260	115/208-230	3,9,20
		1800	W56C	.33180T1BW56CFL-S	$303	F2B	20	1.35	2.10	72.4	10.260	115/208-230	9,20
0.50	0.37	3600	W56C	.50360T1BOW56CFL-S	$327	F2B	23	1.25	2.40	72.4	10.260	115/208-230	3,9,20
		3600	W56C	.50360T1BW56CFL-S	$310	F2B	23	1.25	2.40	72.4	10.260	115/208-230	9,20
		1800	W56C	.50180T1BW56CFL-S	$335	F2B	23	1.25	2.80	76.2	10.654	115/208-230	9,20
0.75	0.55	3600	56C	.75360T1BO56CFL-S	$365	F2B	29	1.25	3.40	76.2	11.890	115/208-230	3,9,20
		3600	56C	.75360T1B56CFL-S	$348	F2B	29	1.25	3.40	76.2	11.890	115/208-230	9,20
		1800	56C	.75180T1B56CFL-S	$415	F2B	38	1.25	3.40	81.8	11.890	115/208-230	9,20
1	0.75	3600	56C	00136OT1B56CFL-S	$375	F2B	35	1.25	4.30	80.4	11.890	115/208-230	9,20
		3600	56C	00136OT1BO56CFL-S	$392	F2B	35	1.25	4.30	80.4	11.890	115/208-230	3,9,20
		1800	56C	00118OT1B56CFL-S	$449	F2B	41	1.15	4.50	82.6	12.677	115/208-230	9,20
1.5	1.1	3600	56C	00156OT1B56CFL-S	$421	F2B	38	1.15	6.20	81.5	12.284	115/208-230	9,20
		3600	56C	00156OT1BO56CFL-S	$438	F2B	38	1.15	6.20	81.5	12.284	115/208-230	3,9,20,51
		1800	56C	00158OT1B56CFL-S	$551	F2B	48	1.15	6.80	83.8	13.071	115/208-230	9,20
2	1.5	3600	56C	00236OT1B56CFL-S	$513	F2B	43	1.15	8.40	82.9	12.677	115/208-230	9,20
		3600	56C	00236OT1BO56CFL-S	$530	F2B	43	1.15	8.40	82.9	12.677	115/208-230	3,9,20,51
		1800	56C	00218OT1B56CFL-S	$654	F2B	54	1.15	9.30	84.5	13.465	115/208-230	9,20
3	2.2	3600	56C	00336OT1BO56CFL-S	$613	F2B	51	1.15	12.2	84.1	13.465	115/208-230	3,9,20
		3600	56C	00336OT1B56CFL-S	$596	F2B	51	1.15	12.2	84.1	13.465	115/208-230	9,20

ODP - Foot Mount - Thermally Protected

HP	kW	RPM	Frame	Catalog Number	List Price	Mult. Symbol	Approx. Shipping Weight (lbs)	Service Factor	FL Amps @ High	FL. Eff (%)	"C" Dimension (in)	Voltage (V)	Notes
0.50	0.37	3600	W56	.50360S1BCDW56-S	$224	C1S	28	1.00	3.10	63.0	9.866	115/208-230	1,4,6,9
0.75	0.55	3600	W56	.75360S1BCDW56-S	$237	C1S	22	1.00	4.30	68.5	10.260	115/208-230	1,4,6,9
1	0.75	3600	56	00136OS1BCD56-S	$278	C1S	36	1.00	6.60	67.0	11.102	115/208-230	1,4,6,9
		1800	56	00118OT1BO56-S	$438	F2B	41	1.15	4.50	82.6	12.677	115/208-230	3,9
1.5	1.1	3600	56	00156OS1BCD56-S	$311	C1S	40	1.00	8.70	68.0	11.496	115/208-230	1,4,6,9
		1800	56H	00158OT1BO56-S	$541	F2B	50	1.15	6.80	83.8	13.465	115/208-230	3,9
2	1.5	3600	56H	00236OS1BCD56-S	$372	C1S	34	1.00	8.90	70.0	11.890	115/208-230	1,4,6,9
3	2.2	3600	56H	00336OS1CCD56-S	$432	C1S	41	1.00	12.7	80.0	12.677	208-230	1,4,6,9
5	3.7	3600	56H	00536OS1DCD56H-S	$458	C1S	53	1.00	20.3	80.0	13.465	230	1,4,6,9
		3600	56HZ	00536OS1DCD56HZ-S	$481	C1S	53	1.00	20.3	80.0	13.533	230	1,4,5,6,9
		3600	W182/4Y	00536OS1CCDW184Y-S	$526	C1S	56	1.00	20.7	80.0	15.152	208-230	1,4,5,6,9

Please refer to inside back cover for description of "NOTES"

For detailed specifications, data sheets, drawings and performance curves visit http://www.weg.net

Data subject to change without notice.

THE WORLD ASKS FOR RELIABILITY.
WEG DELIVERS SOLUTIONS YOU CAN COUNT ON.

When the world asks for a supplier they can depend on, WEG delivers by putting our customers first in everything we do.
We listen and understand their needs and make sure we deliver the right solution, as promised and on time.

www.weg.net
1-800-ASK-4WEG

TEFC – Foot Mount A-32
TEFC – C-Face – Foot Mount A-42
TEFC – C-Face – Footless A-46
ODP – Foot Mount. A-50
ODP – C-Face – Foot Mount A-56
ODP – C-Face – Footless A-60
ODP – Resilient Base A-60
TEFC – Foot Mount and C-Face Foot Mount with Internal AEGIS® SGR. A-61
ODP – Foot Mount and C-Face Foot Mount with Internal AEGIS® SGR A-66

IEEE 841 – Three-Phase

TEFC – Foot Mount – NEMA Premium® A-70
TEFC – C-Face – Foot Mount – NEMA Premium® A-74
TEFC – C-Face – Footless – NEMA Premium®. A-75

BRAKE MOTORS – Three-Phase

TEFC – Foot Mount – Cast Iron A-77
TEFC – Foot Mount – Rolled Steel. A-79
TEFC – C-Face – Foot Mount – Rolled Steel A-79
TEFC – C-Face – Footless – Rolled Steel. A-79

W23 Sync+ Permanent Magnet Motor

W23 Sync+ Permanent Magnet Motor A-81

IEC TRU-METRIC™ - Three-Phase

TEFC – Foot Mount A-84
TEFC – Foot Mount (IE4) A-87
TEFC – Foot Mount – (FF) B5 D-Flange Style A-87

Integrated Solutions

Integrated Solution (NEMA TEFC W22 + MW500) A-88

Three Phase General Purpose Motors

W22 - CAST IRON

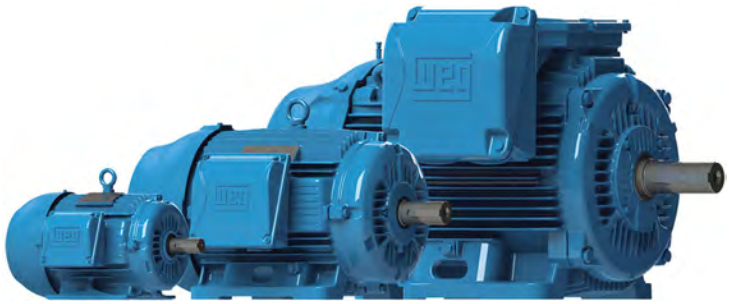

Standard Features:

- 50/60 Hz rated (380V on nameplate - 400/415 available)
- Rated 50HZ at same horsepower up to 250HP 1.0 Service Factor for 2, 4 & 6 pole motors
- Rated 50Hz at same horsepower up to 125HP 1.0 Service Factor for 8 pole motors
- Class F insulation (impregnation resin and magnet wire are class H)
- F1 mounted (cast iron frames are F2 convertible). Frames 447T and up can easily be F2 converted by simply rotating the terminal box adapter
- Cast iron frames: regreasable ball bearings (frames 254T and up)
- Gasketed conduit box

Inverter Rated*

1000:1 for Variable Torque

NEMA Premium®

20:1 Constant Torque up to 250HP

6:1 Constant Torque 300HP and up

*** Insulated NDE housing standard on L447/9T and above**

Features that make a difference:

- All NEMA Premium® ratings have a 1.25 Service Factor (up to 100 HP) resulting in cooler operation and extended life of the motor
- All Cast Iron Construction, including Terminal Box and Fan Cover*
- Solid feet for reduced vibration levels and impact absorption
- Optimized ventilation system for cooler operation and extended life
- High Grade FC200 cast iron provides superior mechanical strength and heat dissipation
- All WEG W22 motors are Totally Enclosed Fan Cooled with a true IP55 rating against dust and moisture. (IP56, IP65 and IP66 available as options)
- Exclusive W-Seal 364T and larger provides superior bearing protection
- Taconite Labyrinth seal 586 Frame and larger
- Exclusive WEG painting system exceed 200hrs ASTM 117 corrosion test (Exceeds IEEE 841 standard)
- Balanced to 0.08 inches per second vibration limits (Meets IEEE 841 standard)
- Four Bolt Conduit Cover with glued Neoprene Gasket
- Impregnation Resin and magnet wire are insulation class H
- Stainless Steel Nameplate - Laser etched with high contrast background
- Corrosion Proof Drains
- Inverter Duty per NEMA MG1, Part 31
- Certified Class I Div 2, Groups A, B, C & D, Class II, Div 2, Groups F & G
- Suitable for IEEE45 and USCG 259 – Marine Duty

*Cast iron fan cover available as an option on 143-215T frames

Please refer to back cover for description of "NOTES"

For detailed specifications, data sheets, drawings and performance curves visit http://www.weg.net

W22

TEFC - Cast Iron

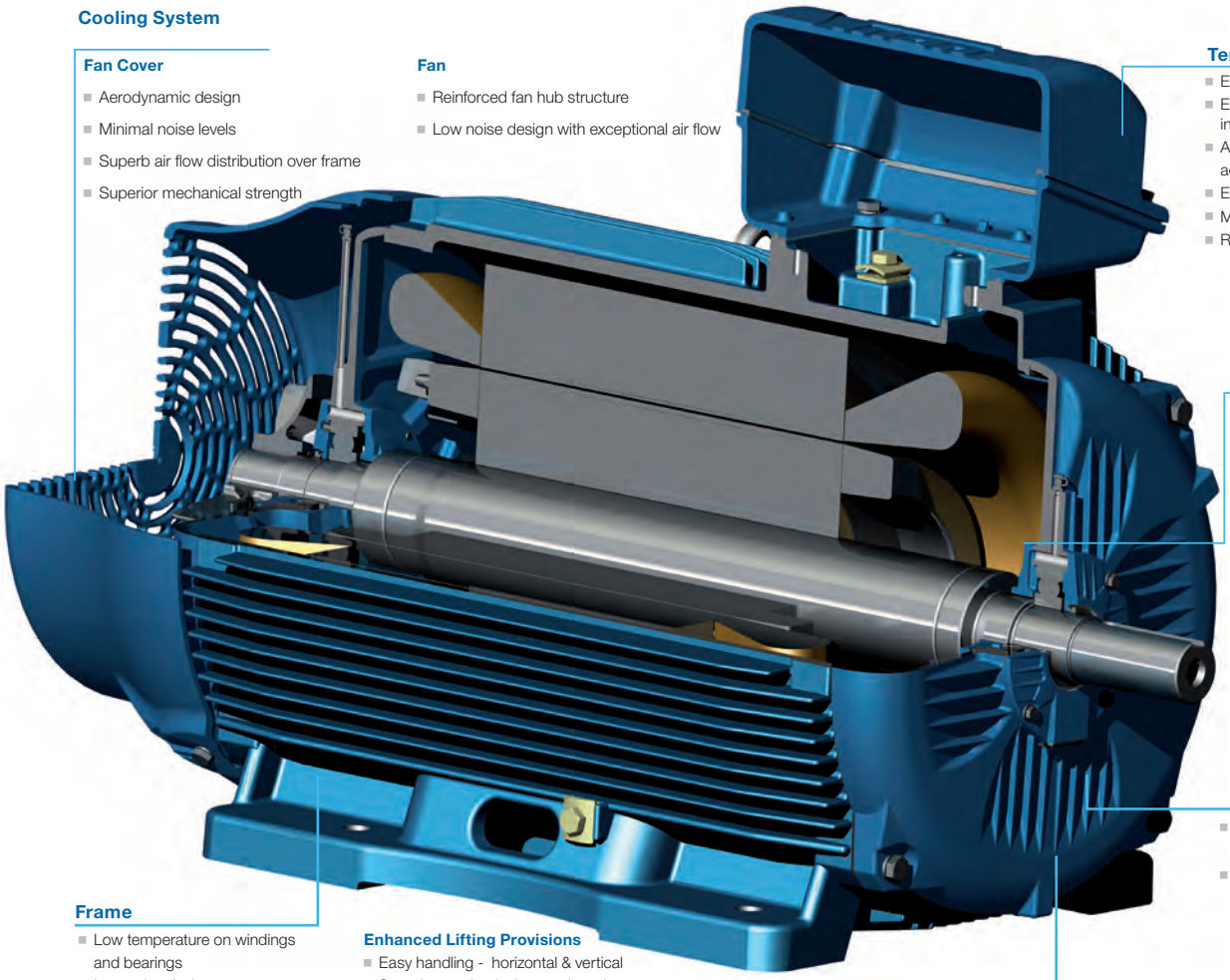

Cooling System

Fan Cover
- Aerodynamic design
- Minimal noise levels
- Superb air flow distribution over frame
- Superior mechanical strength

Fan
- Reinforced fan hub structure
- Low noise design with exceptional air flow

Terminal Box
- Excellent connection quality
- Easy cable handling during installation
- Ample space available for accessory installation
- Easy to maintain
- Mounting F1/F2/F3
- Rotation on 90° stages

Bearing Caps

External
- Finned surface for superb bearing heat dissipation

Internal
- Positive pressure lubrication system
- High quality bearing lubrication
- Reduced bearing temperature

Seal Subsystem
- Excellent dust and moisture protection
- Excellent protection to high-pressure cleaning

Frame
- Low temperature on windings and bearings
- Low noise design
- Terminal box position outlet on top 447T and larger

Pad for vibration sensor
- Displaced 90º from each other

Enhanced Lifting Provisions
- Easy handling - horizontal & vertical
- Superior mechanical strength and handling safety

Solid feet
- Impact resistance
- Ideal for high vibration level applications

Endshields Subsystem

DE (Drive Endshield)
- Fin design increases air flow
- Bearing moved outwards for better load support
- Bearing heat dissipation for reduced bearing temperature
- Reinforced endshield structure

NDE (Non-Drive Endshield)
- Smooth exterior surface
- Optimal air flow
- Designed for low noise
- Structural rigidity for low vibration
- Insulated housing standard on L447/9T and above

Please refer to inside back cover for description of “NOTES”

For detailed specifications, data sheets, drawings and performance curves visit http://www.weg.net

Data subject to change without notice.

Three-Phase General Purpose Motors

TEFC - ROLLED STEEL

Standard Features:

- Rated Output: 0.25 to 25 HP
- Number of Poles: 2 to 6
- Class F insulation
- Frame Sizes: NEMA 56 to 254/6T
- Frequency: 60 Hz (dual rated 50 Hz 190-220/380-415V)
- F1 mount as standard
- Foot mount / C-face / Footless availability
- Enclosure: TEFC
- Aluminum endshields
- Certified Class I, Div 2, Groups A,B,C,D
- Cast Iron flanges for improved strength (182/4TC and larger)
- Internal bolts, giving a clean surface to the motor, avoiding trapping materials and allowing easy paint job after assembly to the load if required
- Double shielded ball bearings on frames 56 to 213/5T.
- Versions: General Purpose, Jet Pump, Close-coupled Pump type “JM” and “JP”, and Crop Dryer

Optional Features:

- IP56 ingress protection
- F2 and F3 mount
- Enclosure: TEAO and TENV
- Regreasable bearings optional on 182/4T and 213/5T
- Double sealed ball bearings and/or bearing cap
- Drip cover
- Internal AEGIS® SGR
- Space heaters and thermal protection (thermostats and thermistors)
- Refer to the mod section for more options

Features that make a difference:

- New ventilation system for improved thermal performance
- Robust foot design suitable for tougher applications
- New and more robust eyebolts design (frames 182/4T and up) plus a second eyebolt on non-drive end allowing vertical lifting capability (frames 213/5T and 254/6T)
- Oversized diagonally split aluminum terminal box that exceeds IP55 requirements
- Terminal box rotatable in 90 degrees increments for flexibility during installation
- Option for internal AEGIS® SGR
- Color coded leads as standard for easy wiring
- Regreasable ball bearings on 254/6T frame as standard (optional for 182/4T and 213/5T)
- IP55 Ingress Protection as standard, being appropriate for severe environments
- Bearing cap as standard on flanged motors, optional on non flanged
- Suitable for VFD operation as per NEMA MG1 part 31.4.4.2 @ 1.0SF
- Motor frame painting system 500 hours salt spray resistant

Please refer to back cover for description of “NOTES”

For detailed specifications, data sheets, drawings and performance curves visit http://www.weg.net

TEFC - Foot Mount

HP	kW	RPM	Frame	Catalog Number	List Price	Mult. Symbol	Approx. Shipping Weight (lbs)	Service Factor	FL Amps @ High	FL. Eff (%)	"C" Dimension (in)	Voltage (V)	Notes
0.25	0.18	3600	56	.2536ES3E56-S	$237	F1	21	1.15	0.50	57.5	11.142	208-230/460	9
		1800	56	.2518ES3E56-S	$249	F1	23	1.15	0.50	70.0	11.142	208-230/460	9
0.33	0.25	3600	56	.3336ES3E56-S	$249	F1	22	1.15	0.60	62.0	11.142	208-230/460	9
		1800	56	.3318ES3E56-S	$253	F1	24	1.15	0.60	74.0	11.535	208-230/460	9
0.5	0.37	3600	56	.5036ES3E56-S	$258	F1	24	1.15	0.80	68.0	11.535	208-230/460	9
		1800	56	.5018ES3E56-S	$287	F1	26	1.15	0.90	77.0	11.535	208-230/460	9
		1800	56	.5018ES3H56-S	$288	F1	26	1.15	0.70	77.0	11.535	575	9
		1200	56	.5012ES3E56-S	$417	F1	31	1.15	1.00	72.0	12.323	208-230/460	9
0.75	0.55	3600	56	.7536ES3E56-S	$287	F1	25	1.15	1.10	72.0	11.535	208-230/460	9
		3600	56	.7536ES3H56-S	$288	F1	25	1.15	0.90	72.0	11.535	575	9
		1800	56	.7518ES3E56-S	$311	F1	28	1.15	1.20	78.5	11.929	208-230/460	9
		1200	56H	.7512ES3E56-S	$427	F1	34	1.15	1.30	75.5	12.716	208-230/460	9
1	0.75	3600	W56	00136ET3EW56-S	$392	F1	25	1.15	1.50	78.5	11.106	230/460	9
		3600	W56	00136ET3HW56-S	$392	F1	25	1.15	1.20	78.5	11.106	575	9
		3600	143/5T	00136ET3E143T-S	$420	RSP	31	1.15	1.40	78.5	13.189	230/460	9
		3600	143/5T	00136ET3H143T-S	$420	RSP	31	1.15	1.10	78.5	13.189	575	9
		3600	143/5T	00136ET3E143T-W22	$538	N1	45	1.25	1.44	81.5	13.358	230/460	
		3600	143/5T	00136ET3H143T-W22	$538	N1	44	1.25	1.15	81.5	13.358	575	
		1800	56	00118ET3E56-S	$379	F1	41	1.15	1.50	85.5	13.504	230/460	9
		1800	56	00118ET3H56-S	$379	F1	41	1.15	1.20	85.5	13.504	575	9
		1800	143/5T	00118ET3E143T-S	$459	RSP	42	1.15	1.50	85.5	13.583	230/460	9
		1800	143/5T	00118ET3H143T-S	$459	RSP	42	1.15	1.20	85.5	13.583	575	9
		1800	143/5T	00118ET3E143T-W22	$527	N1	48	1.25	1.47	85.5	13.358	230/460	
		1800	143/5T	00118ET3H143T-W22	$527	N1	48	1.25	1.18	85.5	13.358	575	
		1200	56H	00112ET3E56-S	$497	F1	42	1.15	1.60	82.5	13.504	230/460	9
		1200	143/5T	00112ET3E145T-S	$529	RSP	43	1.15	1.60	82.5	13.583	230/460	9
		1200	143/5T	00112ET3H145T-S	$529	RSP	43	1.15	1.30	82.5	13.583	575	9
		1200	143/5T	00112ET3E145T-W22	$608	N1	55	1.25	1.73	82.5	13.358	230/460	
		1200	143/5T	00112ET3H145T-W22	$608	N1	55	1.25	1.38	82.5	13.358	575	
		900	182/4T	00109ET3E182T-W22	$1,043	N1	88	1.25	2.30	78.5	15.860	230/460	
		900	182/4T	00109ET3H182T-W22	$1,043	N1	104	1.25	1.84	78.5	15.860	575	

continued on next page

Please refer to inside back cover for description of "NOTES"

For detailed specifications, data sheets, drawings and performance curves visit http://www.weg.net

Data subject to change without notice.

TEFC - Foot Mount - *continued*

HP	kW	RPM	Frame	Catalog Number	List Price	Mult. Symbol	Approx. Shipping Weight (lbs)	Service Factor	FL Amps @ High	FL. Eff (%)	"C" Dimension (in)	Voltage (V)	Notes
1.5	1.1	3600	56	00156ET3E56-S	$433	F1	37	1.15	1.90	84.0	13.109	230/460	9
		3600	143/5T	00156ET3E143T-S	$473	RSP	39	1.15	1.90	84.0	13.189	230/460	9
		3600	143/5T	00156ET3H143T-S	$473	RSP	39	1.15	1.50	84.0	13.189	575	9
		3600	143/5T	00156ET3E143T-W22	$543	N1	49	1.25	1.96	84.0	13.358	230/460	
		3600	143/5T	00156ET3H143T-W22	$543	N1	49	1.25	1.57	84.0	13.358	575	
		1800	56H	00158ET3E56-S	$435	F1	44	1.15	2.00	86.5	13.504	230/460	9
		1800	143/5T	00158ET3E145T-S	$480	RSP	43	1.15	2.00	86.5	13.583	230/460	9
		1800	143/5T	00158ET3H145T-S	$480	RSP	43	1.15	1.60	86.5	13.583	575	9
		1800	143/5T	00158ET3E145T-W22	$551	N1	53	1.25	2.02	86.5	13.358	230/460	
		1800	143/5T	00158ET3H145T-W22	$551	N1	53	1.25	1.62	86.5	13.358	575	
		1200	182/4T	00152ET3E182T-S	$656	RSP	76	1.15	2.20	87.5	16.339	230/460	9
		1200	182/4T	00152ET3H182T-S	$656	RSP	76	1.15	1.80	87.5	16.339	575	9
		1200	182/4T	00152ET3E182T-W22	$754	N1	97	1.25	2.54	87.5	15.860	230/460	
		1200	182/4T	00152ET3H182T-W22	$754	N1	97	1.25	2.03	87.5	15.860	575	
		900	182/4T	00159ET3E184T-W22	$1,207	N1	102	1.25	2.70	82.5	15.860	230/460	
		900	182/4T	00159ET3H184T-W22	$1,207	N1	102	1.25	2.16	82.5	15.860	575	
2	1.5	3600	56H	00236ET3E56-S	$489	F1	44	1.15	2.50	85.5	13.898	230/460	9
		3600	143/5T	00236ET3E145T-S	$514	RSP	45	1.15	2.50	85.5	13.976	230/460	9
		3600	143/5T	00236ET3H145T-S	$514	RSP	45	1.15	2.00	85.5	13.976	575	9
		3600	143/5T	00236ET3E145T-W22	$591	N1	54	1.25	2.56	85.5	13.358	230/460	
		3600	143/5T	00236ET3H145T-W22	$591	N1	54	1.25	2.05	85.5	13.358	575	
		1800	56H	00218ET3E56-S	$478	F1	46	1.15	2.70	86.5	13.898	230/460	9
		1800	143/5T	00218ET3E145T-S	$533	RSP	47	1.15	2.70	86.5	13.976	230/460	9
		1800	143/5T	00218ET3H145T-S	$533	RSP	47	1.15	2.20	86.5	13.976	575	9
		1800	143/5T	00218ET3E145T-W22	$612	N1	51	1.25	2.76	86.5	13.358	230/460	
		1800	143/5T	00218ET3H145T-W22	$612	N1	54	1.25	2.21	86.5	13.358	575	
		1200	182/4T	00212ET3E184T-S	$713	RSP	86	1.15	3.00	88.5	17.126	230/460	9
		1200	182/4T	00212ET3H184T-S	$713	RSP	86	1.15	2.40	88.5	17.126	575	9
		1200	182/4T	00212ET3E184T-W22	$819	N1	108	1.25	3.22	88.5	15.860	230/460	39
		1200	182/4T	00212ET3H184T-W22	$819	N1	103	1.25	2.58	88.5	15.860	575	39
		900	213/5T	00209ET3E213T-W22	$1,848	N1	171	1.25	3.39	85.5	19.517	230/460	
		900	213/5T	00209ET3H213T-W22	$1,848	N1	171	1.25	2.71	85.5	19.517	575	

continued on next page

Please refer to inside back cover for description of "NOTES"

For detailed specifications, data sheets, drawings and performance curves visit http://www.weg.net

TEFC - Foot Mount - *continued*

HP	kW	RPM	Frame	Catalog Number	List Price	Mult. Symbol	Approx. Shipping Weight (lbs)	Service Factor	FL Amps @ High	FL. Eff (%)	"C" Dimension (in)	Voltage (V)	Notes
3	2.2	3600	56H	00336ET3E56-S	$578	F1	54	1.15	3.50	86.5	15.079	230/460	9
		3600	182/4T	00336ET3E182T-S	$665	RSP	64	1.15	3.70	86.5	15.551	230/460	9
		3600	182/4T	00336ET3H182T-S	$665	RSP	63	1.15	3.00	86.5	15.551	575	9
		3600	182/4T	00336ET3E182T-W22	$763	N1	99	1.25	3.63	86.5	15.860	230/460	
		3600	182/4T	00336ET3H182T-W22	$763	N1	99	1.25	2.90	86.5	15.860	575	
		1800	182/4T	00318ET3E182T-S	$577	RSP	100	1.15	3.80	89.5	17.913	230/460	9
		1800	182/4T	00318ET3H182T-S	$577	RSP	100	1.15	3.00	89.5	17.913	575	9
		1800	182/4T	00318ET3E182T-W22	$663	N1	92	1.25	3.91	89.5	15.860	230/460	
		1800	182/4T	00318ET3H182T-W22	$663	N1	94	1.25	3.13	89.5	15.860	575	
		1200	213/5T	00312ET3E213T-S	$983	RSP	134	1.15	4.20	89.5	19.291	230/460	9
		1200	213/5T	00312ET3H213T-S	$983	RSP	133	1.15	3.40	89.5	19.291	575	9
		1200	213/5T	00312ET3E213T-W22	$1,129	N1	160	1.25	4.41	89.5	19.517	230/460	
		1200	213/5T	00312ET3H213T-W22	$1,129	N1	163	1.25	3.53	89.5	19.517	575	
		900	213/5T	00309ET3E215T-W22	$2,115	N1	189	1.25	4.55	85.5	19.517	230/460	
		900	213/5T	00309ET3H215T-W22	$2,115	N1	188	1.25	3.64	85.5	19.517	575	
5	3.7	3600	182/4T	00536ET3E184T-SRT	$810	RSP	83	1.15	5.90	88.5	16.339	230/460	9;51
		3600	182/4T	00536ET3E184T-S	$760	RSP	82	1.15	5.90	88.5	16.732	230/460	9
		3600	182/4T	00536ET3H184T-S	$760	RSP	82	1.15	4.70	88.5	16.732	575	9
		3600	182/4T	00536ET3E184T-W22	$873	N1	103	1.25	5.90	88.5	15.860	230/460	
		3600	182/4T	00536ET3H184T-W22	$873	N1	106	1.25	4.72	88.5	15.860	575	
		1800	182/4T	00518ET3E184T-SRT	$840	RSP	93	1.15	6.49	89.5	16.732	230/460	9
		1800	182/4T	00518ET3H184T-SRT	$840	RSP	93	1.15	5.19	89.5	16.732	575	9
		1800	182/4T	00518ET3E184T-S	$672	RSP	93	1.15	6.50	89.5	17.913	230/460	9
		1800	182/4T	00518ET3H184T-S	$672	RSP	93	1.15	5.20	89.5	17.913	575	9
		1800	182/4T	00518ET3P184T-S	$672	RSP	93	1.15	15.0	89.5	17.913	200	9
		1800	182/4T	00518ET3E184T-W22	$772	N1	101	1.25	6.45	89.5	15.860	230/460	
		1800	182/4T	00518ET3H184T-W22	$772	N1	104	1.25	5.16	89.5	15.860	575	
		1800	182/4T	00518ET3P184T-W22	$772	N1	103	1.25	14.8	89.5	15.860	200	
		1200	213/5T	00512ET3E215T-S	$1,160	RSP	153	1.15	6.70	89.5	20.079	230/460	9
		1200	213/5T	00512ET3H215T-S	$1,160	RSP	152	1.15	5.40	89.5	20.079	575	9
		1200	213/5T	00512ET3E215T-W22	$1,332	N1	170	1.25	6.83	89.5	19.517	230/460	
		1200	213/5T	00512ET3H215T-W22	$1,332	N1	180	1.25	5.46	89.5	19.517	575	
		900	254/6T	00509ET3E254T-W22	$3,301	N1	302	1.25	7.58	87.5	24.945	230/460	
		900	254/6T	00509ET3H254T-W22	$3,301	N1	321	1.25	6.06	87.5	24.945	575	

continued on next page

Please refer to inside back cover for description of "NOTES"

For detailed specifications, data sheets, drawings and performance curves visit http://www.weg.net

Data subject to change without notice.

TEFC - Foot Mount - *continued*

HP	kW	RPM	Frame	Catalog Number	List Price	Mult. Symbol	Approx. Shipping Weight (lbs)	Service Factor	FL Amps @ High	FL. Eff (%)	"C" Dimension (in)	Voltage (V)	Notes
7.5	5.5	3600	182/4T	00736ET3E184T-W22	$1,074	N1	106	1.25	8.76	89.5	15.860	230/460	12
		3600	213/5T	00736ET3E213T-SRT	$1,078	RSP	126	1.15	8.67	89.5	18.897	230/460	9
		3600	213/5T	00736ET3E213T-S	$980	RSP	143	1.15	8.70	89.5	18.898	230/460	9
		3600	213/5T	00736ET3H213T-S	$980	RSP	124	1.15	7.00	89.5	18.898	575	9
		3600	213/5T	00736ET3E213T-W22	$1,125	N1	149	1.25	8.76	89.5	19.517	230/460	
		3600	213/5T	00736ET3H213T-W22	$1,125	N1	163	1.25	7.01	89.5	19.517	575	
		1800	213/5T	00718ET3E213T-S	$948	RSP	140	1.15	9.10	91.7	18.898	230/460	9
		1800	213/5T	00718ET3H213T-S	$948	RSP	140	1.15	7.30	91.7	18.898	575	9
		1800	213/5T	00718ET3P213T-S	$948	RSP	140	1.15	20.9	91.7	18.898	200	9;51
		1800	213/5T	00718ET3E213T-W22	$1,089	N1	170	1.25	9.18	91.7	19.517	230/460	
		1800	213/5T	00718ET3H213T-W22	$1,089	N1	174	1.25	7.34	91.7	19.517	575	
		1800	213/5T	00718ET3P213T-W22	$1,089	N1	175	1.25	21.1	91.7	19.517	200	
		1200	254/6T	00712ET3E254T-S	$1,799	RSP	231	1.15	10.0	91.0	22.559	230/460	9
		1200	254/6T	00712ET3H254T-S	$1,799	RSP	229	1.15	8.00	91.0	22.559	575	9
		1200	254/6T	00712ET3E254T-W22	$2,065	N1	300	1.25	9.48	91.0	24.945	230/460	
		1200	254/6T	00712ET3H254T-W22	$2,065	N1	316	1.25	7.58	91.0	24.945	575	
		900	254/6T	00709ET3E256T-W22	$3,658	N1	317	1.25	11.1	87.5	24.945	230/460	
		900	254/6T	00709ET3H256T-W22	$3,658	N1	373	1.25	8.88	87.5	24.945	575	
10	7.5	3600	213/5T	01036ET3E215T-SRT	$1,276	RSP	178	1.15	11.5	90.2	19.291	230/460	9
		3600	213/5T	01036ET3E215T-S	$1,160	RSP	156	1.15	11.5	90.2	20.079	230/460	9
		3600	213/5T	01036ET3H215T-S	$1,160	RSP	156	1.15	9.20	90.2	20.079	575	9
		3600	213/5T	01036ET3E215T-W22	$1,332	N1	172	1.25	11.6	90.2	19.517	230/460	
		3600	213/5T	01036ET3H215T-W22	$1,332	N1	180	1.25	9.28	90.2	19.517	575	
		1800	213/5T	01018ET3E215T-S	$1,110	RSP	151	1.15	12.2	91.7	19.291	230/460	9
		1800	213/5T	01018ET3H215T-S	$1,110	RSP	151	1.15	9.80	91.7	19.291	575	9
		1800	213/5T	01018ET3E215T-W22	$1,273	N1	175	1.25	12.4	91.7	19.517	230/460	
		1800	213/5T	01018ET3H215T-W22	$1,273	N1	188	1.25	9.92	91.7	19.517	575	
		1800	213/5T	01018ET3P215T-W22	$1,273	N1	189	1.25	28.5	91.7	19.517	200	
		1200	254/6T	01012ET3E256T-S	$2,088	RSP	261	1.15	13.8	91.0	23.346	230/460	9
		1200	254/6T	01012ET3H256T-S	$2,088	RSP	259	1.15	11.0	91.0	23.346	575	9
		1200	254/6T	01012ET3E256T-W22	$2,396	N1	318	1.25	12.9	91.0	24.945	230/460	
		1200	254/6T	01012ET3H256T-W22	$2,396	N1	325	1.25	10.3	91.0	24.945	575	
		900	284/6T	01009ET3E284T-W22	$4,634	N1	373	1.25	13.4	90.2	27.929	230/460	
		900	284/6T	01009ET3H284T-W22	$4,634	N1	371	1.25	10.7	90.2	27.929	575	

continued on next page

Please refer to inside back cover for description of "NOTES"

For detailed specifications, data sheets, drawings and performance curves visit http://www.weg.net

TEFC - Foot Mount - *continued*

HP	kW	RPM	Frame	Catalog Number	List Price	Mult. Symbol	Approx. Shipping Weight (lbs)	Service Factor	FL Amps @ High	FL. Eff (%)	"C" Dimension (in)	Voltage (V)	Notes
15	11	3600	213/5T	01536ET3E215T-W22	$1,697	N1	192	1.25	17.0	91.0	19.517	230/460	12
		3600	254/6T	01536ET3E254T-S	$1,589	RSP	216	1.15	17.4	91.0	22.559	230/460	9
		3600	254/6T	01536ET3H254T-S	$1,589	RSP	216	1.15	13.9	91.0	22.559	575	9
		3600	254/6T	01536ET3E254T-W22	$1,824	N1	293	1.25	17.2	91.0	24.945	230/460	
		3600	254/6T	01536ET3H254T-W22	$1,824	N1	298	1.25	13.8	91.0	24.945	575	
		1800	254/6T	01518ET3E254T-S	$1,610	RSP	248	1.15	18.2	92.4	22.559	230/460	9
		1800	254/6T	01518ET3H254T-S	$1,610	RSP	248	1.15	14.6	92.4	22.559	575	9
		1800	254/6T	01518ET3P254T-S	$1,610	RSP	248	1.15	41.9	92.4	22.559	200	9
		1800	254/6T	01518ET3E254T-W22	$1,848	N1	339	1.25	18.0	92.4	24.945	230/460	
		1800	254/6T	01518ET3H254T-W22	$1,848	N1	347	1.25	14.4	92.4	24.945	575	
		1800	254/6T	01518ET3P254T-W22	$1,848	N1	349	1.25	41.4	92.4	24.945	200	
		1200	284/6TS	01512ET3E284TS-W22	$3,291	N1	420	1.25	17.9	91.7	26.557	230/460	
		1200	284/6TS	01512ET3H284TS-W22	$3,291	N1	360	1.25	14.3	91.7	26.557	575	
		1200	284/6T	01512ET3E284T-W22	$3,291	N1	406	1.25	17.9	91.7	27.929	230/460	
		1200	284/6T	01512ET3H284T-W22	$3,291	N1	420	1.25	14.3	91.7	27.929	575	
		900	284/6T	01509ET3E286T-W22	$5,368	N1	429	1.25	19.4	90.2	27.929	230/460	
		900	284/6T	01509ET3H286T-W22	$5,368	N1	428	1.25	15.5	90.2	27.929	575	
20	15	3600	254/6T	02036ET3E256T-S	$2,076	RSP	256	1.15	22.7	91.0	23.346	230/460	9
		3600	254/6T	02036ET3H256T-S	$2,076	RSP	256	1.15	18.2	91.0	23.346	575	9
		3600	254/6T	02036ET3E256T-W22	$2,382	N1	317	1.25	23.2	91.0	24.945	230/460	
		3600	254/6T	02036ET3H256T-W22	$2,382	N1	323	1.25	18.6	91.0	24.945	575	
		1800	254/6T	02018ET3E256T-S	$1,918	RSP	279	1.15	24.7	92.4	23.346	230/460	9
		1800	254/6T	02018ET3H256T-S	$1,918	RSP	279	1.15	19.8	93.0	23.346	575	9
		1800	254/6T	02018ET3E256T-W22	$2,201	N1	386	1.25	24.1	93.0	24.945	230/460	
		1800	254/6T	02018ET3H256T-W22	$2,201	N1	396	1.25	19.3	93.0	24.945	575	
		1800	254/6T	02018ET3P256T-W22	$2,201	N1	397	1.25	55.4	93.0	24.945	200	
		1200	284/6T	02012ET3E286T-W22	$3,962	N1	432	1.25	24.2	91.7	27.929	230/460	
		1200	284/6T	02012ET3H286T-W22	$3,962	N1	447	1.25	19.4	91.7	27.929	575	
		900	284/6T	02009ET3E286T-W22	$5,854	N1	556	1.00	28.2	90.2	27.929	230/460	1,12,37
		900	324/6T	02009ET3E324T-W22	$6,339	N1	548	1.25	28.3	91.0	31.116	230/460	
		900	324/6T	02009ET3H324T-W22	$6,339	N1	546	1.25	22.6	91.0	31.116	575	
25	18.5	3600	254/6T	02536ET3E256T-S	$2,487	RSP	252	1.15	28.5	91.7	23.346	230/460	9
		3600	284/6TS	02536ET3E284TS-W22	$2,998	N1	391	1.25	28.5	91.7	26.557	230/460	
		3600	284/6TS	02536ET3H284TS-W22	$2,998	N1	405	1.25	22.8	91.7	26.557	575	
		1800	284/6TS	02518ET3E284TS-W22	$2,743	N1	438	1.25	29.5	93.6	26.557	230/460	
		1800	284/6T	02518ET3E284T-W22	$2,743	N1	408	1.25	29.5	93.6	27.929	230/460	
		1800	284/6T	02518ET3H284T-W22	$2,743	N1	439	1.25	23.6	93.6	27.929	575	
		1200	324/6T	02512ET3E324T-W22	$4,737	N1	569	1.25	30.4	93.0	31.116	230/460	
		1200	324/6T	02512ET3H324T-W22	$4,737	N1	583	1.25	24.3	93.0	31.116	575	
		900	324/6T	02509ET3E326T-W22	$7,315	N1	593	1.25	35.9	91.0	31.116	230/460	
		900	324/6T	02509ET3H326T-W22	$7,315	N1	593	1.25	28.7	91.0	31.116	575	

continued on next page

Please refer to inside back cover for description of "NOTES"

For detailed specifications, data sheets, drawings and performance curves visit http://www.weg.net

Data subject to change without notice.

TEFC - Foot Mount - *continued*

HP	kW	RPM	Frame	Catalog Number	List Price	Mult. Symbol	Approx. Shipping Weight (lbs)	Service Factor	FL Amps @ High	FL. Eff (%)	"C" Dimension (in)	Voltage (V)	Notes
30	22	3600	284/6TS	03036ET3E286TS-W22	$3,561	N1	408	1.25	33.8	91.7	26.557	230/460	
		3600	284/6TS	03036ET3H286TS-W22	$3,561	N1	425	1.25	27.0	91.7	26.557	575	
		1800	284/6TS	03018ET3E286TS-W22	$3,223	N1	476	1.25	35.1	93.6	26.557	230/460	
		1800	284/6T	03018ET3E286T-W22	$3,223	N1	461	1.25	35.1	93.6	27.929	230/460	
		1800	284/6T	03018ET3H286T-W22	$3,223	N1	476	1.25	28.1	93.6	27.929	575	
		1200	324/6T	03012ET3E326T-W22	$5,273	N1	530	1.25	36.2	93.0	31.116	230/460	
		1200	324/6T	03012ET3H326T-W22	$5,273	N1	627	1.25	29.0	93.0	31.116	575	
		900	364/5T	03009ET3E364T-W22	$11,215	N1	899	1.25	37.0	92.4	34.251	230/460	
40	30	3600	324/6TS	04036ET3E324TS-W22	$4,725	N1	546	1.25	45.8	92.4	29.616	230/460	
		3600	324/6TS	04036ET3H324TS-W22	$4,725	N1	589	1.25	36.6	92.4	29.616	575	
		1800	324/6TS	04018ET3E324TS-W22	$4,178	N1	613	1.25	47.1	94.1	31.116	230/460	
		1800	324/6T	04018ET3E324T-W22	$4,178	N1	591	1.25	47.1	94.1	31.116	230/460	
		1800	324/6T	04018ET3H324T-W22	$4,178	N1	614	1.25	37.7	94.1	31.116	575	
		1800	324/6T	04018ET3P324T-W22	$4,178	N1	625	1.25	108	94.1	31.116	200	
		1200	364/5T	04012ET3E364T-W22	$7,284	N1	964	1.25	46.5	94.1	34.251	230/460	
		1200	364/5T	04012ET3H364T-W22	$7,284	N1	904	1.25	37.2	94.1	34.251	575	
		900	364/5T	04009ET3E365T-W22	$12,194	N1	954	1.25	50.3	92.4	34.251	230/460	
50	37	3600	324/6TS	05036ET3E326TS-W22	$5,316	N1	587	1.25	56.1	93.0	29.616	230/460	
		3600	324/6TS	05036ET3H326TS-W22	$5,316	N1	610	1.25	44.9	93.0	29.616	575	
		1800	324/6TS	05018ET3E326TS-W22	$5,100	N1	637	1.25	59.2	94.5	31.116	230/460	
		1800	324/6T	05018ET3E326T-W22	$5,100	N1	585	1.25	59.2	94.5	31.116	230/460	
		1800	324/6T	05018ET3H326T-W22	$5,100	N1	634	1.25	47.4	94.5	31.116	575	
		1200	364/5T	05012ET3E365T-W22	$8,518	N1	914	1.25	57.4	94.1	34.251	230/460	
		1200	364/5T	05012ET3H365T-W22	$8,518	N1	1026	1.25	45.9	94.1	34.251	575	
		900	404/5T	05009ET3E404T-W22	$17,648	N1	1214	1.25	60.0	93.0	39.730	230/460	
60	45	3600	364/5TS	06036ET3E364TS-W22	$7,552	N1	855	1.25	67.0	93.6	32.338	230/460	
		3600	364/5TS	06036ET3G364TS-W22	$7,552	N1	961	1.25	67.0	93.6	32.338	460	
		3600	364/5TS	06036ET3H364TS-W22	$7,552	N1	968	1.25	53.6	93.6	32.338	575	
		1800	364/5TS	06018ET3E364TS-W22	$7,389	N1	1026	1.25	68.3	95.0	32.338	230/460	
		1800	364/5T	06018ET3E364T-W22	$7,389	N1	946	1.25	68.3	95.0	34.251	230/460	
		1800	364/5T	06018ET3G364T-W22	$7,389	N1	1025	1.25	68.3	95.0	34.251	460	
		1800	364/5T	06018ET3H364T-W22	$7,389	N1	1033	1.25	54.6	95.0	34.251	575	
		1200	404/5T	06012ET3E404T-W22	$10,497	N1	1252	1.25	69.5	94.5	39.730	230/460	
		1200	404/5T	06012ET3ERB404T-W22	$10,497	N1	1262	1.25	69.5	94.5	39.730	230/460	14
		1200	404/5T	06012ET3G404T-W22	$10,497	N1	1213	1.25	69.5	94.5	39.730	460	
		1200	404/5T	06012ET3H404T-W22	$10,497	N1	1255	1.25	55.6	94.5	39.730	575	
		900	404/5T	06009ET3E405T-W22	$20,443	N1	1263	1.25	73.0	93.0	39.730	230/460	

continued on next page

Please refer to inside back cover for description of "NOTES"

For detailed specifications, data sheets, drawings and performance curves visit http://www.weg.net

TEFC - Foot Mount - *continued*

HP	kW	RPM	Frame	Catalog Number	List Price	Mult. Symbol	Approx. Shipping Weight (lbs)	Service Factor	FL Amps @ High	FL. Eff (%)	"C" Dimension (in)	Voltage (V)	Notes
75	55	3600	364/5TS	07536ET3E365TS-W22	$9,091	N1	900	1.25	81.9	93.6	32.338	230/460	
		3600	364/5TS	07536ET3G365TS-W22	$9,091	N1	963	1.25	81.9	93.6	32.338	460	
		3600	364/5TS	07536ET3H365TS-W22	$9,091	N1	967	1.25	65.5	93.6	32.338	575	
		1800	364/5TS	07518ET3E365TS-W22	$8,705	N1	988	1.25	84.1	95.4	32.338	230/460	
		1800	364/5T	07518ET3E365T-W22	$8,705	N1	969	1.25	84.1	95.4	34.251	230/460	
		1800	364/5T	07518ET3G365T-W22	$8,705	N1	1045	1.25	84.1	95.4	34.251	460	
		1800	364/5T	07518ET3H365T-W22	$8,705	N1	1050	1.25	67.3	95.4	34.251	575	
		1200	404/5T	07512ET3E405T-W22	$12,058	N1	1303	1.25	84.9	94.5	39.730	230/460	
		1200	404/5T	07512ET3ERB405T-W22	$12,058	N1	1262	1.25	84.9	94.5	39.730	230/460	14
		1200	404/5T	07512ET3G405T-W22	$12,058	N1	1298	1.25	84.9	94.5	39.730	460	
		1200	404/5T	07512ET3GRB405T-W22	$12,058	N1	1309	1.25	84.9	94.5	39.730	460	14
		1200	404/5T	07512ET3H405T-W22	$12,058	N1	1303	1.25	67.9	94.5	39.730	575	
		900	444/5T	07509ET3E444T-W22	$23,334	N1	1665	1.25	93.0	93.6	45.157	230/460	
100	75	3600	404/5TS	10036ET3E405TS-W22	$12,002	N1	1024	1.25	110	94.1	36.732	230/460	
		3600	404/5TS	10036ET3G405TS-W22	$12,002	N1	1176	1.25	110	94.1	36.732	460	
		3600	404/5TS	10036ET3H405TS-W22	$12,002	N1	1182	1.25	88.0	94.1	36.732	575	
		1800	404/5TS	10018ET3E405TS-W22	$11,689	N1	1266	1.25	111	95.4	36.732	230/460	
		1800	404/5T	10018ET3E405T-W22	$11,689	N1	1190	1.25	111	95.4	39.730	230/460	
		1800	404/5T	10018ET3ERB405T-W22	$11,689	N1	1239	1.25	111	95.4	39.730	230/460	14
		1800	404/5T	10018ET3G405T-W22	$11,689	N1	1280	1.25	111	95.4	39.730	460	
		1800	404/5T	10018ET3GRB405T-W22	$11,689	N1	1199	1.25	111	95.4	39.730	460	14
		1800	404/5T	10018ET3H405T-W22	$11,689	N1	1283	1.25	88.8	95.4	39.730	575	
		1800	404/5T	10018ET3HRB405T-W22	$11,689	N1	1294	1.25	88.8	95.4	39.730	575	14
		1200	444/5T	10012ET3E444T-W22	$15,631	N1	1786	1.25	121	95.0	45.157	230/460	
		1200	444/5T	10012ET3ERB444T-W22	$15,631	N1	1859	1.25	121	95.0	45.157	230/460	14
		1200	444/5T	10012ET3G444T-W22	$15,631	N1	1840	1.25	121	95.0	45.157	460	
		1200	444/5T	10012ET3GRB444T-W22	$15,631	N1	1854	1.25	121	95.0	45.157	460	14
		1200	444/5T	10012ET3H444T-W22	$15,631	N1	1837	1.25	96.8	95.0	45.157	575	
		900	444/5T	10009ET3E445T-W22	$26,988	N1	1900	1.25	127	94.1	45.157	230/460	
		900	444/5T	10009ET3G445T-W22	$26,988	N1	1939	1.25	127	94.1	45.157	460	

continued on next page

Please refer to inside back cover for description of "NOTES"

For detailed specifications, data sheets, drawings and performance curves visit http://www.weg.net

Data subject to change without notice.

TEFC - Foot Mount - *continued*

HP	kW	RPM	Frame	Catalog Number	List Price	Mult. Symbol	Approx. Shipping Weight (lbs)	Service Factor	FL Amps @ High	FL. Eff (%)	"C" Dimension (in)	Voltage (V)	Notes
125	90	3600	444/5TS	12536ET3E444TS-W22	$15,350	N1	1802	1.15	134	95.0	41.407	230/460	
		3600	444/5TS	12536ET3G444TS-W22	$15,350	N1	1798	1.15	134	95.0	41.407	460	
		3600	444/5TS	12536ET3H444TS-W22	$15,350	N1	1795	1.15	107	95.0	41.407	575	
		1800	444/5TS	12518ET3E444TS-W22	$14,748	N1	1627	1.15	139	95.4	41.407	230/460	
		1800	444/5T	12518ET3E444T-W22	$14,748	N1	1699	1.15	139	95.4	45.157	230/460	
		1800	444/5T	12518ET3ERB444T-W22	$14,748	N1	1730	1.15	139	95.4	45.157	230/460	14
		1800	444/5T	12518ET3G444T-W22	$14,748	N1	1710	1.15	139	95.4	45.157	460	
		1800	444/5T	12518ET3GRB444T-W22	$14,748	N1	1736	1.15	139	95.4	45.157	460	14
		1800	444/5T	12518ET3H444T-W22	$14,748	N1	1815	1.15	111	95.4	45.157	575	
		1200	444/5T	12512ET3E445T-W22	$17,947	N1	1980	1.15	143	95.0	45.157	230/460	
		1200	444/5T	12512ET3ERB445T-W22	$17,947	N1	1993	1.15	143	95.0	45.157	230/460	14
		1200	444/5T	12512ET3G445T-W22	$17,947	N1	1893	1.15	143	95.0	45.157	460	
		1200	444/5T	12512ET3GRB445T-W22	$17,947	N1	1996	1.15	143	95.0	45.157	460	14
		1200	444/5T	12512ET3H445T-W22	$17,947	N1	1974	1.15	114	95.0	45.157	575	
		900	445/7T	12509ET3G447T-W22	$28,175	N1	2235	1.15	151	94.5	48.701	460	
150	110	3600	444/5TS	15036ET3E445TS-W22	$18,882	N1	1899	1.15	161	95.0	41.407	230/460	
		3600	444/5TS	15036ET3G445TS-W22	$18,882	N1	1908	1.15	161	95.0	41.407	460	
		1800	444/5TS	15018ET3G445TS-W22	$17,420	N1	1869	1.15	170	95.8	41.407	460	
		1800	444/5T	15018ET3E445T-W22	$17,420	N1	1918	1.15	170	95.8	45.157	230/460	
		1800	444/5T	15018ET3G445T-W22	$17,420	N1	1905	1.15	170	95.8	45.157	460	
		1800	444/5T	15018ET3GRB445T-W22	$17,420	N1	1853	1.15	170	95.8	45.157	460	14
		1800	444/5T	15018ET3H445T-W22	$17,420	N1	1958	1.15	136	95.8	45.157	575	
		1800	444/5T	15018ET3HRB445T-W22	$17,420	N1	2034	1.15	136	95.8	45.157	575	14
		1200	445/7T	15012ET3E447T-W22	$20,639	N1	2354	1.15	176	95.8	48.701	230/460	
		1200	445/7T	15012ET3G447T-W22	$20,639	N1	2472	1.15	176	95.8	48.701	460	
		1200	445/7T	15012ET3GRB447T-W22	$20,639	N1	2371	1.15	176	95.8	48.701	460	14
		1200	445/7T	15012ET3H447T-W22	$20,639	N1	2467	1.15	141	95.8	48.701	575	
		900	447/9T	15009ET3G449T-W22	$30,677	N1	3079	1.15	185	94.5	56.338	460	

continued on next page

Please refer to inside back cover for description of "NOTES"

For detailed specifications, data sheets, drawings and performance curves visit http://www.weg.net

TEFC - Foot Mount - *continued*

HP	kW	RPM	Frame	Catalog Number	List Price	Mult. Symbol	Approx. Shipping Weight (lbs)	Service Factor	FL Amps @ High	FL. Eff (%)	"C" Dimension (in)	Voltage (V)	Notes
200	150	3600	445/7TS	20036ET3E447TS-W22	$23,562	N1	2224	1.15	219	95.4	44.951	230/460	
		3600	445/7TS	20036ET3G447TS-W22	$23,562	N1	2046	1.15	219	95.4	44.951	460	
		3600	504/5S	20036ET3G504S-W22	$23,562	N1	2373	1.15	222	95.4	48.215	460	
		1800	445/7TS	20018ET3G447TS-W22	$21,098	N1	2138	1.15	230	96.2	44.951	460	
		1800	445/7T	20018ET3E447T-W22	$21,098	N1	2349	1.15	230	96.2	48.701	230/460	
		1800	445/7T	20018ET3G447T-W22	$21,098	N1	2224	1.15	230	96.2	48.701	460	
		1800	445/7T	20018ET3GRB447T-W22	$21,098	N1	2209	1.15	230	96.2	48.701	460	14
		1800	445/7T	20018ET3H447T-W22	$21,098	N1	2477	1.15	184	96.2	48.701	575	
		1800	445/7T	20018ET3HRB447T-W22	$21,098	N1	1850	1.15	184	96.2	48.701	575	14
		1800	504/5	20018ET3G504-W22	$21,098	N1	2621	1.15	228	96.2	54.095	460	
		1200	445/7T	20012ET3G447T-W22	$25,133	N1	2406	1.15	237	95.8	48.701	460	
		1200	445/7T	20012ET3GRB447T-W22	$25,133	N1	2588	1.15	237	95.8	48.701	460	14
		1200	447/9T	20012ET3E449T-W22	$25,255	N1	2495	1.15	237	95.8	56.338	230/460	
		1200	447/9T	20012ET3G449T-W22	$25,255	N1	3044	1.15	237	95.8	56.338	460	
		1200	447/9T	20012ET3GRB449T-W22	$25,255	N1	2940	1.15	237	95.8	56.338	460	14
		1200	447/9T	20012ET3H449T-W22	$25,255	N1	2933	1.15	190	95.8	56.338	575	
		1200	504/5	20012ET3G505-W22	$25,133	N1	2467	1.15	237	95.8	54.095	460	
		900	447/9T	20009ET3G449T-W22	$49,899	N1	3255	1.15	254	95.0	56.338	460	
250	185	3600	445/7TS	25036ET3G447TS-W22	$29,846	N1	2535	1.15	266	95.8	44.951	460	
		3600	447/9TS	25036ET3G449TS-W22	$33,173	N1	2730	1.15	266	95.8	52.588	460	
		1800	445/7TS	25018ET3G447TS-W22	$27,189	N1	2709	1.15	281	96.2	44.951	460	
		1800	445/7T	25018ET3H447T-W22	$26,716	N1	2710	1.15	225	96.2	48.701	575	
		1800	445/7TS	25018ET3H447TS-W22	$27,189	N1	2896	1.15	225	96.2	44.951	575	
		1800	445/7T	25018ET3G447T-W22	$26,716	N1	2446	1.15	281	96.2	48.701	460	
		1800	445/7T	25018ET3GRB447T-W22	$26,716	N1	2554	1.15	281	96.2	48.701	460	14
		1800	445/7T	25018ET3HRB447T-W22	$26,716	N1	2414	1.15	225	96.2	48.701	575	14,51
		1800	447/9T	25018ET3G449T-W22	$26,803	N1	2879	1.15	281	96.2	56.338	460	
		1800	447/9T	25018ET3GRB449T-W22	$26,803	N1	2815	1.15	281	96.2	56.338	460	14
		1200	447/9T	25012ET3E449T-W22	$35,555	N1	3217	1.15	292	95.8	56.338	230/460	
		1200	447/9T	25012ET3G449T-W22	$35,555	N1	3090	1.15	292	95.8	56.338	460	
		1200	447/9T	25012ET3GRB449T-W22	$35,555	N1	3224	1.15	292	95.8	56.338	460	14
		1200	447/9T	25012ET3H449T-W22	$35,555	N1	3206	1.15	234	95.8	56.338	575	
		1200	586/7	25012ET3G586/7-W22	$39,631	N1	3769	1.15	299	95.8	61.902	460	43
		900	L447/9T	25009ET3G449T-W22	$56,168	N1	3590	1.15	308	95.4	57.181	460	43
300	220	3600	447/9TS	30036ET3G449TS-W22	$38,269	N1	2987	1.15	320	95.8	52.588	460	
		1800	447/9TS	30018ET3G449TS-W22	$31,384	N1	2894	1.15	330	96.2	52.588	460	44
		1800	447/9T	30018ET3G449T-W22	$31,384	N1	2888	1.15	330	96.2	56.338	460	
		1800	447/9T	30018ET3GRB449T-W22	$31,384	N1	2992	1.15	330	96.2	56.338	460	14
		1200	447/9T	30012ET3G449T-W22	$38,437	N1	3178	1.00	356	95.8	56.338	460	37
		1200	447/9T	30012ET3GKD449T-W22	$38,437	K1	3313	1.00	356	95.8	56.338	460	14
		1200	586/7	30012ET3G586/7-W22	$44,301	N1	4061	1.15	356	95.8	61.902	460	43
		900	L447/9T	30009ET3G449T-W22	$58,655	N1	3826	1.15	371	95.4	57.181	460	19,43

continued on next page

Please refer to inside back cover for description of "NOTES"

For detailed specifications, data sheets, drawings and performance curves visit http://www.weg.net

Data subject to change without notice.

TEFC - Foot Mount - *continued*

HP	kW	RPM	Frame	Catalog Number	List Price	Mult. Symbol	Approx. Shipping Weight (lbs)	Service Factor	FL Amps @ High	FL. Eff (%)	"C" Dimension (in)	Voltage (V)	Notes
350	260	3600	447/9TS	35036ET3G449TS-W22	$43,805	N1	3120	1.15	377	96.2	52.588	460	
		1800	447/9TS	35018ET3G449TS-W22	$36,517	N1	3123	1.15	394	96.2	52.588	460	44
		1800	447/9T	35018ET3G449T-W22	$36,517	N1	3168	1.15	394	96.2	56.338	460	
		1800	447/9T	35018ET3GRB449T-W22	$36,517	N1	2941	1.15	394	96.2	56.338	460	14
		1200	L447/9T	35012ET3G449T-W22	$47,633	N1	3781	1.15	415	95.8	57.181	460	37,43
		1200	L447/9T	35012ET3GRB449T-W22	$47,633	N1	3800	1.15	415	95.8	57.181	460	14,37,43
		900	586/7	35009ET3G586/7-W22	$64,873	N1	5028	1.00	426	95.8	61.902	460	1,43
400	300	3600	L447/9TS	40036ET3G449TS-W22	$44,605	N1	3361	1.15	432	95.8	53.431	460	43
		1800	L447/9TS	40018ET3G449TS-W22	$43,805	N1	3328	1.15	445	96.2	53.431	460	43
		1800	L447/9T	40018ET3G449T-W22	$43,805	N1	3416	1.15	445	96.2	57.181	460	43
		1800	L447/9T	40018ET3GRB449T-W22	$43,805	N1	3404	1.15	445	96.2	57.181	460	14,43
		1800	L447/9T	40018ET3H449T-W22	$43,805	N1	3400	1.15	356	96.2	57.181	575	43
		1200	L447/9T	40012ET3G449T-W22	$52,307	N1	3720	1.00	477	95.8	57.181	460	19,37,43
		1200	L447/9T	40012ET3GRB449T-W22	$52,307	N1	3827	1.00	477	95.8	57.181	460	14,19,37,43
		1200	586/7	40012ET3G586/7-W22	$56,201	N1	4663	1.15	483	96.2	61.902	460	43
		900	588/9	40009ET3G588/9-W22	$66,123	N1	3308	1.00	498	95.7	69.381	460	1,43
450	330	3600	L447/9TS	45036ET3G449TS-W22	$49,610	N1	3537	1.00	475	95.8	53.431	460	1,19,43
		1800	L447/9T	45018ET3G449T-W22	$48,010	N1	3681	1.15	501	96.2	57.181	460	43
		1800	L447/9T	45018ET3GRB449T-W22	$48,010	N1	3657	1.15	501	96.2	57.181	460	14,43
		1200	586/7	45012ET3G586/7-W22	$62,251	N1	4957	1.00	532	96.2	61.902	460	43
		1200	586/7	45012ET3GRB586/7-W22	$62,251	N1	5248	1.00	532	96.2	61.902	460	14,43
		900	588/9	45009ET3G588/9-W22	$68,715	N1	5915	1.00	534	95.8	69.381	460	1, 43,44
500	370	3600	586/7S	50036ET3G586/7S-W22	$56,305	N1	4649	1.15	530	96.2	55.027	460	43,44
		1800	L447/9T	50018ET3G449T-W22	$50,594	N1	3889	1.00	561	96.2	57.181	460	1,19,43,44
		1800	L447/9T	50018ET3GRB449T-W22	$50,594	N1	5424	1.00	561	96.2	57.181	460	14,19,43
		1200	586/7	50012ET3G586/7-W22	$62,962	N1	4916	1.00	603	96.2	61.902	460	43,44
600	450	3600	588/9S	60036ET3G588/9S-W22	$64,635	N1	5142	1.00	650	96.5	62.506	460	1,43,44
		1800	586/7	60018ET3G586/7-W22	$60,316	N1	4963	1.00	665	96.5	61.902	460	43,44
		1200	588/9	60012ET3G588/9-W22	$71,374	N1	6168	1.00	743	96.2	69.381	460	1,43,44
650	480	3600	588/9S	65036ET3G588/9S-W22	$66,835	N1	4805	1.00	685	96.6	62.506	460	1,43,44
		1800	588/9	65018ET3G588/9-W22	$66,701	N1	5597	1.00	734	96.6	69.381	460	1,43,44
700	515	3600	588/9S	70036ET3G588/9S-W22	$71,254	N1	5680	1.00	736	96.6	62.506	460	1,19,43,44
		1800	588/9	70018ET3G588/9-W22	$71,185	N1	5940	1.00	788	96.6	69.381	460	1,43,44
750	550	1800	588/9	75018ET3G588/9-W22	$74,025	N1	5154	1.00	840	96.7	69.381	460	1,43,44

Please refer to inside back cover for description of "NOTES"

For detailed specifications, data sheets, drawings and performance curves visit http://www.weg.net

TEFC - C-Face - Foot Mount

HP	kW	RPM	Frame	Catalog Number	List Price	Mult. Symbol	Approx. Shipping Weight (lbs)	Service Factor	FL Amps @ High	FL. Eff (%)	"C" Dimension (in)	Voltage (V)	Notes
0.25	0.18	3600	56C	.2536ES3E56C-S	$258	F1	21	1.15	0.50	57.5	11.142	208-230/460	9
		1800	56C	.2518ES3E56C-S	$270	F1	23	1.15	0.50	70.0	11.142	208-230/460	9
		1800	56C	.2518ES3H56C-S	$270	F1	23	1.15	0.40	70.0	11.142	575	9
0.33	0.25	3600	56C	.3336ES3E56C-S	$270	F1	22	1.15	0.60	62.0	11.142	208-230/460	9
		3600	56C	.3336ES3H56C-S	$270	F1	22	1.15	0.50	62.0	11.142	575	9
		1800	56C	.3318ES3E56C-S	$274	F1	24	1.15	0.60	74.0	11.535	208-230/460	9
0.5	0.37	3600	56C	.5036ES3E56C-S	$282	F1	24	1.15	0.80	68.0	11.535	208-230/460	9
		3600	56C	.5036ES3H56C-S	$281	F1	24	1.15	0.70	68.0	11.535	575	9
		1800	56C	.5018ES3E56C-S	$311	F1	26	1.15	0.90	77.0	11.535	208-230/460	9
		1800	56C	.5018ES3H56C-S	$263	F1	26	1.15	0.70	77.0	11.535	575	9
		1200	56C	.5012ES3E56C-S	$440	F1	31	1.15	1.00	72.0	12.323	208-230/460	9
0.75	0.55	3600	56C	.7536ES3E56C-S	$311	F1	25	1.15	1.10	72.0	11.535	208-230/460	9
		3600	56C	.7536ES3H56C-S	$310	F1	25	1.15	0.90	72.0	11.535	575	9
		1800	56C	.7518ES3E56C-S	$332	F1	28	1.15	1.20	78.5	11.929	208-230/460	9
		1800	56C	.7518ES3H56C-S	$333	F1	28	1.15	1.00	78.5	11.929	575	9
		1200	56HC	.7512ES3E56C-S	$449	F1	34	1.15	1.30	75.5	12.716	208-230/460	9
1	0.75	3600	W56C	00136ET3EW56C-S	$420	F1	25	1.15	1.50	78.5	11.106	230/460	9
		3600	W56C	00136ET3HW56C-S	$420	F1	25	1.15	1.20	78.5	11.106	575	9
		3600	143/5TC	00136ET3E143TC-W22	$566	N1	47	1.25	1.44	81.5	13.358	230/460	
		1800	56C	00118ET3E56C-S	$407	F1	41	1.15	1.50	85.5	13.504	230/460	9
		1800	56C	00118ET3H56C-S	$407	F1	41	1.15	1.20	85.5	13.504	575	9
		1800	143/5TC	00118ET3E143TC-S	$484	RSP	42	1.15	1.50	85.5	13.583	230/460	9
		1800	143/5TC	00118ET3H143TC-S	$484	RSP	42	1.15	1.20	85.5	13.583	575	9
		1800	143/5TC	00118ET3E143TC-W22	$555	N1	50	1.25	1.47	85.5	13.358	230/460	
		1800	143/5TC	00118ET3H143TC-W22	$555	N1	50	1.25	1.18	85.5	13.358	575	
		1200	56HC	00112ET3E56C-S	$525	F1	42	1.15	1.60	82.5	13.504	230/460	9
		1200	143/5TC	00112ET3E145TC-S	$554	RSP	43	1.15	1.60	82.5	13.583	230/460	9
		1200	143/5TC	00112ET3E145TC-W22	$636	N1	57	1.25	1.73	82.5	13.358	230/460	
1.5	1.1	3600	56C	00156ET3E56C-S	$461	F1	37	1.15	1.90	84.0	13.109	230/460	9
		3600	56C	00156ET3H56C-S	$461	F1	37	1.15	1.50	84.0	13.109	575	9
		3600	143/5TC	00156ET3E143TC-S	$497	RSP	39	1.15	1.90	84.0	13.189	230/460	9
		3600	143/5TC	00156ET3E143TC-W22	$571	N1	52	1.25	1.96	84.0	13.358	230/460	
		3600	143/5TC	00156ET3H143TC-W22	$571	N1	51	1.25	1.57	84.0	13.358	575	
		1800	56HC	00158ET3E56C-S	$463	F1	44	1.15	2.00	86.5	13.504	230/460	9
		1800	56HC	00158ET3H56C-S	$463	F1	44	1.15	1.60	86.5	13.504	575	9
		1800	143/5TC	00158ET3E145TC-S	$504	RSP	43	1.15	2.00	86.5	13.583	230/460	9
		1800	143/5TC	00158ET3H145TC-S	$504	RSP	43	1.15	1.60	86.5	13.583	575	9
		1800	143/5TC	00158ET3E145TC-W22	$579	N1	56	1.25	2.02	86.5	13.358	230/460	
		1800	143/5TC	00158ET3H145TC-W22	$579	N1	56	1.25	1.62	86.5	13.358	575	
		1200	182/4TC	00152ET3E182TC-S	$690	RSP	85	1.15	2.20	87.5	16.339	230/460	9
		1200	182/4TC	00152ET3E182TC-W22	$792	N1	101	1.25	2.54	87.5	15.860	230/460	

continued on next page

Please refer to inside back cover for description of "NOTES"

For detailed specifications, data sheets, drawings and performance curves visit http://www.weg.net

Data subject to change without notice.

TEFC - C-Face - Foot Mount - *continued*

HP	kW	RPM	Frame	Catalog Number	List Price	Mult. Symbol	Approx. Shipping Weight (lbs)	Service Factor	FL Amps @ High	FL. Eff (%)	"C" Dimension (in)	Voltage (V)	Notes
2	1.5	3600	56HC	00236ET3E56C-S	$517	F1	44	1.15	2.50	85.5	13.898	230/460	9
		3600	56HC	00236ET3H56C-S	$517	F1	44	1.15	2.00	85.5	13.898	575	9
		3600	143/5TC	00236ET3H145TC-S	$539	RSP	45	1.15	2.00	85.5	13.976	575	9
		3600	143/5TC	00236ET3E145TC-W22	$619	N1	56	1.25	2.56	85.5	13.358	230/460	
		3600	143/5TC	00236ET3H145TC-W22	$619	N1	56	1.25	2.05	85.5	13.358	575	
		1800	56HC	00218ET3E56C-S	$506	F1	46	1.15	2.70	86.5	13.898	230/460	9
		1800	143/5TC	00218ET3E145TC-S	$558	RSP	47	1.15	2.70	86.5	13.976	230/460	9
		1800	143/5TC	00218ET3H145TC-S	$558	RSP	47	1.15	2.20	86.5	13.976	575	9
		1800	143/5TC	00218ET3E145TC-W22	$640	N1	53	1.25	2.76	86.5	13.358	230/460	
		1800	143/5TC	00218ET3H145TC-W22	$640	N1	57	1.25	2.21	86.5	13.358	575	
		1200	182/4TC	00212ET3E184TC-S	$747	RSP	96	1.15	3.00	88.5	17.126	230/460	9
		1200	182/4TC	00212ET3E184TC-W22	$857	N1	112	1.25	3.22	88.5	15.860	230/460	39
3	2.2	3600	56HC	00336ET3E56C-S	$606	F1	54	1.15	3.50	86.5	15.079	230/460	9
		3600	56HC	00336ET3H56C-S	$606	F1	54	1.15	2.80	86.5	15.079	575	9
		3600	143/5TC	00336ET3E145TC-S	$674	RSP	54	1.15	3.50	86.5	15.157	230/460	9
		3600	182/4TC	00336ET3E182TC-S	$698	RSP	72	1.15	3.70	86.5	15.551	230/460	9
		3600	182/4TC	00336ET3H182TC-S	$698	RSP	72	1.15	3.00	86.5	15.551	575	9
		3600	182/4TC	00336ET3E182TC-W22	$802	N1	103	1.25	3.63	86.5	15.860	230/460	
		3600	182/4TC	00336ET3H182TC-W22	$802	N1	103	1.25	2.90	86.5	15.860	575	
		1800	182/4TC	00318ET3E182TC-S	$610	RSP	100	1.15	3.80	89.5	17.913	230/460	9
		1800	182/4TC	00318ET3H182TC-S	$610	RSP	100	1.15	3.00	89.5	17.913	575	9
		1800	182/4TC	00318ET3E182TC-W22	$700	N1	96	1.25	3.91	89.5	15.860	230/460	
		1800	182/4TC	00318ET3H182TC-W22	$700	N1	98	1.25	3.13	89.5	15.860	575	
		1200	213/5TC	00312ET3E213TC-W22	$1,180	N1	166	1.25	4.41	89.5	19.517	230/460	
		900	213/5TC	00309ET3E215TC-W22	$2,166	N1	192	1.25	4.55	85.5	19.517	230/460	
5	3.7	3600	182/4TC	00536ET3E184TC-S	$793	RSP	92	1.15	5.90	88.5	16.732	230/460	9
		3600	182/4TC	00536ET3H184TC-S	$793	RSP	92	1.15	4.70	88.5	16.732	575	9
		3600	182/4TC	00536ET3E184TC-W22	$911	N1	110	1.25	5.90	88.5	15.860	230/460	
		3600	182/4TC	00536ET3H184TC-W22	$911	N1	109	1.25	4.72	88.5	15.860	575	
		1800	182/4TC	00518ET3E184TC-S	$706	RSP	81	1.15	6.50	89.5	17.913	230/460	9
		1800	182/4TC	00518ET3H184TC-S	$706	RSP	93	1.15	5.20	89.5	17.913	575	9
		1800	182/4TC	00518ET3E184TC-W22	$810	N1	107	1.25	6.45	89.5	15.860	230/460	
		1800	182/4TC	00518ET3H184TC-W22	$810	N1	108	1.25	5.16	89.5	15.860	575	
		1200	213/5T	00512ET3E215TC-S	$1,206	RSP	155	1.15	6.74	89.5	20.079	230/460	9
		1200	213/5TC	00512ET3E215TC-W22	$1,384	N1	183	1.25	6.83	89.5	19.517	230/460	
7.5	5.5	3600	182/4TC	00736ET3E184TC-S	$985	RSP	83	1.15	8.60	89.5	16.339	230/460	9
		3600	213/5TC	00736ET3H213TC-S	$1,025	RSP	134	1.15	7.00	89.5	18.898	575	9
		3600	182/4TC	00736ET3E184TC-W22	$1,112	N1	110	1.25	8.76	89.5	15.860	230/460	12
		3600	182/4TC	00736ET3H184TC-W22	$1,112	N1	109	1.25	7.01	89.5	15.860	575	
		3600	213/5TC	00736ET3E213TC-W22	$1,177	N1	166	1.25	8.76	89.5	19.517	230/460	
		3600	213/5TC	00736ET3H213TC-W22	$1,177	N1	166	1.25	7.01	89.5	19.517	575	
		1800	213/5TC	00718ET3E213TC-W22	$1,141	N1	174	1.25	9.18	91.7	19.517	230/460	
		1800	213/5TC	00718ET3E213TC-S	$994	RSP	140	1.15	9.10	91.7	18.898	230/460	9
		1800	213/5TC	00718ET3H213TC-W22	$1,141	N1	178	1.25	7.34	91.7	19.517	575	
		1200	254/6TC	00712ET3E254TC-W22	$2,134	N1	321	1.25	9.48	91.0	24.945	230/460	
		900	254/6TC	00709ET3E256TC-W22	$3,726	N1	341	1.25	11.1	87.5	24.945	230/460	

continued on next page

Please refer to inside back cover for description of "NOTES"

For detailed specifications, data sheets, drawings and performance curves visit http://www.weg.net

TEFC - C-Face - Foot Mount - *continued*

HP	kW	RPM	Frame	Catalog Number	List Price	Mult. Symbol	Approx. Shipping Weight (lbs)	Service Factor	FL Amps @ High	FL. Eff (%)	"C" Dimension (in)	Voltage (V)	Notes
10	7.5	3600	213/5TC	01036ET3H215TC-S	$1,205	RSP	166	1.15	9.20	90.2	20.079	575	9
		3600	213/5TC	01036ET3E215TC-S	$1,205	RSP	164	1.15	11.5	90.2	20.079	230/460	9
		3600	213/5TC	01036ET3E215TC-W22	$1,383	N1	178	1.25	11.6	90.2	19.517	230/460	
		3600	213/5TC	01036ET3H215TC-W22	$1,383	N1	183	1.25	9.28	90.2	19.517	575	
		1800	213/5TC	01018ET3E215TC-S	$1,154	RSP	151	1.15	12.2	91.7	19.291	230/460	9
		1800	213/5TC	01018ET3H215TC-S	$1,154	RSP	151	1.15	9.80	91.7	19.291	575	9
		1800	213/5TC	01018ET3E215TC-W22	$1,325	N1	183	1.25	12.4	91.7	19.517	230/460	
		1800	213/5TC	01018ET3H215TC-W22	$1,325	N1	191	1.25	9.92	91.7	19.517	575	
		1200	254/6TC	01012ET3E256TC-W22	$2,465	N1	329	1.25	12.9	91.0	24.945	230/460	
15	11	3600	213/5TC	01536ET3E215TC-W22	$1,748	N1	187	1.25	17.0	91.0	19.517	230/460	12
		3600	254/6TC	01536ET3H254TC-S	$1,649	RSP	216	1.15	13.9	91.0	22.559	575	9
		3600	254/6TC	01536ET3E254TC-W22	$1,893	N1	295	1.25	17.2	91.0	24.945	230/460	
		3600	254/6TC	01536ET3H254TC-W22	$1,893	N1	302	1.25	13.8	91.0	24.945	575	
		1800	254/6TC	01518ET3E254TC-S	$1,670	RSP	248	1.15	18.2	92.4	22.559	230/460	9
		1800	254/6TC	01518ET3H254TC-S	$1,670	RSP	248	1.15	14.6	92.4	22.559	575	9
		1800	254/6TC	01518ET3E254TC-W22	$1,917	N1	340	1.25	18.0	92.4	24.945	230/460	
		1800	254/6TC	01518ET3H254TC-W22	$1,917	N1	351	1.25	14.4	92.4	24.945	575	
		1200	284/6TC	01512ET3E284TC-W22	$3,388	N1	430	1.25	17.9	91.7	27.929	230/460	
		1200	284/6TC	01512ET3H284TC-W22	$3,388	N1	428	1.25	14.3	91.7	27.929	575	
20	15	3600	254/6TC	02036ET3E256TC-S	$2,136	RSP	256	1.15	22.7	91.0	23.346	230/460	9
		3600	254/6TC	02036ET3H256TC-S	$2,136	RSP	256	1.15	18.2	91.0	23.346	575	9
		3600	254/6TC	02036ET3E256TC-W22	$2,451	N1	318	1.25	23.2	91.0	24.945	230/460	
		3600	254/6TC	02036ET3H256TC-W22	$2,451	N1	327	1.25	18.6	91.0	24.945	575	
		1800	254/6TC	02018ET3E256TC-S	$1,978	RSP	279	1.15	24.7	93.0	23.346	230/460	9
		1800	254/6TC	02018ET3H256TC-S	$1,978	RSP	279	1.15	19.8	93.0	23.346	575	9
		1800	254/6TC	02018ET3E256TC-W22	$2,270	N1	389	1.25	24.1	93.0	24.945	230/460	
		1800	254/6TC	02018ET3H256TC-W22	$2,270	N1	401	1.25	19.3	93.0	24.945	575	
		1200	284/6TC	02012ET3E286TC-W22	$4,060	N1	457	1.25	24.2	91.7	27.929	230/460	
25	18.5	3600	284/6TSC	02536ET3E284TSC-W22	$3,096	N1	416	1.25	28.5	91.7	26.557	230/460	
		3600	284/6TSC	02536ET3H284TSC-W22	$3,096	N1	413	1.25	22.8	91.7	26.557	575	
		1800	284/6TC	02518ET3E284TC-W22	$2,840	N1	418	1.25	29.5	93.6	27.929	230/460	
		1800	284/6TC	02518ET3H284TC-W22	$2,840	N1	447	1.25	23.6	93.6	27.929	575	
		1200	324/6TC	02512ET3E324TC-W22	$4,858	N1	601	1.25	30.4	93.0	31.116	230/460	
30	22	3600	284/6TSC	03036ET3E286TSC-W22	$3,659	N1	433	1.25	33.8	91.7	26.557	230/460	
		3600	284/6TSC	03036ET3H286TSC-W22	$3,659	N1	433	1.25	27.0	91.7	26.557	575	
		1800	284/6TC	03018ET3E286TC-W22	$3,321	N1	466	1.25	35.1	93.6	27.929	230/460	
		1800	284/6TC	03018ET3H286TC-W22	$3,321	N1	484	1.25	28.1	93.6	27.929	575	
		1200	324/6TC	03012ET3E326TC-W22	$5,394	N1	645	1.25	36.2	93.0	31.116	230/460	
40	30	3600	324/6TSC	04036ET3E324TSC-W22	$4,845	N1	606	1.25	45.8	92.4	29.616	230/460	
		3600	324/6TSC	04036ET3H324TSC-W22	$4,845	N1	605	1.25	36.6	92.4	29.616	575	
		1800	324/6TSC	04018ET3E324TSC-W22	$4,300	N1	629	1.25	47.1	94.1	29.616	230/460	
		1800	324/6TC	04018ET3E324TC-W22	$4,300	N1	606	1.25	47.1	94.1	31.116	230/460	
		1800	324/6TC	04018ET3H324TC-W22	$4,300	N1	630	1.25	37.7	94.1	31.116	575	
		1200	364/5TC	04012ET3E364TC-W22	$7,576	N1	1032	1.25	46.5	94.1	34.251	230/460	

continued on next page

TEFC - C-Face - Foot Mount - *continued*

HP	kW	RPM	Frame	Catalog Number	List Price	Mult. Symbol	Approx. Shipping Weight (lbs)	Service Factor	FL Amps @ High	FL. Eff (%)	"C" Dimension (in)	Voltage (V)	Notes
50	37	3600	324/6TSC	05036ET3E326TSC-W22	$5,437	N1	628	1.25	56.1	93.0	29.616	230/460	
		3600	324/6TSC	05036ET3H326TSC-W22	$5,437	N1	628	1.25	44.9	93.0	29.616	575	
		1800	324/6TSC	05018ET3E326TSC-W22	$5,221	N1	614	1.25	59.2	94.5	29.616	230/460	
		1800	324/6TC	05018ET3E326TC-W22	$5,221	N1	625	1.25	59.2	94.5	31.116	230/460	
		1800	324/6TC	05018ET3H326TC-W22	$5,221	N1	651	1.25	47.4	94.5	31.116	575	
		1200	364/5TC	05012ET3E365TC-W22	$8,960	N1	1048	1.25	57.4	94.1	34.251	230/460	
60	45	3600	364/5TSC	06036ET3E364TSC-W22	$7,994	N1	990	1.25	67.0	93.6	32.338	230/460	
		3600	364/5TSC	06036ET3H364TSC-W22	$7,994	N1	992	1.25	53.6	93.6	32.338	575	
		1800	364/5TC	06018ET3E364TC-W22	$7,831	N1	961	1.25	68.3	95.0	34.251	230/460	
		1800	364/5TC	06018ET3H364TC-W22	$7,831	N1	1060	1.25	54.6	95.0	34.251	575	
75	55	3600	364/5TSC	07536ET3E365TSC-W22	$9,533	N1	993	1.25	81.9	93.6	32.338	230/460	
		1800	364/5TC	07518ET3E365TC-W22	$9,148	N1	1024	1.25	84.1	95.4	34.251	230/460	
		1800	364/5TC	07518ET3H365TC-W22	$9,148	N1	1075	1.25	67.3	95.4	34.251	575	
		1200	404/5TC	07512ET3H405TC-W22	$12,549	N1	1337	1.25	67.9	94.5	39.730	575	
100	75	1800	404/5TSC	10018ET3E405TSC-W22	$12,179	N1	1256	1.25	111	95.4	36.732	230/460	
		1800	404/5TC	10018ET3E405TC-W22	$12,179	N1	1256	1.25	111	95.4	39.730	230/460	
		1800	404/5TC	10018ET3H405TC-W22	$12,179	N1	1318	1.25	88.8	95.4	39.730	575	
125	90	1800	444/5TSC	12518ET3G444TSC-W22	$16,218	N1	1759	1.15	139	95.4	41.407	460	
		1800	444/5TC	12518ET3E444TC-W22	$16,218	N1	1887	1.15	139	95.4	45.157	230/460	
		1800	444/5TC	12518ET3G444TC-W22	$16,218	N1	1851	1.15	139	95.4	45.157	460	
		1800	444/5TC	12518ET3H444TC-W22	$16,218	N1	1851	1.15	111	95.4	45.157	575	
150	110	1800	444/5TC	15018ET3E445TC-W22	$18,025	N1	1919	1.15	170	95.8	45.157	230/460	
		1800	444/5TC	15018ET3G445TC-W22	$18,025	N1	1997	1.15	170	95.8	45.157	460	
200	150	1800	445/7TC	20018ET3G447TC-W22	$21,704	N1	2523	1.15	230	96.2	48.701	460	
250	185	1800	445/7TSC	25018ET3G447TSC-W22	$27,795	N1	2361	1.15	281	96.2	44.951	460	
300	220	1800	447/9TC	30018ET3G449TC-W22	$31,990	N1	3069	1.15	330	96.2	56.338	460	

Please refer to inside back cover for description of "NOTES"

For detailed specifications, data sheets, drawings and performance curves visit http://www.weg.net

TEFC - C-Face - Footless

HP	kW	RPM	Frame	Catalog Number	List Price	Mult. Symbol	Approx. Shipping Weight (lbs)	Service Factor	FL Amps @ High	FL. Eff (%)	"C" Dimension (in)	Voltage (V)	Notes
0.33	0.25	3600	56C	.3336ES3E56CFL-S	$270	F1	22	1.15	0.60	62.0	11.142	208-230/460	9,20
		3600	56C	.3336ES3H56CFL-S	$270	F1	22	1.15	0.50	62.0	11.142	575	9,20
		1800	56C	.3318ES3E56CFL-S	$274	F1	24	1.15	0.60	74.0	11.535	208-230/460	9,20
0.5	0.37	3600	56C	.5036ES3E56CFL-S	$282	F1	24	1.15	0.80	68.0	11.535	208-230/460	9;20
		1800	56C	.5018ES3E56CFL-S	$311	F1	26	1.15	0.90	77.0	11.535	208-230/460	9,20
		1800	56C	.5018ES3H56CFL-S	$312	F1	26	1.15	0.70	77.0	11.535	575	9,20
0.75	0.55	3600	56C	.7536ES3E56CFL-S	$311	F1	25	1.15	1.10	72.0	11.535	208-230/460	9,20
		3600	56C	.7536ES3H56CFL-S	$312	F1	25	1.15	0.90	72.0	11.535	575	9,20
		1800	56C	.7518ES3E56CFL-S	$332	F1	28	1.15	1.20	78.5	11.929	208-230/460	9,20
		1800	56C	.7518ES3H56CFL-S	$333	F1	28	1.15	1.00	78.5	11.929	575	9,20
		1200	56C	.7512ES3E56CFL-S	$449	F1	34	1.15	1.30	75.5	12.716	208-230/460	9,20
		1200	56C	.7512ES3H56CFL-S	$450	F1	34	1.15	1.10	75.5	12.716	575	9,20
1	0.75	3600	W56C	00136ET3EW56CFL-S	$420	F1	25	1.15	1.50	78.5	11.106	230/460	9,20
		3600	143TC	00136ET3ER143TC-W22	$577	N1	44	1.25	1.44	81.5	13.065	230/460	15
		1800	56C	00118ET3E56CFL-S	$407	F1	41	1.15	1.50	85.5	13.504	230/460	9,20
		1800	56C	00118ET3H56CFL-S	$407	F1	41	1.15	1.20	85.5	13.504	575	9,20
		1800	143/5TC	00118ET3ER143TC-S	$484	RSP	42	1.15	1.50	85.5	13.583	230/460	9,15
		1800	143TC	00118ET3ER143TC-W22	$572	N1	47	1.25	1.47	85.5	13.065	230/460	15
		1200	56C	00112ET3E56CFL-S	$528	F1	42	1.15	1.60	82.5	13.504	230/460	9,20
		1200	56C	00112ET3H56CFL-S	$528	F1	42	1.15	1.30	82.5	13.504	575	9,20
		1200	143/5TC	00112ET3ER145TC-S	$554	RSP	43	1.15	1.60	82.5	13.583	230/460	9,15,51
		1200	145TC	00112ET3ER145TC-W22	$655	N1	56	1.25	1.73	82.5	16.197	230/460	15
		1200	143/5TC	00112ET3VR145TC-S	554	N1S	38.6	1.15	1.82	82.5	14.960	200/400	9;20
1.5	1.1	3600	56C	00156ET3E56CFL-S	$461	F1	37	1.15	1.90	84.0	13.109	230/460	9,20
		3600	143/5TC	00156ET3ER143TC-S	$497	RSP	39	1.15	1.90	84.0	13.189	230/460	9,15
		3600	143TC	00156ET3ER143TC-W22	$588	N1	48	1.25	1.96	84.0	13.065	230/460	15
		1800	56C	00158ET3E56CFL-S	$463	F1	44	1.15	2.00	86.5	13.504	230/460	9,20
		1800	143/5TC	00158ET3ER145TC-S	$504	RSP	43	1.15	2.00	86.5	13.583	230/460	9,15
		1800	145TC	00158ET3ER145TC-W22	$596	N1	55	1.25	2.02	86.5	14.077	230/460	15
		1200	182/4TC	00152ET3ER182TC-S	$690	RSP	90	1.15	2.20	87.5	16.339	230/460	9,15
		1200	182TC	00152ET3ER182TC-W22	$816	N1	100	1.25	2.54	87.5	16.197	230/460	15,39
2	1.5	3600	56C	00236ET3E56CFL-S	$517	F1	44	1.15	2.50	85.5	13.898	230/460	9,20
		3600	143/5TC	00236ET3ER145TC-S	$539	RSP	45	1.15	2.50	85.5	13.976	230/460	9,15
		3600	145TC	00236ET3ER145TC-W22	$638	N1	55	1.25	2.56	85.5	14.077	230/460	15
		1800	56C	00218ET3E56CFL-S	$506	F1	46	1.15	2.70	86.5	13.898	230/460	9,20
		1800	143/5TC	00218ET3ER145TC-S	$558	RSP	47	1.15	2.70	86.5	13.976	230/460	9,15
		1800	145TC	00218ET3ER145TC-W22	$659	N1	56	1.25	2.76	86.5	14.077	230/460	15
		1200	182/4TC	00212ET3ER184TC-S	$747	RSP	98	1.15	3.00	88.5	17.126	230/460	9,15
		1200	184TC	00212ET3ER184TC-W22	$883	N1	110	1.25	3.22	88.5	17.197	230/460	15

continued on next page

Please refer to inside back cover for description of "NOTES"

For detailed specifications, data sheets, drawings and performance curves visit http://www.weg.net

Data subject to change without notice.

TEFC - C-Face - Footless - *continued*

HP	kW	RPM	Frame	Catalog Number	List Price	Mult. Symbol	Approx. Shipping Weight (lbs)	Service Factor	FL Amps @ High	FL. Eff (%)	"C" Dimension (in)	Voltage (V)	Notes
3	2.2	3600	56C	00336ET3E56CFL-S	$606	F1	54	1.15	3.50	86.5	15.079	230/460	9,20
		3600	56C	00336ET3H56CFL-S	$606	F1	54	1.15	2.80	86.5	15.079	575	9,20
		3600	145TC	00336ET3ER145TC-W22	$677	N1	58	1.25	3.71	86.5	14.077	230/460	15
		3600	182/4TC	00336ET3ER182TC-S	$698	RSP	71	1.15	3.70	86.5	15.551	230/460	9,15
		3600	182TC	00336ET3ER182TC-W22	$826	N1	108	1.25	3.63	86.5	16.197	230/460	15
		1800	182/4TC	00318ET3ER182TC-S	$610	RSP	100	1.15	3.80	89.5	17.913	230/460	9,15
		1800	182TC	00318ET3ER182TC-W22	$721	N1	104	1.25	3.91	89.5	16.197	230/460	15,39
		1200	213/5TC	00312ET3ER213TC-S	$1,028	RSP	148	1.15	4.20	89.5	19.291	230/460	9,15
		1200	213TC	00312ET3ER213TC-W22	$1,203	N1	154	1.25	4.41	89.5	19.399	230/460	15
5	3.7	3600	182/4TC	00536ET3ER184TC-S	$793	RSP	90	1.15	5.90	88.5	16.732	230/460	9,15
		3600	184TC	00536ET3ER184TC-W22	$938	N1	115	1.25	5.90	88.5	17.197	230/460	15
		1800	182/4TC	00518ET3ER184TC-S	$706	RSP	93	1.15	6.50	89.5	17.913	230/460	9,15
		1800	184TC	00518ET3ER184TC-W22	$834	N1	113	1.25	6.45	89.5	17.197	230/460	15
		1200	213/5TC	00512ET3ER215TC-S	$1,206	RSP	162	1.15	6.70	89.5	20.079	230/460	9,15
		1200	215TC	00512ET3ER215TC-W22	$1,426	N1	178	1.25	6.83	89.5	20.895	230/460	15
7.5	5.5	3600	213/5TC	00736ET3ER213TC-S	$1,025	RSP	152	1.15	8.70	89.5	21.102	230/460	9,15
		3600	213TC	00736ET3ER213TC-W22	$1,212	N1	155	1.25	8.76	89.5	19.399	230/460	15
		1800	213/5TC	00718ET3ER213TC-S	$994	RSP	140	1.15	9.10	91.7	18.898	230/460	9,15
		1800	213TC	00718ET3ER213TC-W22	$1,175	N1	167	1.25	9.18	91.7	19.399	230/460	15
		1200	254/6TC	00712ET3ER254TC-S	$1,859	RSP	257	1.15	10.0	91.0	22.559	230/460	9,15
10	7.5	3600	213/5TC	01036ET3ER215TC-S	$1,205	RSP	162	1.15	11.5	90.2	22.283	230/460	9,15
		3600	215TC	01036ET3ER215TC-W22	$1,424	N1	179	1.25	11.6	90.2	20.895	230/460	15
		1800	213/5TC	01018ET3ER215TC-S	$1,154	RSP	151	1.15	12.2	91.7	19.291	230/460	9,15
		1800	215TC	01018ET3ER215TC-W22	$1,366	N1	187	1.25	12.4	91.7	20.895	230/460	15
		1800	213/5TC	01018ET3HR215TC-S	$1,154	RSP	151	1.15	9.80	91.7	19.291	575	9,15
		1200	254/6TC	01012ET3ER256TC-S	$2,148	RSP	286	1.15	13.8	91.0	23.346	230/460	9,15,51
15	11	3600	254/6TC	01536ET3ER254TC-S	$1,649	RSP	216	1.15	17.4	91.0	22.559	230/460	9,15
		3600	254TC	01536ET3ER254TC-W22	$1,950	N1	300	1.25	17.2	91.0	25.063	230/460	15
		1800	254/6TC	01518ET3ER254TC-S	$1,670	RSP	248	1.15	18.2	92.4	22.559	230/460	9,15
		1800	254TC	01518ET3ER254TC-W22	$1,975	N1	348	1.25	18.0	92.4	25.063	230/460	15
		1800	254/6TC	01518ET3HR254TC-S	$1,670	RSP	248	1.15	14.6	92.4	22.559	575	9,15
20	15	3600	254/6TC	02036ET3ER256TC-S	$2,136	RSP	256	1.15	22.7	91.0	23.346	230/460	9,15
		3600	256TC	02036ET3ER256TC-W22	$2,525	N1	335	1.25	23.2	91.0	26.795	230/460	15
		1800	254/6TC	02018ET3ER256TC-S	$1,978	RSP	279	1.15	24.7	93.0	23.346	230/460	9,15
		1800	256TC	02018ET3ER256TC-W22	$2,338	N1	407	1.25	24.1	93.0	26.795	230/460	15
25	18.5	3600	284TSC	02536ET3ER284TSC-W22	$3,187	N1	406	1.25	28.5	91.7	27.305	230/460	15
		1800	284TC	02518ET3ER284TC-W22	$2,925	N1	441	1.25	29.5	93.6	28.677	230/460	15
30	22	3600	286TSC	03036ET3ER286TSC-W22	$3,767	N1	436	1.25	33.8	91.7	28.801	230/460	15
		1800	286TC	03018ET3ER286TC-W22	$3,421	N1	489	1.25	35.1	93.6	30.173	230/460	15
		1200	326TSC	03012ET3ER326TSC-W22	$5,768	N1	732	1.25	36.2	93.0	32.254	230/460	15
40	30	3600	324TSC	04036ET3ER324TSC-W22	$4,988	N1	684	1.25	45.8	92.4	30.758	230/460	15
		1800	324TC	04018ET3ER324TC-W22	$4,429	N1	613	1.25	47.1	94.1	32.258	230/460	15
50	37	1800	326TC	05018ET3ER326TC-W22	$5,378	N1	648	1.25	59.2	94.5	33.754	230/460	15
60	45	1800	364/5TC	06018ET3ER364TC-W22	$8,053	N1	869	1.25	68.3	95.0	37.440	230/460	15
75	55	1800	364/5TC	07518ET3ER365TC-W22	$9,408	N1	1256	1.25	84.1	95.4	37.440	230/460	15

Please refer to inside back cover for description of "NOTES"

For detailed specifications, data sheets, drawings and performance curves visit http://www.weg.net

Three-Phase General Purpose Motors

W40 - ODP CAST IRON

WEG Open Drip Proof (ODP) motor is a general purpose line designed for environments where dirt and moisture are minimal. The ODP cast iron frame is designed to provide maximum ventilation and heat dissipation, offering low vibration levels, high mechanical stiffness and durability. Widely used in applications such as compressors, pumps and chillers, the ODP motor line meets or exceeds the efficiency levels determined by International Standards and the minimum efficiency level programs in force worldwide.

Standard Features

- Rated output: NEMA (60 Hz) - 15 to 2,500 HP
- Number of poles: 2 through 6
- Frame sizes NEMA 254T to L6808/09
- Frequency: 50 or 60 Hz
- Voltage: 208 to 4,160 V
- Degree of protection ODP (IP23) for frames 256T to L5810 WPI (IP24) for frame size L6808/09
- Efficiency levels: NEMA Premium® Efficiency (60Hz)
- Color: RAL 5009
- Solid Mounting Feet
- Cooling method: IC-01 according to DIN EN 60034-6
- Mounting: F-1
- Frame, end-shields and terminal box material: FC 200 cast iron
- Flying leads for motor connection
- PT100 3 wires - one per phase for frame size 5010/11 up to L6808/09 - Voltage 1.2kV and above

Optional Features

- Voltage: 5,000 to 6,600 V
- Accessories terminal box (standard for medium and high voltage motors)
- Thermal protections: Thermostats or RTD's (Pt-100) on windings or bearings
- Space heaters
- Cable glands
- Roller bearings
- Rodent Screens

Features that make a difference:

- Nameplated 50 Hz at reduced HP IE3 Efficiency and CE Mark (10-60HP)
- Class F insulation (Impregnation Resin and Magnet wire are class H)
- Class B Rise at 1.15 Service Factor
- F1 Mounted (Cast Iron Frame motors are F2 convertible)
- Stainless Steel Nameplate - Laser etched with high contrast background (Cast Iron Frames only)
- Cast Iron Frames: Regreasable ball bearings (Frames 254T and up)

Inverter Rated:
1000:1 for variable torque
2:1 for constant torque

Data subject to change without notice.

Three-Phase General Purpose Motors

ODP ROLLED STEEL

Standard Features:

- Rated Output: 0.25 to 25 HP
- Number of Poles: 2 through 6
- Class F insulation
- Frame Sizes: NEMA 56 to 254/6T
- Efficiency levels: NEMA Premium®
- Frequency: 60 Hz (dual rated 50 Hz 190-220/380-415V)
- IP21 standard
- F1 mount as standard
- Foot mount / C-face / Footless availability
- Enclosure: ODP
- Aluminum endshields
- Cast Iron flanges for improved strength (182/4TC and larger)
- Internal bolts, giving a clean surface to the motor, avoiding trapping materials and allowing easy paint job after assembly to the load if required
- Double shielded ball bearings on frames 56 to 213/5T. Optional double sealed ball bearings and/or bearing cap
- Versions: General Purpose, Jet Pump, Close-coupled Pump type “JM” and “JP” and Compressor Duty

Optional Features:

- F2 and Build Option F3 mount
- Build Option Enclosure: ODPAO
- Regreasable bearings optional on 182/4T and 213/5T
- Double sealed ball bearings and/or bearing cap
- Drip cover
- Internal AEGIS® SGR
- Space heaters and thermal protection (thermostats or thermistors)
- Refer to the mod section for more options

Features that make a difference:

- New ventilation system for improved thermal performance
- Robust feet design suitable for tougher applications
- New and more robust eyebolts design (frames 182/4T and up) plus a second eyebolt on non-drive end allowing vertical lifting capability (frames 213/5T and 254/6T)
- Oversized diagonally split aluminum terminal box that exceeds IP55 requirements
- Terminal box rotatable in 90 degrees increments for flexibility during installation
- Option for internal AEGIS® SGR
- Color coded leads as standard for easy wiring
- Regreasable ball bearings on 254/6T frame as standard (optional for 182/4T and 213/5T)
- Bearing cap as standard on flanged motors, optional on non flanged
- Suitable for VFD operation as per NEMA MG1 part 31.4.4.2
- Motor frame painting system 500 hours salt spray resistant

ODP Foot Mount

HP	kW	RPM	Frame	Catalog Number	List Price	Mult. Symbol	Approx. Shipping Weight (lbs)	Service Factor	FL Amps @ High	FL. Eff (%)	C Dimension (in)	Voltage (V)	Notes
0.25	0.18	3600	56	.25360T3E56-S	$231	F2B	19	1.35	0.46	65.6	10.315	230/460	9
		1800	48	.25180T3E48-S	$235	F2B	18	1.35	0.48	70.0	9.492	230/460	9
		1800	56	.25180T3E56-S	$235	F2B	19	1.35	0.53	69.5	9.921	230/460	9
		1200	56	.25120T3E56-S	$288	F2B	21	1.35	0.55	67.5	10.315	230/460	9
0.33	0.25	3600	56	.33360T3E56-S	$242	F2B	19	1.35	0.61	69.5	10.315	230/460	9
		1800	56	.33180T3E56-S	$256	F2B	20	1.35	0.67	73.4	10.315	230/460	9
		1800	56	.33180T3H56-S	$269	F2B	20	1.35	0.54	73.4	10.315	575	9
		1200	56	.33120T3E56-S	$333	F2B	22	1.35	0.70	71.4	10.315	230/460	9
0.5	0.37	3600	56	.50360T3E56-S	$258	F2B	20	1.25	0.81	73.4	10.315	230/460	9
		1800	56	.50180T3E56-S	$296	F2B	24	1.25	0.86	78.2	10.709	230/460	9
		1800	56	.50180T3H56-S	$311	F2B	24	1.25	0.69	78.2	10.709	575	9
		1200	56	.50120T3E56-S	$349	F2B	25	1.25	0.93	75.3	10.709	230/460	9
0.75	0.55	3600	56	.75360T3E56-S	$305	F2B	22	1.25	1.14	76.8	10.709	230/460	9
		1800	56	.75180T3E56-S	$330	F2B	27	1.25	1.15	81.1	11.102	230/460	9
		1800	56	.75180T3H56-S	$347	F2B	27	1.25	0.92	81.1	11.102	575	9
		1200	56H	.75120T3E56-S	$384	F2B	38	1.15	1.26	81.7	12.677	230/460	9
1	0.75	3600	56	001360T3E56-S	$355	F2B	23	1.25	1.51	77.0	10.709	230/460	9
		3600	143/5T	001360T3E143T-S	$385	N1S	29	1.15	1.40	80.0	11.181	230/460	9
		1800	56	001180T3E56-S	$350	F2B	30	1.15	1.57	83.5	11.495	230/460	9
		1800	143/5T	001180T3E143T-S	$390	N1S	38	1.15	1.50	85.5	11.181	230/460	9
		1800	143/5T	001180T3H143T-S	$390	N1S	38	1.15	1.20	85.5	11.181	575	9
		1800	143/5T	001180T3P143T-S	$390	N1S	38	1.15	3.50	85.5	11.181	200	9
		1200	56H	001120T3E56-S	$458	F2B	42	1.15	1.68	82.5	13.070	230/460	9
		1200	143/5T	001120T3E145T-S	$446	N1S	38	1.15	1.70	82.5	11.181	230/460	9
		1200	143/5T	001120T3H145T-S	$446	N1S	38	1.15	1.30	82.5	11.181	575	9
1.5	1.1	3600	56	001560T3E56-S	$380	F2B	30	1.15	1.85	84.0	11.889	230/460	9
		3600	143/5T	001560T3E143T-S	$442	N1S	33	1.15	1.90	84.0	11.181	230/460	9
		3600	143/5T	001560T3H143T-S	$442	N1S	33	1.15	1.50	84.0	11.181	575	9
		1800	56H	001580T3E56-S	$361	F2B	40	1.15	2.10	86.5	12.677	230/460	9
		1800	143/5T	001580T3E145T-S	$449	N1S	45	1.15	2.10	86.5	12.362	230/460	9
		1800	143/5T	001580T3H145T-S	$449	N1S	45	1.15	1.70	86.5	12.362	575	9
		1800	143/5T	001580T3P145T-S	$449	N1S	45	1.15	4.80	86.5	12.362	200	9
		1200	182/4T	001520T3E182T-S	$588	N1S	63	1.15	2.30	86.5	13.976	230/460	9
2	1.5	3600	56H	002360T3E56-S	$436	F2B	38	1.15	2.42	85.5	12.677	230/460	9
		3600	143/5T	002360T3E145T-S	$487	N1S	40	1.15	2.40	85.5	11.969	230/460	9
		3600	143/5T	002360T3H145T-S	$487	N1S	40	1.15	1.90	85.5	11.969	575	9
		1800	56H	002180T3E56-S	$371	F2B	40	1.15	2.69	86.5	12.677	230/460	9
		1800	143/5T	002180T3E145T-S	$492	N1S	43	1.15	2.70	86.5	12.362	230/460	9
		1800	143/5T	002180T3H145T-S	$492	N1S	43	1.15	2.20	86.5	12.362	575	9
		1800	143/5T	002180T3P145T-S	$492	N1S	43	1.15	6.20	86.5	12.362	200	9
		1200	182/4T	002120T3E184T-S	$597	N1S	73	1.15	3.00	87.5	14.764	230/460	9
		1200	182/4T	002120T3H184T-S	$597	N1S	73	1.15	2.40	87.5	14.764	575	9

continued on next page

Please refer to inside back cover for description of "NOTES"

For detailed specifications, data sheets, drawings and performance curves visit http://www.weg.net

Data subject to change without notice.

ODP Foot Mount - *continued*

HP	kW	RPM	Frame	Catalog Number	List Price	Mult. Symbol	Approx. Shipping Weight (lbs)	Service Factor	FL Amps @ High	FL. Eff (%)	C Dimension (in)	Voltage (V)	Notes
3	2.2	3600	56H	00336OT3E56-S	$485	F2B	42	1.15	3.59	85.5	13.070	230/460	9
		3600	143/5T	00336OT3E145T-S	$545	N1S	43	1.15	3.60	85.5	12.362	230/460	9
		3600	143/5T	00336OT3H145T-S	$545	N1S	43	1.15	2.90	85.5	12.362	575	9
		1800	56HZ	00318OT3E56Z-S	$481	F2B	48	1.15	3.97	86.9	13.071	230/460	9
		1800	182/4T	00318OT3E182T-S	$524	N1S	73	1.15	3.90	89.5	15.157	230/460	9
		1800	182/4T	00318OT3H182T-S	$524	N1S	73	1.15	3.10	89.5	15.157	575	9
		1800	182/4T	00318OT3P182T-S	$524	N1S	73	1.15	8.90	89.5	15.157	200	9
		1800	182/4T	00318OT3V182T-S	$524	N1S	72	1.15	4.40	89.5	15.157	200/400	9
		1200	213/5T	00312OT3E213T-S	$775	N1S	113	1.15	4.20	88.5	16.575	230/460	9
		1200	213/5T	00312OT3H213T-S	$775	N1S	113	1.15	3.30	88.5	16.575	575	9
5	3.7	3600	182/4T	00536OT3E182T-S	$651	N1S	60	1.15	6.10	86.5	13.977	230/460	9
		3600	182/4T	00536OT3H182T-S	$651	N1S	68	1.15	4.90	86.5	13.977	575	9
		3600	182/4T	00536OT3V182T-S	$651	N1S	60	1.15	7.00	86.5	13.977	200/400	9
		1800	182/4T	00518OT3E184T-S	$630	N1S	88	1.15	6.30	89.5	16.339	230/460	9
		1800	182/4T	00518OT3H184T-S	$630	N1S	88	1.15	5.10	89.5	16.339	575	9
		1800	182/4T	00518OT3P184T-S	$630	N1S	88	1.15	14.6	89.5	16.339	200	9
		1800	182/4T	00518OT3V184T-S	$630	N1S	88	1.15	7.30	89.5	16.339	200/400	9
		1200	213/5T	00512OT3E215T-S	$1,057	N1S	135	1.15	6.70	89.5	16.969	230/460	9
		1200	213/5T	00512OT3H215T-S	$1,057	N1S	135	1.15	5.40	89.5	16.969	575	9
7.5	5.5	3600	182/4T	00736OT3E184T-S	$920	N1S	70	1.15	8.70	88.5	14.764	230/460	9
		3600	182/4T	00736OT3H184T-S	$920	N1S	70	1.15	6.90	88.5	14.764	575	9
		1800	213/5T	00718OT3E213T-S	$910	N1S	125	1.15	9.30	91.0	16.575	230/460	9
		1800	213/5T	00718OT3H213T-S	$910	N1S	125	1.15	7.40	91.0	16.575	575	9
		1800	213/5T	00718OT3P213T-S	$910	N1S	125	1.15	21.3	91.0	16.575	200	9
		1200	254/6T	00712OT3E254T-S	$1,467	N1S	209	1.15	10.2	90.2	20.472	230/460	9
		1200	254/6T	00712OT3H254T-S	$1,467	N1S	209	1.15	8.20	90.2	20.472	575	9
		1200	254T	00712OT3E254T-W40	$1,467	N1B	249	1.25	9.94	90.2	20.537	230/460	
10	7.5	3600	213/5T	01036OT3E213T-S	$1,081	N1S	122	1.15	12.0	89.5	16.575	230/460	9
		3600	213/5T	01036OT3H213T-S	$1,081	N1S	126	1.15	9.60	89.5	16.575	575	9
		1800	213/5T	01018OT3E215T-S	$1,102	N1S	130	1.15	12.4	91.7	16.575	230/460	9
		1800	213/5T	01018OT3H215T-S	$1,102	N1S	130	1.15	9.90	91.7	16.575	575	9
		1800	213/5T	01018OT3P215T-S	$1,102	N1S	130	1.15	28.5	91.7	16.575	200	9
		1200	254/6T	01012OT3E256T-S	$1,717	N1S	237	1.15	13.9	91.7	20.472	230/460	9
		1200	254/6T	01012OT3H256T-S	$1,717	N1S	237	1.15	11.1	91.7	20.472	575	9
		1200	254/6T	01012OT3E256T-W40	$1,717	N1B	289	1.25	12.8	91.7	22.285	230/460	
15	11	3600	213/5T	01536OT3E215T-S	$1,492	N1S	141	1.15	17.2	90.2	17.756	230/460	9
		3600	213/5T	01536OT3H215T-S	$1,492	N1S	141	1.15	13.8	90.2	17.756	575	9
		1800	254/6T	01518OT3E254T-S	$1,477	N1S	211	1.15	18.6	93.0	20.472	230/460	9
		1800	254/6T	01518OT3H254T-S	$1,477	N1S	211	1.15	14.9	93.0	20.472	575	9
		1800	254/6T	01518OT3P254T-S	$1,477	N1S	211	1.15	42.8	93.0	20.472	200	9
		1800	254/6T	01518OT3V254T-S	$1,477	N1S	211	1.15	21.4	93.0	20.472	200/400	9
		1800	254T	01518OT3E254T-W40	$1,477	N1B	284	1.25	17.5	93.0	20.537	230/460	
		1800	254T	01518OT3H254T-W40	$1,477	N1B	283	1.25	14.0	93.0	20.537	575	
		1800	254T	01518OT3P254T-W40	$1,477	N1B	283	1.25	40.3	93.0	20.537	200	
		1200	284T	01512OT3E284T-W40	$2,412	N1B	339	1.25	18.4	91.7	23.158	230/460	
		1200	284T	01512OT3H284T-W40	$2,412	N1B	338	1.25	14.7	91.7	23.158	575	

continued on next page

Please refer to inside back cover for description of "NOTES"

For detailed specifications, data sheets, drawings and performance curves visit http://www.weg.net

ODP Foot Mount - *continued*

HP	kW	RPM	Frame	Catalog Number	List Price	Mult. Symbol	Approx. Shipping Weight (lbs)	Service Factor	FL Amps @ High	FL. Eff (%)	C Dimension (in)	Voltage (V)	Notes
20	15	3600	254/6T	020360T3E254T-S	$1,760	N1S	187	1.15	23.8	91.0	20.472	230/460	9
		3600	254/6T	020360T3H254T-S	$1,760	N1S	187	1.15	19.0	91.0	20.472	575	9;51
		3600	254T	020360T3E254T-W40	$1,760	N1B	230	1.25	24.3	91.0	20.537	230/460	
		3600	254T	020360T3H254T-W40	$1,760	N1B	221	1.25	19.4	91.0	20.537	575	
		1800	254/6T	020180T3E256T-S	$1,832	N1S	235	1.15	25.0	93.0	20.472	230/460	9
		1800	254/6T	020180T3H256T-S	$1,832	N1S	235	1.15	20.0	93.0	20.472	575	9
		1800	254/6T	020180T3P256T-S	$1,832	N1S	235	1.15	57.5	93.0	20.472	200	9
		1800	254/6T	020180T3V256T-S	$1,832	N1S	235	1.15	28.8	93.0	20.472	200/400	9
		1800	254/6T	020180T3E256T-W40	$1,832	N1B	320	1.25	24.1	93.0	22.285	230/460	
		1800	254/6T	020180T3H256T-W40	$1,832	N1B	300	1.25	19.3	93.0	22.285	575	
		1800	254/6T	020180T3P256T-W40	$1,832	N1B	319	1.25	55.4	93.0	22.285	200	
		1200	284/6T	020120T3E286T-W40	$3,034	N1B	414	1.25	24.3	92.4	24.658	230/460	
		1200	284/6T	020120T3H286T-W40	$3,034	N1B	413	1.25	19.4	92.4	24.658	575	
25	18.5	3600	254/6T	025360T3E256T-S	$2,139	N1S	202	1.15	29.1	91.7	20.472	230/460	9
		3600	254/6T	025360T3H256T-S	$2,139	N1S	202	1.15	23.3	91.7	20.472	575	9;51
		3600	254/6T	025360T3E256T-W40	$2,139	N1B	260	1.25	28.8	91.7	22.285	230/460	
		3600	254/6T	025360T3H256T-W40	$2,139	N1B	258	1.25	23.0	91.7	22.285	575	
		1800	284TS	025180T3E284TS-W40	$2,160	N1B	379	1.25	29.5	93.6	21.783	230/460	
		1800	284TS	025180T3H284TS-W40	$2,160	N1B	377	1.25	23.6	93.6	21.783	575	
		1800	284TS	025180T3V284TS-W40	$2,160	N1B	396	1.25	33.9	93.6	21.783	200/400	
		1800	284T	025180T3E284T-W40	$2,160	N1B	380	1.25	29.5	93.6	23.158	230/460	
		1800	284T	025180T3H284T-W40	$2,160	N1B	379	1.25	23.6	93.6	23.158	575	
		1800	284T	025180T3P284T-W40	$2,160	N1B	380	1.25	67.9	93.6	23.158	200	
		1200	324T	025120T3E324T-W40	$3,519	N1B	485	1.25	30.8	93.0	25.807	230/460	
30	22	3600	284TS	030360T3E284TS-W40	$2,487	N1B	332	1.25	35.0	91.7	21.783	230/460	
		3600	284TS	030360T3H284TS-W40	$2,487	N1B	330	1.25	28.0	91.7	21.783	575	
		3600	284TS	030360T3V284TS-W40	$2,487	N1B	333	1.25	40.3	91.7	21.783	200/400	
		1800	284/6TS	030180T3E286TS-W40	$2,530	N1B	425	1.25	34.9	94.1	23.283	230/460	
		1800	284/6TS	030180T3H286TS-W40	$2,530	N1B	429	1.25	27.9	94.1	23.283	575	
		1800	284/6TS	030180T3V286TS-W40	$2,590	N1B	424	1.25	40.1	94.1	23.283	200/400	
		1800	284/6T	030180T3E286T-W40	$2,530	N1B	427	1.25	34.9	94.1	24.658	230/460	
		1800	284/6T	030180T3H286T-W40	$2,530	N1B	426	1.25	27.9	94.1	24.658	575	
		1800	284/6T	030180T3P286T-W40	$2,530	N1B	427	1.25	80.3	94.1	24.658	200	
		1200	324/6T	030120T3E326T-W40	$3,890	N1B	548	1.25	36.0	93.6	27.307	230/460	
		1200	324/6T	030120T3H326T-W40	$3,890	N1B	577	1.25	28.8	93.6	27.307	575	

continued on next page

Please refer to inside back cover for description of "NOTES"

For detailed specifications, data sheets, drawings and performance curves visit http://www.weg.net

Data subject to change without notice.

ODP Foot Mount - *continued*

HP	kW	RPM	Frame	Catalog Number	List Price	Mult. Symbol	Approx. Shipping Weight (lbs)	Service Factor	FL Amps @ High	FL. Eff (%)	C Dimension (in)	Voltage (V)	Notes
40	30	3600	284/6TS	04036OT3E286TS-W40	$3,308	N1B	375	1.25	46.8	92.4	23.283	230/460	
		3600	284/6TS	04036OT3H286TS-W40	$3,308	N1B	375	1.25	37.4	92.4	23.283	575	
		3600	284/6TS	04036OT3P286TS-W40	$3,308	N1B	393	1.25	108	92.4	23.283	200	
		3600	284/6TS	04036OT3V286TS-W40	$3,308	N1B	390	1.25	53.8	92.4	23.283	200/400	
		1800	324TS	04018OT3E324TS-W40	$3,095	N1B	479	1.25	47.6	94.1	24.307	230/460	
		1800	324TS	04018OT3H324TS-W40	$3,095	N1B	547	1.25	38.1	94.1	24.307	575	
		1800	324TS	04018OT3V324TS-W40	$3,095	N1B	506	1.25	54.7	94.1	24.307	200/400	
		1800	324T	04018OT3E324T-W40	$3,095	N1B	481	1.25	47.6	94.1	25.807	230/460	
		1800	324T	04018OT3H324T-W40	$3,095	N1B	475	1.25	38.1	94.1	25.807	575	
		1800	324T	04018OT3P324T-W40	$3,095	N1B	481	1.25	110	94.1	25.807	200	
		1200	364/5T	04012OT3E364T-W40	$5,544	N1B	855	1.25	47.1	94.1	29.725	230/460	
		1200	364/5T	04012OT3H364T-W40	$5,544	N1B	849	1.25	37.7	94.1	29.725	575	
50	37	3600	324TS	05036OT3E324TS-W40	$3,820	N1B	459	1.25	58.7	93.0	24.307	230/460	
		3600	324TS	05036OT3H324TS-W40	$3,820	N1B	456	1.25	47.0	93.0	24.307	575	
		3600	324TS	05036OT3V324TS-W40	$3,820	N1B	459	1.25	67.5	93.0	24.307	200/400	
		1800	324/6TS	05018OT3E326TS-W40	$3,788	N1B	542	1.25	58.5	94.5	25.807	230/460	
		1800	324/6TS	05018OT3G326TS-W40	$3,788	N1B	541	1.25	58.5	94.5	25.807	460	
		1800	324/6TS	05018OT3H326TS-W40	$3,788	N1B	533	1.25	46.8	94.5	25.807	575	
		1800	324/6TS	05018OT3V326TS-W40	$3,788	N1B	574	1.25	67.3	94.5	25.807	200/400	
		1800	324/6T	05018OT3E326T-W40	$3,788	N1B	544	1.25	58.5	94.5	27.307	230/460	
		1800	324/6T	05018OT3H326T-W40	$3,788	N1B	535	1.25	46.8	94.5	27.307	575	
		1800	324/6T	05018OT3P326T-W40	$3,788	N1B	545	1.25	135	94.5	27.307	200	
		1200	364/5T	05012OT3E365T-W40	$6,392	N1B	886	1.25	58.1	94.1	29.725	230/460	
		1200	364/5T	05012OT3V365T-W40	$6,392	N1B	884	1.25	66.8	94.1	29.725	200/400	
60	45	3600	324/6TS	06036OT3E326TS-W40	$4,581	N1B	504	1.25	71.0	93.6	25.807	230/460	
		3600	324/6TS	06036OT3G326TS-W40	$4,581	N1B	502	1.25	71.0	93.6	25.807	460	
		3600	324/6TS	06036OT3H326TS-W40	$4,581	N1B	501	1.25	56.8	93.6	25.807	575	
		3600	324/6TS	06036OT3V326TS-W40	$4,581	N1B	510	1.25	81.7	93.6	25.807	200/400	
		1800	364/5TS	06018OT3E364TS-W40	$4,443	N1B	851	1.25	69.9	95.0	27.522	230/460	
		1800	364/5TS	06018OT3G364TS-W40	$4,443	N1B	849	1.25	69.9	95.0	27.522	460	
		1800	364/5TS	06018OT3H364TS-W40	$4,443	N1B	847	1.25	55.9	95.0	27.522	575	
		1800	364/5TS	06018OT3V364TS-W40	$4,443	N1B	850	1.25	80.4	95.0	27.522	200/400	51
		1800	364/5T	06018OT3E364T-W40	$4,443	N1B	855	1.25	69.9	95.0	29.725	230/460	
		1800	364/5T	06018OT3G364T-W40	$4,443	N1B	847	1.25	69.9	95.0	29.725	460	
		1800	364/5T	06018OT3H364T-W40	$4,443	N1B	852	1.25	55.9	95.0	29.725	575	
		1200	404/5T	06012OT3E404T-W40	$7,562	N1B	1045	1.25	70.3	94.5	34.100	230/460	

continued on next page

Please refer to inside back cover for description of "NOTES"

For detailed specifications, data sheets, drawings and performance curves visit http://www.weg.net

ODP Foot Mount - *continued*

HP	kW	RPM	Frame	Catalog Number	List Price	Mult. Symbol	Approx. Shipping Weight (lbs)	Service Factor	FL Amps @ High	FL. Eff (%)	C Dimension (in)	Voltage (V)	Notes
75	55	3600	364/5TS	075360T3E364TS-W40	$5,799	N1B	789	1.25	84.8	93.6	27.522	230/460	
		3600	364/5TS	075360T3G364TS-W40	$5,799	N1B	794	1.25	84.8	93.6	27.522	460	
		3600	364/5TS	075360T3H364TS-W40	$5,799	N1B	794	1.25	67.8	93.6	27.522	575	
		3600	364/5TS	075360T3V364TS-W40	$5,799	N1B	789	1.25	97.5	93.6	27.522	200/400	
		1800	364/5TS	075180T3E365TS-W40	$5,658	N1B	874	1.25	85.5	95.0	27.522	230/460	
		1800	364/5TS	075180T3G365TS-W40	$5,658	N1B	872	1.25	85.5	95.0	27.522	460	
		1800	364/5TS	075180T3H365TS-W40	$5,658	N1B	872	1.25	68.4	95.0	27.522	575	
		1800	364/5TS	075180T3V365TS-W40	$5,658	N1B	876	1.25	98.3	95.0	27.522	200/400	
		1800	364/5T	075180T3E365T-W40	$5,658	N1B	879	1.25	85.5	95.0	29.725	230/460	
		1800	364/5T	075180T3ERB365T-W40	$6,632	N1B	875	1.25	85.5	95.0	29.725	230/460	14
		1800	364/5T	075180T3G365T-W40	$5,658	N1B	877	1.25	85.5	95.0	29.725	460	
		1800	364/5T	075180T3GRB365T-W40	$6,632	N1B	897	1.25	85.5	95.0	29.725	460	14
		1800	364/5T	075180T3H365T-W40	$5,658	N1B	876	1.25	68.4	95.0	29.725	575	
		1200	404/5T	075120T3E405T-W40	$8,358	N1B	1077	1.25	85.9	94.5	34.100	230/460	
100	75	3600	364/5TS	100360T3E365TS-W40	$6,644	N1B	842	1.25	116	93.6	27.522	230/460	
		3600	364/5TS	100360T3G365TS-W40	$6,644	N1B	840	1.25	116	93.6	27.522	460	
		3600	364/5TS	100360T3H365TS-W40	$6,644	N1B	836	1.25	92.8	93.6	27.522	575	
		3600	364/5TS	100360T3V365TS-W40	$6,644	N1B	835	1.25	133	93.6	27.522	200/400	
		1800	404/5TS	100180T3E404TS-W40	$7,141	N1B	1048	1.25	115	95.4	31.100	230/460	
		1800	404/5TS	100180T3G404TS-W40	$7,141	N1B	1043	1.25	115	95.4	31.100	460	
		1800	404/5TS	100180T3V404TS-W40	$7,141	N1B	1049	1.25	132	95.4	31.100	200/400	
		1800	404/5T	100180T3E404T-W40	$7,141	N1B	1064	1.25	115	95.4	34.100	230/460	
		1800	404/5T	100180T3ERB404T-W40	$7,141	N1B	1086	1.25	115	95.4	34.100	230/460	14
		1800	404/5T	100180T3G404T-W40	$7,141	N1B	1059	1.25	115	95.4	34.100	460	
		1800	404/5T	100180T3GRB404T-W40	$7,141	N1B	1081	1.25	115	95.4	34.100	460	14
		1800	404/5T	100180T3H404T-W40	$7,141	N1B	1059	1.25	92.0	95.4	34.100	575	
		1200	444/5T	100120T3E444T-W40	$11,863	N1B	1497	1.25	127	95.0	38.108	230/460	
		1200	444/5T	100120T3G444T-W40	$11,863	N1B	1490	1.25	127	95.0	38.108	460	
125	90	3600	404/5TS	125360T3E404TS-W40	$8,826	N1B	975	1.25	136	94.1	31.100	230/460	
		3600	404/5TS	125360T3G404TS-W40	$8,826	N1B	971	1.25	136	94.1	31.100	460	
		3600	404/5TS	125360T3H404TS-W40	$8,826	N1B	969	1.25	109	94.1	31.100	575	
		1800	404/5TS	125180T3E405TS-W40	$7,981	N1B	1123	1.25	138	95.4	31.100	230/460	
		1800	404/5TS	125180T3G405TS-W40	$7,981	N1B	1119	1.25	138	95.4	31.100	460	
		1800	404/5T	125180T3E405T-W40	$7,981	N1B	1139	1.25	138	95.4	34.100	230/460	
		1800	404/5T	125180T3ERB405T-W40	$7,981	N1B	1161	1.25	138	95.4	34.100	230/460	14
		1800	404/5T	125180T3G405T-W40	$7,981	N1B	1135	1.25	138	95.4	34.100	460	
		1800	404/5T	125180T3GRB405T-W40	$7,981	N1B	1157	1.25	138	95.4	34.100	460	14
		1800	404/5T	125180T3H405T-W40	$7,981	N1B	1134	1.25	110	95.4	34.100	575	
		1200	444/5T	125120T3G445T-W40	$12,753	N1B	1544	1.25	154	95.0	38.108	460	
150	110	3600	404/5TS	150360T3G405TS-W40	$11,416	N1B	988	1.25	167	94.1	31.100	460	
		3600	404/5TS	150360T3H405TS-W40	$11,416	N1B	987	1.25	134	94.1	31.100	575	
		1800	444/5TS	150180T3G444TS-W40	$10,668	N1B	1474	1.25	170	95.8	34.358	460	
		1800	444/5T	150180T3G444T-W40	$10,668	N1B	1530	1.25	170	95.8	38.108	460	
		1800	444/5T	150180T3GRB444T-W40	$10,668	N1B	1541	1.25	170	95.8	38.108	460	14
		1800	444/5T	150180T3H444T-W40	$10,668	N1B	1526	1.25	136	95.8	38.108	575	
		1200	444/5T	150120T3G445T-W40	$13,615	N1B	1686	1.25	183	95.4	38.108	460	

continued on next page

Please refer to inside back cover for description of "NOTES"

For detailed specifications, data sheets, drawings and performance curves visit http://www.weg.net

Data subject to change without notice.

ODP Foot Mount - *continued*

HP	kW	RPM	Frame	Catalog Number	List Price	Mult. Symbol	Approx. Shipping Weight (lbs)	Service Factor	FL Amps @ High	FL. Eff (%)	C Dimension (in)	Voltage (V)	Notes
200	150	3600	444/5TS	200360T3G444TS-W40	$14,504	N1B	1414	1.15	225	95.0	34.358	460	
		3600	444/5TS	200360T3H444TS-W40	$14,504	N1B	1413	1.15	180	95.0	34.358	575	
		1800	444/5TS	200180T3G445TS-W40	$13,004	N1B	1548	1.15	234	95.8	34.358	460	
		1800	444/5T	200180T3G445T-W40	$13,004	N1B	1604	1.15	234	95.8	38.108	460	
		1800	444/5T	200180T3GRB445T-W40	$13,004	N1B	1615	1.15	234	95.8	38.108	460	14
		1200	447/9T	200120T3G447/9T-W40	$23,380	N1B	2214	1.15	241	95.4	48.317	460	37
250	185	3600	444/5TS	250360T3G445TS-W40	$18,983	N1B	1527	1.15	278	95.0	34.358	460	
		3600	444/5TS	250360T3H445TS-W40	$18,983	N1B	1522	1.15	222	95.0	34.358	575	
		1800	444/5TS	250180T3G445TS-W40	$15,513	N1B	1623	1.15	289	95.8	34.358	460	
		1800	444/5T	250180T3G445T-W40	$15,513	N1B	1679	1.15	289	95.8	38.108	460	
		1800	444/5T	250180T3GRB445T-W40	$15,513	N1B	1691	1.15	289	95.8	38.108	460	14
		1800	444/5T	250180T3H445T-W40	$15,513	N1B	1680	1.15	231	95.8	38.108	575	51
		1200	447/9T	250120T3G447/9T-W40	$27,249	N1B	2379	1.15	299	95.8	48.317	460	37
300	220	3600	444/5TS	300360T3G445TS-W40	$22,294	N1B	1593	1.15	329	95.4	34.358	460	
		1800	447/9TS	300180T3G447/9TS-W40	$24,878	N1B	2083	1.15	324	95.8	42.959	460	
		1800	447/9T	300180T3G447/9T-W40	$24,878	N1B	2127	1.15	324	95.8	48.317	460	
		1200	447/9T	300120T3G447/9T-W40	$29,853	N1B	2809	1.15	366	95.4	48.317	460	37
350	260	3600	447/9TS	350360T3G447/9TS-W40	$25,055	N1B	2108	1.15	384	95.4	42.959	460	37
		1800	447/9TS	350180T3G447/9TS-W40	$25,174	N1B	2244	1.15	396	95.8	42.959	460	
		1800	447/9T	350180T3G447/9T-W40	$25,174	N1B	2319	1.15	396	95.8	48.317	460	
400	300	3600	447/9TS	400360T3G447/9TS-W40	$26,678	N1B	2189	1.15	442	95.8	42.959	460	37
		1800	447/9TS	400180T3G447/9TS-W40	$28,311	N1B	2454	1.15	452	95.8	42.959	460	
		1800	447/9T	400180T3G447/9T-W40	$28,311	N1B	2509	1.15	452	95.8	48.317	460	
450	330	3600	447/9TS	450360T3G447/9TS-W40	$28,239	N1B	2294	1.15	478	96.2	42.959	460	37
500	370	3600	447/9TS	500360T3G447/9TS-W40	$31,476	N1B	2377	1.15	536	96.2	42.959	460	37
550	400	3600	447/9TS	550360T3G447/9TS-W40	$32,629	N1B	2452	1.15	580	96.2	42.959	460	37
600	440	3600	447/9TS	600360T3G447/9TS-W40	$32,994	N1B	2540	1.15	638	96.2	42.959	460	37
700	515	3600	5010/11S	700360T3Q5010S-W40	$42,603	N1B	3684	1.15	764	96.2	56.000	460	37,43,51
800	595	3600	5010/11S	800360T3Q5010S-W40	$45,039	N1B	3528	1.15	885	96.2	56.000	460	37,43,51

Please refer to inside back cover for description of "NOTES"

For detailed specifications, data sheets, drawings and performance curves visit http://www.weg.net

ODP - C-Face - Foot Mount

HP	kW	RPM	Frame	Catalog Number	List Price	Mult. Symbol	Approx. Shipping Weight (lbs)	Service Factor	FL Amps @ High	FL. Eff (%)	"C" Dimension (in)	Voltage (V)	Notes
0.25	0.18	3600	56C	.25360T3E56C-S	$259	F2B	19	1.35	0.46	65.6	10.315	230/460	9
		1800	56C	.25180T3E56C-S	$263	F2B	19	1.35	0.53	69.5	9.921	230/460	9
		1200	56C	.25120T3E56C-S	$316	F2B	21	1.35	0.55	67.5	10.315	230/460	9;51
0.33	0.25	3600	56C	.33360T3E56C-S	$270	F2B	19	1.35	0.61	69.5	10.315	230/460	9
		1800	56C	.33180T3E56C-S	$284	F2B	20	1.35	0.67	73.4	10.315	230/460	9
		1200	56C	.33120T3E56C-S	$361	F2B	22	1.35	0.70	71.4	10.315	230/460	9
0.5	0.37	3600	56C	.50360T3E56C-S	$286	F2B	20	1.25	0.81	73.4	10.315	230/460	9
		1800	56C	.50180T3E56C-S	$324	F2B	24	1.25	0.86	78.2	10.709	230/460	9
		1200	56C	.50120T3E56C-S	$377	F2B	25	1.25	0.93	75.3	10.709	230/460	9
0.75	0.55	3600	56C	.75360T3E56C-S	$333	F2B	22	1.25	1.14	76.8	10.709	230/460	9
		1800	56C	.75180T3E56C-S	$358	F2B	27	1.25	1.15	81.1	11.102	230/460	9
		1800	56C	.75180T3H56C-S	$358	F2B	27	1.25	0.92	81.1	11.102	575	9
		1200	56HC	.75120T3E56C-S	$412	F2B	38	1.15	1.26	81.7	12.677	230/460	9
1	0.75	3600	56C	00136OT3E56C-S	$383	F2B	23	1.25	1.51	77.0	10.709	230/460	9
		1800	56C	00118OT3E56C-S	$378	F2B	30	1.15	1.57	83.5	11.495	230/460	9
		1800	143/5TC	00118OT3E143TC-S	$424	N1S	38	1.15	1.50	85.5	11.181	230/460	9
		1800	143/5TC	00118OT3H143TC-S	$424	N1S	38	1.15	1.20	85.5	11.181	575	9
		1800	143/5TC	00118OT3P143TC-S	$424	N1S	38	1.15	3.50	85.5	11.181	200	9
		1200	56HC	00112OT3E56C-S	$486	F2B	42	1.15	1.68	82.5	13.070	230/460	9
1.5	1.1	3600	56C	00156OT3E56C-S	$408	F2B	30	1.15	1.85	84.0	11.889	230/460	9
		3600	143/5TC	00156OT3E143TC-S	$476	N1S	33	1.15	1.90	84.0	11.181	230/460	9
		3600	143/5TC	00156OT3H143TC-S	$476	N1S	33	1.15	1.50	84.0	11.181	575	9
		1800	56HC	00158OT3E56C-S	$389	F2B	40	1.15	2.10	86.5	12.677	230/460	9
		1800	143/5TC	00158OT3E145TC-S	$483	N1S	45	1.15	2.10	86.5	12.362	230/460	9
		1800	143/5TC	00158OT3H145TC-S	$483	N1S	45	1.15	1.70	86.5	12.362	575	9
		1800	143/5TC	00158OT3P145TC-S	$483	N1S	45	1.15	4.80	86.5	12.362	200	9
2	1.5	3600	56HC	00236OT3E56C-S	$464	F2B	38	1.15	2.42	85.5	12.677	230/460	9
		3600	143/5TC	00236OT3E145TC-S	$521	N1S	40	1.15	2.40	85.5	11.969	230/460	9
		3600	143/5TC	00236OT3H145TC-S	$521	N1S	40	1.15	1.90	85.5	11.969	575	9;51
		1800	56HC	00218OT3E56C-S	$399	F2B	40	1.15	2.69	86.5	12.677	230/460	9
		1800	143/5TC	00218OT3E145TC-S	$526	N1S	43	1.15	2.70	86.5	12.362	230/460	9
		1800	143/5TC	00218OT3H145TC-S	$526	N1S	43	1.15	2.20	86.5	12.362	575	9
		1800	143/5TC	00218OT3V145TC-S	$526	N1S	43	1.15	3.10	86.5	12.362	200/400	9
		1200	182/4TC	00212OT3E184TC-S	$635	N1S	73	1.15	3.00	87.5	14.764	230/460	9
		1200	182/4TC	00212OT3H184TC-S	$635	N1S	73	1.15	2.40	87.5	14.764	575	9
3	2.2	3600	56HC	00336OT3E56C-S	$513	F2B	42	1.15	3.59	85.5	13.070	230/460	9
		3600	143/5TC	00336OT3E145TC-S	$579	N1S	43	1.15	3.60	85.5	12.362	230/460	9
		3600	143/5TC	00336OT3H145TC-S	$579	N1S	43	1.15	2.90	85.5	12.362	575	9
		3600	143/5TC	00336OT3V145TC-S	$579	N1S	43	1.15	4.10	85.5	12.362	200/400	9
		1800	182/4TC	00318OT3E182TC-S	$562	N1S	73	1.15	3.90	89.5	15.157	230/460	9
		1800	182/4TC	00318OT3H182TC-S	$562	N1S	82	1.15	3.10	89.5	15.157	575	9
		1800	182/4TC	00318OT3V182TC-S	$562	N1S	82	1.15	4.40	89.5	15.157	200/400	9
		1200	213/5TC	00312OT3E213TC-S	$826	N1S	113	1.15	4.20	88.5	16.575	230/460	9
		1200	213/5TC	00312OT3H213TC-S	$826	N1S	113	1.15	3.30	88.5	16.575	575	9

continued on next page

Please refer to inside back cover for description of "NOTES"

For detailed specifications, data sheets, drawings and performance curves visit http://www.weg.net

Data subject to change without notice.

ODP - C-Face - Foot Mount - *continued*

HP	kW	RPM	Frame	Catalog Number	List Price	Mult. Symbol	Approx. Shipping Weight (lbs)	Service Factor	FL Amps @ High	FL. Eff (%)	"C" Dimension (in)	Voltage (V)	Notes
5	3.7	3600	182/4TC	005360T3E182TC-S	$689	N1S	69	1.15	6.10	86.5	13.977	230/460	9
		3600	182/4TC	005360T3H182TC-S	$689	N1S	69	1.15	4.90	86.5	13.977	575	9
		3600	182/4TC	005360T3V182TC-S	$689	N1S	61	1.15	7.00	86.5	13.977	200/400	9
		1800	182/4TC	005180T3E184TC-S	$668	N1S	88	1.15	6.30	89.5	16.339	230/460	9
		1800	182/4TC	005180T3H184TC-S	$668	N1S	97	1.15	5.10	89.5	16.339	575	9
		1800	182/4TC	005180T3V184TC-S	$668	N1S	97	1.15	7.30	89.5	16.339	200/400	9
		1200	213/5TC	005120T3E215TC-S	$1,108	N1S	135	1.15	6.70	89.5	16.969	230/460	9
		1200	213/5TC	005120T3H215TC-S	$1,108	N1S	135	1.15	5.40	89.5	16.969	575	9
7.5	5.5	3600	182/4TC	007360T3E184TC-S	$958	N1S	79	1.15	8.70	88.5	14.764	230/460	9
		3600	182/4TC	007360T3H184TC-S	$958	N1S	79	1.15	6.90	88.5	14.764	575	9
		1800	213/5TC	007180T3E213TC-S	$961	N1S	125	1.15	9.30	91.0	16.575	230/460	9
		1800	213/5TC	007180T3H213TC-S	$961	N1S	125	1.15	7.40	91.0	16.575	575	9
		1800	213/5TC	007180T3V213TC-S	$961	N1S	125	1.15	10.6	91.0	16.575	200/400	9
		1200	254/6TC	007120T3E254TC-S	$1,535	N1S	209	1.15	10.2	90.2	20.472	230/460	9
		1200	254/6TC	007120T3H254TC-S	$1,535	N1S	209	1.15	8.20	90.2	20.472	575	9
		1200	254TC	007120T3E254TC-W40	$1,535	N1B	247	1.25	9.94	90.2	21.037	230/460	
		1200	254TC	007120T3H254TC-W40	$1,535	N1B	255	1.25	7.95	90.2	21.037	575	
10	7.5	3600	213/5TC	010360T3E213TC-S	$1,132	N1S	126	1.15	12.0	89.5	16.575	230/460	9
		3600	213/5TC	010360T3H213TC-S	$1,132	N1S	125	1.15	9.60	89.5	16.575	575	9
		3600	213/5TC	010360T3V213TC-S	$1,132	N1S	126	1.15	13.8	89.5	16.969	200/400	9
		1800	213/5TC	010180T3E215TC-S	$1,153	N1S	130	1.15	12.4	91.7	16.575	230/460	9
		1800	213/5TC	010180T3H215TC-S	$1,153	N1S	130	1.15	9.90	91.7	16.575	575	9
		1800	213/5TC	010180T3V215TC-S	$1,153	N1S	130	1.15	14.3	91.7	16.575	200/400	9
		1200	254/6TC	010120T3E256TC-S	$1,785	N1S	237	1.15	13.9	91.7	20.472	230/460	9
		1200	254/6TC	010120T3H256TC-S	$1,785	N1S	237	1.15	11.1	91.7	20.472	575	9
		1200	254/6TC	010120T3E256TC-W40	$1,785	N1B	282	1.25	12.8	91.7	22.785	230/460	
		1200	254/6TC	010120T3H256TC-W40	$1,785	N1B	276	1.25	10.2	91.7	22.785	575	
15	11	3600	213/5TC	015360T3E215TC-S	$1,543	N1S	141	1.15	17.2	90.2	17.756	230/460	9
		3600	213/5TC	015360T3H215TC-S	$1,543	N1S	141	1.15	13.8	90.2	17.756	575	9
		3600	213/5TC	015360T3V215TC-S	$1,543	N1S	141	1.15	19.8	90.2	17.756	200/400	9
		1800	254/6TC	015180T3E254TC-S	$1,545	N1S	211	1.15	18.6	93.0	20.472	230/460	9
		1800	254/6TC	015180T3H254TC-S	$1,545	N1S	211	1.15	14.9	93.0	20.472	575	9
		1800	254/6TC	015180T3V254TC-S	$1,545	N1S	211	1.15	21.4	93.0	20.472	200/400	9
		1800	254TC	015180T3E254TC-W40	$1,545	N1B	290	1.25	17.5	93.0	21.037	230/460	
		1800	254TC	015180T3H254TC-W40	$1,545	N1B	289	1.25	14.0	93.0	21.037	575	
		1800	254TC	015180T3V254TC-W40	$1,545	N1B	264	1.25	20.1	93.0	21.037	200/400	
		1200	284TC	015120T3E284TC-W40	$2,497	N1B	346	1.25	18.4	91.7	23.158	230/460	
		1200	284TC	015120T3H284TC-W40	$2,497	N1B	346	1.25	14.0	93.0	23.158	575	

continued on next page

Please refer to inside back cover for description of "NOTES"

For detailed specifications, data sheets, drawings and performance curves visit http://www.weg.net

ODP - C-Face - Foot Mount - *continued*

HP	kW	RPM	Frame	Catalog Number	List Price	Mult. Symbol	Approx. Shipping Weight (lbs)	Service Factor	FL Amps @ High	FL. Eff (%)	"C" Dimension (in)	Voltage (V)	Notes
20	15	3600	254/6TC	02036OT3E254TC-S	$1,828	N1S	187	1.15	23.8	91.0	20.472	230/460	9
		3600	254/6TC	02036OT3H254TC-S	$1,828	N1S	187	1.15	19.0	91.0	20.472	575	9
		3600	254TC	02036OT3E254TC-W40	$1,828	N1B	221	1.25	24.3	91.0	21.037	230/460	
		3600	254TC	02036OT3H254TC-W40	$1,828	N1B	221	1.25	19.4	91.0	21.037	575	
		1800	254/6TC	02018OT3E256TC-S	$1,900	N1S	235	1.15	25.0	93.0	20.472	230/460	9
		1800	254/6TC	02018OT3H256TC-S	$1,900	N1S	235	1.15	20.0	93.0	20.472	575	9
		1800	254/6TC	02018OT3V256TC-S	$1,900	N1S	235	1.15	28.8	93.0	20.472	200/400	9
		1800	254/6TC	02018OT3E256TC-W40	$1,900	N1B	326	1.25	24.1	93.0	22.785	230/460	
		1800	254/6TC	02018OT3H256TC-W40	$1,900	N1B	300	1.25	19.3	93.0	22.785	575	
		1800	254/6TC	02018OT3V256TC-W40	$1,900	N1B	301	1.25	27.7	93.0	22.785	200/400	
		1200	284/6TC	02012OT3E286TC-W40	$3,119	N1B	422	1.25	24.3	92.4	24.658	230/460	
		1200	284/6TC	02012OT3H286TC-W40	$3,119	N1B	421	1.25	19.4	92.4	24.658	575	
25	18.5	3600	254/6TC	02536OT3E256TC-S	$2,207	N1S	202	1.15	29.1	91.7	20.472	230/460	9
		3600	254/6TC	02536OT3H256TC-S	$2,207	N1S	202	1.15	23.3	91.7	20.472	575	9
		3600	254/6TC	02536OT3E256TC-W40	$2,207	N1B	266	1.25	28.8	91.7	22.785	230/460	
		3600	254/6TC	02536OT3H256TC-W40	$2,207	N1B	262	1.25	23.0	91.7	22.785	575	
		1800	284TC	02518OT3E284TC-W40	$2,245	N1B	388	1.25	29.5	93.6	23.158	230/460	
		1800	284TC	02518OT3H284TC-W40	$2,245	N1B	387	1.25	23.6	93.6	23.158	575	
		1800	284TC	02518OT3V284TC-W40	$2,245	N1B	387	1.25	33.9	93.6	23.158	200/400	
		1200	324TC	02512OT3E324TC-W40	$3,619	N1B	501	1.25	30.8	93.0	25.807	230/460	
30	22	3600	284TSC	03036OT3E284TSC-W40	$2,572	N1B	339	1.25	35.0	91.7	21.783	230/460	
		3600	284TSC	03036OT3H284TSC-W40	$2,572	N1B	338	1.25	28.0	91.7	21.783	575	
		3600	284TSC	03036OT3V284TSC-W40	$2,572	N1B	340	1.25	40.3	91.7	21.783	200/400	
		1800	284/6TC	03018OT3E286TC-W40	$2,615	N1B	434	1.25	34.9	94.1	24.658	230/460	
		1800	284/6TC	03018OT3H286TC-W40	$2,615	N1B	434	1.25	27.9	94.1	24.658	575	
		1800	284/6TC	03018OT3V286TC-W40	$2,615	N1B	434	1.25	40.1	94.1	24.658	200/400	
		1200	324/6TC	03012OT3E326TC-W40	$3,990	N1B	564	1.25	36.0	93.6	27.307	230/460	
40	30	3600	284/6TSC	04036OT3E286TSC-W40	$3,393	N1B	383	1.25	46.8	92.4	23.283	230/460	
		3600	284/6TSC	04036OT3H286TSC-W40	$3,393	N1B	396	1.25	37.4	92.4	23.283	575	
		1800	324TSC	04018OT3E324TSC-W40	$3,195	N1B	573	1.25	47.6	94.1	24.307	230/460	
		1800	324TC	04018OT3E324TC-W40	$3,195	N1B	497	1.25	47.6	94.1	25.807	230/460	
		1800	324TC	04018OT3H324TC-W40	$3,195	N1B	489	1.25	38.1	94.1	25.807	575	
		1200	364/5TC	04012OT3E364TC-W40	$5,938	N1B	881	1.25	47.1	94.1	29.725	230/460	
50	37	3600	324TSC	05036OT3H324TSC*	$3,920	N1B	521	1.15	47.3	93.0	24.685	575	
		3600	324TSC	05036OT3E324TSC-W40	$3,920	N1B	474	1.25	58.7	93.0	24.307	230/460	
		3600	324TSC	05036OT3H324TSC-W40	$3,920	N1B	471	1.25	47.0	93.0	24.307	575	
		1800	324/6TSC	05018OT3E326TSC-W40	$3,888	N1B	557	1.25	58.5	94.5	25.807	230/460	
		1800	324/6TC	05018OT3E326TC-W40	$3,888	N1B	560	1.25	58.5	94.5	27.307	230/460	
		1800	324/6TC	05018OT3H326TC-W40	$3,888	N1B	551	1.25	46.8	94.5	27.307	575	
		1200	364/5TC	05012OT3E365TC-W40	$6,786	N1B	912	1.25	58.1	94.1	29.725	230/460	
60	45	3600	324/6TSC	06036OT3E326TSC-W40	$4,681	N1B	520	1.25	71.0	93.6	25.807	230/460	
		1800	364/5TC	06018OT3E364TC-W40	$4,837	N1B	881	1.25	69.9	95.0	29.725	230/460	
		1800	364/5TC	06018OT3H364TC-W40	$4,837	N1B	878	1.25	55.9	95.0	29.725	575	

continued on next page

Please refer to inside back cover for description of "NOTES"

For detailed specifications, data sheets, drawings and performance curves visit http://www.weg.net

Data subject to change without notice.

ODP - C-Face - Foot Mount - *continued*

HP	kW	RPM	Frame	Catalog Number	List Price	Mult. Symbol	Approx. Shipping Weight (lbs)	Service Factor	FL Amps @ High	FL. Eff (%)	"C" Dimension (in)	Voltage (V)	Notes
75	55	3600	364/5TSC	07536OT3E364TSC-W40	$6,193	N1B	816	1.25	84.8	93.6	27.600	230/460	
		1800	364/5TC	07518OT3E365TC-W40	$6,052	N1B	905	1.25	85.5	95.0	29.725	230/460	
		1800	364/5TC	07518OT3H365TC-W40	$6,052	N1B	902	1.25	68.4	95.0	29.725	575	
100	75	1800	404/5TSC	10018OT3E404TSC-W40	$7,587	N1B	1074	1.25	115	95.4	31.100	230/460	
		1800	404/5TSC	10018OT3H404TSC-W40	$7,587	N1B	1069	1.25	92.0	95.4	31.100	575	
		1800	404/5TC	10018OT3E404TC-W40	$7,587	N1B	1088	1.25	115	95.4	34.100	230/460	
		1800	404/5TC	10018OT3H404TC-W40	$7,587	N1B	1083	1.25	92.0	95.4	34.100	575	
125	90	1800	404/5TSC	12518OT3E405TSC-W40	$8,427	N1B	1150	1.25	138	95.4	31.100	230/460	
		1800	404/5TSC	12518OT3G405TSC-W40	$8,427	N1B	1145	1.25	138	95.4	31.100	460	
		1800	404/5TC	12518OT3E405TC-W40	$8,427	N1B	1164	1.25	138	95.4	34.100	230/460	
		1800	404/5TC	12518OT3G405TC-W40	$8,427	N1B	1159	1.25	138	95.4	34.100	460	
		1800	404/5TC	12518OT3H405TC-W40	$8,427	N1B	1158	1.25	110	95.4	34.100	575	
150	110	3600	404/5TSC	15036OT3G405TSC-W40	$11,862	N1B	1014	1.25	167	94.1	31.100	460	
		1800	444/5TSC	15018OT3G444TSC-W40	$11,228	N1B	1522	1.25	170	95.8	34.358	460	
		1800	444/5TC	15018OT3G444TC-W40	$11,228	N1B	1583	1.25	170	95.8	38.325	460	
		1800	444/5TC	15018OT3H444TC-W40	$11,228	N1B	1582	1.25	136	95.8	38.325	575	
200	150	3600	444/5TSC	20036OT3G444TSC-W40	$15,064	N1B	1463	1.15	225	95.0	34.358	460	
		1800	444/5TC	20018OT3G445TC-W40	$13,564	N1B	1657	1.15	234	95.8	38.325	460	
250	185	3600	444/5TSC	25036OT3G445TSC-W40	$19,543	N1B	1575	1.15	278	95.0	34.358	460	
		1800	444/5TC	25018OT3G445TC-W40	$16,073	N1B	1733	1.15	289	95.8	38.325	460	

** To be discontinued and replaced by W40 model once inventory is depleted.*

Please refer to inside back cover for description of "NOTES"

For detailed specifications, data sheets, drawings and performance curves visit http://www.weg.net

Three-Phase General Purpose

ODP - C-Face - Footless

HP	kW	RPM	Frame	Catalog Number	List Price	Mult. Symbol	Approx. Shipping Weight (lbs)	Service Factor	FL Amps @ High	FL. Eff (%)	"C" Dimension (in)	Voltage (V)	Notes
0.25	0.18	1800	56C	.25180T3E56CFL-S	$263	F2B	19	1.35	0.53	66.0	9.921	230/460	9,20
		1800	56C	.25180T3H56CFL-S	$263	F2B	19	1.35	0.42	69.5	9.921	575	9,20
0.33	0.25	3600	56C	.33360T3E56CFL-S	$270	F2B	19	1.35	0.61	69.5	10.315	230/460	9,20
		1800	56C	.33180T3E56CFL-S	$284	F2B	20	1.35	0.67	73.4	10.315	230/460	9,20
		1800	56C	.33180T3H56CFL-S	$284	F2B	20	1.35	0.54	73.4	10.315	575	9,20
0.5	0.37	3600	56C	.50360T3E56CFL-S	$286	F2B	20	1.25	0.81	73.4	10.315	230/460	9,20
		1800	56C	.50180T3E56CFL-S	$324	F2B	24	1.25	0.86	78.2	10.709	230/460	9,20
		1800	56C	.50180T3H56CFL-S	$324	F2B	24	1.25	0.69	78.2	10.709	575	9,20
0.75	0.55	3600	56C	.75360T3E56CFL-S	$333	F2B	22	1.25	1.14	76.8	10.709	230/460	9,20
		1800	56C	.75180T3E56CFL-S	$358	F2B	27	1.25	1.15	81.1	11.102	230/460	9,20
		1800	56C	.75180T3H56CFL-S	$358	F2B	27	1.25	0.92	81.1	11.102	575	9,20
1	0.75	3600	56C	001360T3E56CFL-S	$383	F2B	23	1.25	1.51	77.0	10.709	230/460	9,20
		1800	56C	001180T3E56CFL-S	$378	F2B	30	1.15	1.57	83.5	11.495	230/460	9,20
		1800	56C	001180T3H56CFL-S	$378	F2B	30	1.15	1.26	83.5	11.495	575	9,20
		1800	143/5T	001180T3ER143TC-S	$479	N1S	34	1.15	1.51	85.5	12.952	230/460	9,20
1.5	1.1	3600	56C	001560T3E56CFL-S	$408	F2B	30	1.15	1.85	84.0	11.889	230/460	9,20
		3600	143/5T	001560T3ER143TC-S	$531	N1S	29	1.15	1.85	84.0	12.952	230/460	9,20,51
		1800	56C	001580T3E56CFL-S	$389	F2B	40	1.15	2.10	86.5	12.677	230/460	9,20
		1800	56C	001580T3H56CFL-S	$389	F2B	40	1.15	1.68	86.5	12.677	575	9,20
		1800	143/5T	001580T3ER145TC-S	$538	N1S	42	1.15	2.07	86.5	13.739	230/460	9,20
2	1.5	3600	56C	002360T3E56CFL-S	$464	F2B	38	1.15	2.42	85.5	12.677	230/460	9,20
		3600	143/5T	002360T3ER145TC-S	$576	N1S	37	1.15	2.42	85.5	13.346	230/460	9,20
		1800	56C	002180T3E56CFL-S	$399	F2B	40	1.15	2.69	86.5	12.677	230/460	9,20
		1800	56C	002180T3H56CFL-S	$399	F2B	40	1.15	2.15	86.5	12.677	575	9,20
		1800	143/5T	002180T3ER145TC-S	$581	N1S	39	1.15	2.69	86.5	13.739	230/460	9,20
		1200	182/4TC	002120T3ER184TC-S	$635	N1S	73	1.15	3.00	87.5	14.764	230/461	9,20
3	2.2	3600	56C	003360T3E56CFL-S	$513	F2B	42	1.15	3.59	85.5	13.070	230/460	9,20
		3600	143/5T	003360T3ER145TC-S	$634	N1S	40	1.15	3.59	85.5	13.739	230/460	9,20
		1800	182/4T	003180T3ER182TC-S	$620	N1S	66	1.15	3.86	89.5	16.534	230/460	9,20,51
5	3.7	3600	182/4T	005360T3ER182TC-S	$747	N1S	68	1.15	6.10	86.5	15.354	230/460	9,20
		1800	182/4T	005180T3ER184TC-S	$726	N1S	80	1.15	6.33	89.5	17.716	230/460	9,20
7.5	5.5	3600	182/4T	007360T3ER184TC-S	$1,016	N1S	78	1.15	8.67	88.5	16.142	230/460	9,20
		1800	213/5T	007180T3ER213TC-S	$1,043	N1S	116	1.15	9.25	91.0	18.780	230/460	9,20
10	7.5	3600	213/5T	010360T3ER213TC-S	$1,214	N1S	117	1.15	12.0	89.5	18.780	230/460	9,20
		1800	213/5T	010180T3ER215TC-S	$1,235	N1S	137	1.15	12.4	91.7	18.780	230/460	9,20
15	11	3600	213/5T	015360T3ER215TC-S	$1,625	N1S	131	1.15	17.2	90.2	19.961	230/460	9,20
		1800	254/6T	015180T3ER254TC-S	$1,643	N1S	175	1.15	18.6	93.0	22.401	230/460	9,20
20	15	3600	254/6T	020360T3ER254TC-S	$1,926	N1S	151	1.15	23.8	91.0	22.401	230/460	9,20
		1800	254/6T	020180T3ER256TC-S	$1,998	N1S	198	1.15	25.0	93.0	22.401	230/460	9,20

ODP - Resilient Base

HP	kW	RPM	Frame	Catalog Number	List Price	Mult. Symbol	Approx. Shipping Weight (lbs)	Service Factor	FL Amps @ High	FL. Eff (%)	"C" Dimension (in)	Voltage (V)	Notes
0.33	0.25	1800	56	.33180T3ERB56-S	$314	F2B	22	1.35	0.67	73.4	10.827	230/460	9,13
0.5	0.37	1800	56	.50180T3ERB56-S	$354	F2B	25	1.25	0.86	78.2	11.220	230/460	9,13
0.75	0.55	1800	56	.75180T3ERB56-S	$388	F2B	28	1.25	1.15	81.1	11.614	230/460	9,13
1	0.75	1800	56	001180T3ERB56-S	$408	F2B	31	1.15	1.57	83.5	12.008	230/460	9,13
1.5	1.1	1800	56H	001580T3ERB56-S	$419	F2B	42	1.15	2.10	86.5	13.189	230/460	9,13

Data subject to change without notice.

TEFC - Three-Phase - Foot Mount and Foot Mount with C-Face

HP	kW	RPM	Frame	Catalog Number	List Price	Mult. Symbol	Approx. Shipping Weight (lbs)	Service Factor	FL Amps @ High	FL. Eff (%)	"C" Dimension (in)	Voltage (V)	Notes
1	0.75	3600	143/5T	00136ET3E143T-SG	$560	RSP	31	1.15	1.40	78.5	13.189	230/460	9;34
		3600	143/5T	00136ET3H143T-SG	$560	RSP	31	1.15	1.10	78.5	13.189	575	9;34
		3600	143/5T	00136ET3H143T-W22G	$678	N1	44	1.25	1.15	81.5	13.358	575	34
		3600	143/5T	00136ET3E143T-W22G	$678	N1	45	1.25	1.44	81.5	13.358	230/460	34
		1800	143/5T	00118ET3E143T-SG	$599	RSP	42	1.15	1.50	85.5	13.583	230/460	9;34
		1800	143/5T	00118ET3H143T-SG	$599	RSP	42	1.15	1.20	85.5	13.583	575	9;34
		1800	143/5T	00118ET3V143T-SG	$599	RSP	42	1.15	1.70	85.5	13.583	200/400	9;34
		1800	143/5T	00118ET3E143T-W22G	$667	N1	48	1.25	1.47	85.5	13.358	230/460	34
		1800	143/5T	00118ET3E143TC-W22G	$695	N1	50	1.25	1.47	85.5	13.358	230/460	34
		1800	143/5T	00118ET3H143T-W22G	$667	N1	48	1.25	1.18	85.5	13.358	575	34
		1200	143/5T	00112ET3E145T-SG	$669	RSP	43	1.15	1.60	82.5	13.583	230/460	9;34
		1200	143/5T	00112ET3H145T-SG	$669	RSP	43	1.15	1.30	82.5	13.583	575	9;34
		1200	143/5T	00112ET3H145T-W22G	$748	N1	55	1.25	1.38	82.5	13.358	575	34
		1200	143/5T	00112ET3E145T-W22G	$748	N1	55	1.25	1.73	82.5	13.358	230/460	34
1.5	1.1	3600	143/5T	00156ET3E143T-SG	$613	RSP	39	1.15	1.90	84.0	13.189	230/460	9;34
		3600	143/5T	00156ET3H143T-SG	$613	RSP	39	1.15	1.50	84.0	13.189	575	9;34
		3600	143/5T	00156ET3E143T-W22G	$683	N1	49	1.25	1.96	84.0	13.358	230/460	34
		3600	143/5T	00156ET3H143T-W22G	$683	N1	49	1.25	1.57	84.0	13.358	575	34
		1800	143/5T	00158ET3E145T-SG	$620	RSP	43	1.15	2.00	86.5	13.583	230/460	9;34
		1800	143/5T	00158ET3H145T-SG	$620	RSP	43	1.15	1.60	86.5	13.583	575	9;34
		1800	143/5T	00158ET3E145TC-W22G	$719	N1	56	1.25	2.02	86.5	13.358	230/460	34
		1800	143/5T	00158ET3E145T-W22G	$691	N1	53	1.25	2.02	86.5	13.358	230/460	34
		1800	143/5T	00158ET3V145T-SG	$620	RSP	43	1.15	2.30	86.5	13.583	200/400	9;34
		1800	143/5T	00158ET3H145T-W22G	$691	N1	53	1.25	1.62	86.5	13.358	575	34
		1200	182/4T	00152ET3E182T-SG	$826	RSP	76	1.15	2.20	87.5	16.339	230/460	9;34
		1200	182/4T	00152ET3H182T-SG	$826	RSP	76	1.15	1.80	87.5	16.339	575	9;34
		1200	182/4T	00152ET3H182T-W22G	$924	N1	97	1.25	2.03	87.5	15.860	575	34
		1200	182/4T	00152ET3E182T-W22G	$924	N1	97	1.25	2.54	87.5	15.860	230/460	34
2	1.5	3600	143/5T	00236ET3E145T-SG	$654	RSP	45	1.15	2.50	85.5	13.976	230/460	9;34
		3600	143/5T	00236ET3H145T-SG	$654	RSP	45	1.15	2.00	85.5	13.976	575	9;34
		3600	143/5T	00236ET3H145T-W22G	$731	N1	54	1.25	2.05	85.5	13.358	575	34
		3600	143/5T	00236ET3E145T-W22G	$731	N1	54	1.25	2.56	85.5	13.358	230/460	34
		1800	143/5T	00218ET3E145T-SG	$673	RSP	47	1.15	2.70	86.5	13.976	230/460	9;34
		1800	143/5T	00218ET3E145T-W22G	$708	N1	56	1.25	2.61	86.5	13.346	230/460	34
		1800	143/5T	00218ET3H145T-SG	$673	RSP	47	1.15	2.20	86.5	13.976	575	9;34
		1800	143/5T	00218ET3V145T-SG	$673	RSP	47	1.15	3.10	86.5	13.976	200/400	9;34
		1800	143/5T	00218ET3H145T-W22G	$752	N1	54	1.25	2.21	86.5	13.358	575	34
		1800	143/5T	00218ET3E145TC-W22G	$780	N1	53	1.25	2.76	86.5	13.358	230/460	34
		1200	182/4T	00212ET3E184T-SG	$883	RSP	86	1.15	3.00	88.5	17.126	230/460	9;34
		1200	182/4T	00212ET3H184T-SG	$883	RSP	86	1.15	2.40	88.5	17.126	575	9;34
		1200	182/4T	00212ET3H184T-W22G	$989	N1	103	1.25	2.58	88.5	15.860	575	34;39
		1200	182/4T	00212ET3E184T-W22G	$989	N1	108	1.25	3.22	88.5	15.860	230/460	34;39

continued on next page

Three-Phase General Purpose Motors

WITH INTERNAL AEGIS® SGR

TEFC - Three-Phase - Foot Mount and Foot Mount with C-Face - *continued*

HP	kW	RPM	Frame	Catalog Number	List Price	Mult. Symbol	Approx. Shipping Weight (lbs)	Service Factor	FL Amps @ High	FL. Eff (%)	"C" Dimension (in)	Voltage (V)	Notes
3	2.2	3600	182/4T	00336ET3E182T-SG	$835	RSP	63	1.15	3.70	86.5	15.551	230/460	9;34
		3600	182/4T	00336ET3H182T-SG	$835	RSP	63	1.15	3.00	86.5	15.551	575	9;34
		3600	182/4T	00336ET3E182T-W22G	$933	N1	99	1.25	3.63	86.5	15.860	230/460	34
		3600	182/4T	00336ET3H182T-W22G	$933	N1	99	1.25	2.90	86.5	15.860	575	34
		1800	182/4T	00318ET3E182T-SG	$747	RSP	87	1.15	3.80	89.5	17.913	230/460	9;34
		1800	182/4TC	00318ET3E182TC-SG	$780	RSP	87	1.15	3.80	89.5	17.913	230/460	9;34;51
		1800	182/4T	00318ET3H182T-SG	$747	RSP	87	1.15	3.00	89.5	17.913	575	9;34
		1800	182/4T	00318ET3V182T-SG	$747	RSP	87	1.15	4.40	89.5	17.913	200/400	9;34
		1800	182/4T	00318ET3E182T-W22G	$833	N1	92	1.25	3.91	89.5	15.860	230/460	34
		1800	182/4T	00318ET3E182TC-W22G	$870	N1	96	1.25	3.91	89.5	15.860	230/460	34
		1800	182/4T	00318ET3H182T-W22G	$833	N1	94	1.25	3.13	89.5	15.860	575	34
		1200	213/5T	00312ET3E213T-SG	$1,183	RSP	134	1.15	4.20	89.5	19.291	230/460	9;34
		1200	213/5T	00312ET3H213T-SG	$1,183	RSP	134	1.15	3.40	89.5	19.291	575	9;34;51
		1200	213/5T	00312ET3E213T-W22G	$1,329	N1	160	1.25	4.41	89.5	19.517	230/460	34
		1200	213/5T	00312ET3H213T-W22G	$1,329	N1	163	1.25	3.53	89.5	19.517	575	34
5	3.7	3600	182/4T	00536ET3E184T-SG	$930	RSP	83	1.15	5.90	88.5	16.732	230/460	9;34
		3600	182/4TC	00536ET3E184TC-SG	$963	RSP	92	1.15	5.90	88.5	16.732	230/460	9;34;51
		3600	182/4T	00536ET3H184T-SG	$930	RSP	111	1.15	4.70	88.5	17.126	575	9;34
		3600	182/4T	00536ET3E184T-W22G	$1,043	N1	103	1.25	5.90	88.5	15.860	230/460	34
		3600	182/4T	00536ET3H184T-W22G	$1,043	N1	106	1.25	4.72	88.5	15.860	575	34
		1800	182/4T	00518ET3E184T-SG	$842	RSP	81	1.15	6.50	89.5	17.913	230/460	9;34
		1800	182/4TC	00518ET3E184TC-SG	$876	RSP	81	1.15	6.50	89.5	17.913	230/460	9;34;51
		1800	182/4T	00518ET3H184T-SG	$842	RSP	81	1.15	5.20	89.5	17.913	575	9;34
		1800	182/4T	00518ET3V184T-SG	$842	RSP	81	1.15	7.50	89.5	17.913	200/400	9;34
		1800	182/4T	00518ET3E184TC-W22G	$980	N1	107	1.25	6.45	89.5	15.860	230/460	34
		1800	182/4T	00518ET3H184T-W22G	$942	N1	104	1.25	5.16	89.5	15.860	575	34
		1200	213/5T	00512ET3E215T-SG	$1,360	RSP	153	1.15	6.70	89.5	20.079	230/460	9;34
		1200	213/5T	00512ET3H215T-SG	$1,360	RSP	153	1.15	5.40	89.5	20.079	575	9;34
7.5	5.5	3600	213/5T	00736ET3E213T-SRG	$1,298	RSP	143	1.15	8.67	89.5	18.897	230/460	9;34
		3600	213/5T	00736ET3E213T-SG	$1,180	RSP	124	1.15	8.70	89.5	18.897	230/460	9;34
		3600	213/5TC	00736ET3E213TC-SG	$1,225	RSP	134	1.15	8.70	89.5	18.897	230/460	9;34;51
		3600	213/5T	00736ET3H213T-SG	$1,180	RSP	143	1.15	7.00	89.5	18.898	575	9;34
		3600	213/5T	00736ET3E213T-W22G	$1,325	N1	149	1.25	8.76	89.5	19.517	230/460	34
		3600	213/5T	00736ET3H213T-W22G	$1,325	N1	163	1.25	7.01	89.5	19.517	575	34
		1800	213/5T	00718ET3E213T-SG	$1,148	RSP	131	1.15	9.10	91.7	18.898	230/460	9;34
		1800	213/5TC	00718ET3E213TC-SG	$1,194	RSP	140	1.15	9.10	91.7	18.898	230/460	9;34;51
		1800	213/5T	00718ET3H213T-SG	$1,148	RSP	131	1.15	7.30	91.7	18.898	575	9;34
		1800	213/5T	00718ET3V213T-SG	$1,148	RSP	131	1.15	10.5	91.7	18.898	200/400	9;34
		1800	213/5T	00718ET3E213TC-W22G	$1,341	N1	174	1.25	9.18	91.7	19.517	230/460	34
		1800	213/5T	00718ET3E213T-W22G	$1,289	N1	170	1.25	9.18	91.7	19.517	230/460	34
		1800	213/5T	00718ET3H213T-W22G	$1,289	N1	174	1.25	7.34	91.7	19.517	575	34
		1200	254/6T	00712ET3E254T-SG	$2,079	RSP	232	1.15	10.0	91.0	22.559	230/460	9;34
		1200	254/6T	00712ET3H254T-SG	$2,079	RSP	232	1.15	8.00	91.0	22.559	575	9;34
		1200	254/6T	00712ET3E254T-W22G	$2,345	N1	300	1.25	9.48	91.0	24.945	230/460	34
		1200	254/6T	00712ET3H254T-W22G	$2,345	N1	316	1.25	7.58	91.0	24.945	575	34

continued on next page

Please refer to inside back cover for description of "NOTES"

For detailed specifications, data sheets, drawings and performance curves visit http://www.weg.net

Data subject to change without notice.

TEFC - Three-Phase - Foot Mount and Foot Mount with C-Face - *continued*

HP	kW	RPM	Frame	Catalog Number	List Price	Mult. Symbol	Approx. Shipping Weight (lbs)	Service Factor	FL Amps @ High	FL. Eff (%)	"C" Dimension (in)	Voltage (V)	Notes
10	7.5	3600	213/5T	01036ET3E215T-SRG	$1,496	RSP	178	1.15	11.5	90.2	19.291	230/460	9;34
		3600	213/5T	01036ET3E215T-SG	$1,360	RSP	157	1.15	11.5	90.2	20.079	230/460	9;34
		3600	213/5T	01036ET3E215T-W22G	$1,532	N1	172	1.25	11.6	90.2	19.517	230/460	34
		3600	213/5T	01036ET3H215T-W22G	$1,532	N1	180	1.25	9.28	90.2	19.517	575	34
		3600	213/5TC	01036ET3E215TC-SG	$1,405	RSP	178	1.15	11.5	90.2	21.654	230/460	9;34;51
		3600	213/5T	01036ET3H215T-SG	$1,360	RSP	156	1.15	9.20	90.2	20.079	575	9;34
		1800	213/5T	01018ET3E215T-SG	$1,310	RSP	141	1.15	12.2	91.7	19.291	230/460	9;34
		1800	213/5TC	01018ET3E215TC-SG	$1,354	RSP	151	1.15	12.2	91.7	19.291	230/460	9;34;51
		1800	213/5T	01018ET3H215T-SG	$1,310	RSP	141	1.15	9.80	91.7	19.291	575	9;34
		1800	213/5T	01018ET3V215T-SG	$1,310	RSP	141	1.15	14.0	91.7	19.291	200/400	9;34
		1800	213/5T	01018ET3E215TC-W22G	$1,525	N1	183	1.25	12.4	91.7	19.517	230/460	34
		1800	213/5T	01018ET3H215T-W22G	$1,473	N1	188	1.25	9.92	91.7	19.517	575	34
		1200	254/6T	01012ET3E256T-SG	$2,368	RSP	263	1.15	13.8	91.0	23.346	230/460	9;34
		1200	254/6T	01012ET3H256T-SG	$2,368	RSP	263	1.15	11.0	91.0	23.346	575	9;34
		1200	254/6T	01012ET3E256T-W22G	$2,676	N1	318	1.25	12.9	91.0	24.945	230/460	34
		1200	254/6T	01012ET3H256T-W22G	$2,676	N1	325	1.25	10.3	91.0	24.945	575	34
15	11	3600	254/6T	01536ET3E254T-SG	$1,869	RSP	216	1.15	17.4	91.0	22.559	230/460	9;34
		3600	254/6TC	01536ET3E254TC-SG	$1,929	RSP	216	1.15	17.4	91.0	22.559	230/460	9;34;51
		3600	254/6T	01536ET3H254T-SG	$1,869	RSP	216	1.15	13.9	91.0	22.559	575	9;34
		3600	254/6T	01536ET3E254T-W22G	$2,104	N1	300	1.25	17.2	91.0	24.945	230/460	9;34
		3600	254/6T	01536ET3H254T-W22G	$2,104	N1	298	1.25	13.8	91.0	24.945	575	34
		1800	254/6T	01518ET3E254T-SG	$1,890	RSP	234	1.15	18.2	92.4	22.559	230/460	9;34
		1800	254/6TC	01518ET3E254TC-SG	$1,950	RSP	248	1.15	18.2	92.4	22.559	230/460	9;34
		1800	254/6T	01518ET3H254T-SG	$1,890	RSP	234	1.15	14.6	92.4	22.559	575	34
		1800	254/6T	01518ET3V254T-SG	$1,890	RSP	234	1.15	20.9	92.4	22.559	200/400	34
		1800	254/6T	01518ET3E254TC-W22G	$2,197	N1	340	1.25	18.00	92.4	24.945	230/460	34
		1800	254/6T	01518ET3E254T-W22G	$2,128	N1	349	1.25	18.0	92.4	24.961	230/460	9;34;51
		1800	254/6T	01518ET3H254T-W22G	$2,128	N1	347	1.25	14.4	92.4	24.945	575	34
		1200	284/6TS	01512ET3E284TS-W22G	$3,601	N1	360	1.25	17.9	91.7	26.557	230/460	34
		1200	284/6T	01512ET3E284T-W22G	$3,601	N1	422	1.25	17.9	91.7	27.929	230/460	9;34
		1200	284/6TS	01512ET3H284TS-W22G	$3,601	N1	360	1.25	14.3	91.7	26.557	575	9;34;51
		1200	284/6T	01512ET3H284T-W22G	$3,601	N1	420	1.25	14.3	91.7	27.929	575	34
20	15	3600	254/6T	02036ET3E256T-SG	$2,356	RSP	242	1.15	22.7	91.0	23.346	230/460	9;34
		3600	254/6TC	02036ET3E256TC-SG	$2,416	RSP	245	1.15	22.7	91.0	23.346	230/460	9;34
		3600	254/6T	02036ET3H256T-SG	$2,356	RSP	242	1.15	18.2	91.0	23.346	575	9;34;51
		3600	254/6T	02036ET3E256T-W22G	$2,662	N1	325	1.25	23.2	91.0	24.961	230/460	9;34
		3600	254/6T	02036ET3H256T-W22G	$2,662	N1	323	1.25	18.6	91.0	24.945	575	34
		1800	254/6T	02018ET3E256T-SG	$2,198	RSP	265	1.15	24.7	92.4	23.346	230/460	9;34;51
		1800	254/6TC	02018ET3E256TC-SG	$2,258	RSP	279	1.15	24.7	93.0	23.346	230/460	34
		1800	254/6T	02018ET3H256T-SG	$2,198	RSP	265	1.15	19.8	93.0	23.346	575	34
		1800	254/6T	02018ET3V256T-SG	$2,198	RSP	265	1.15	28.4	93.0	23.346	200/400	34
		1800	254/6T	02018ET3E256T-W22G	$2,481	N1	386	1.25	24.1	93.0	24.945	230/460	34
		1800	254/6T	02018ET3E256TC-W22G	$2,550	N1	389	1.25	24.1	93.0	24.945	230/460	34
		1800	254/6T	02018ET3H256T-W22G	$2,481	N1	396	1.25	19.3	93.0	24.945	575	34
		1200	284/6T	02012ET3E286T-W22G	$4,272	N1	449	1.25	24.2	91.7	27.929	230/460	34
		1200	284/6T	02012ET3H286T-W22G	$4,272	N1	450	1.25	19.4	91.7	27.929	575	34

continued on next page

Please refer to inside back cover for description of "NOTES"

For detailed specifications, data sheets, drawings and performance curves visit http://www.weg.net

Three-Phase General Purpose Motors

WITH INTERNAL AEGIS® SGR

TEFC - Three-Phase - Foot Mount and Foot Mount with C-Face - *continued*

HP	kW	RPM	Frame	Catalog Number	List Price	Mult. Symbol	Approx. Shipping Weight (lbs)	Service Factor	FL Amps @ High	FL. Eff (%)	"C" Dimension (in)	Voltage (V)	Notes
25	18.5	3600	284/6TS	02536ET3E284TS-W22G	$3,308	N1	406	1.25	28.5	91.7	26.557	230/460	34
		3600	284/6TS	02536ET3H284TS-W22G	$3,308	N1	400	1.25	22.8	91.7	26.557	575	34
		3600	284/6TSC	02536ET3E284TSC-W22G	$3,407	N1	410	1.25	29.1	91.7	26.642	230/460	34
		1800	284/6T	02518ET3E284T-W22G	$3,053	N1	440	1.25	29.5	93.6	27.929	230/460	34
		1800	284/6T	02518ET3H284T-W22G	$3,053	N1	439	1.25	23.6	93.6	27.929	575	34
		1800	284/6T	02518ET3V284T-W22G	$3,053	N1	440	1.25	33.9	93.6	27.929	200/400	34
		1800	284/6T	02518ET3E284TC-W22G	$3,151	N1	418	1.25	29.50	93.6	27.929	230/460	34
		1200	324/6T	02512ET3E324T-W22G	$5,137	N1	585	1.25	30.4	93.0	31.116	230/460	34
		1200	324/6T	02512ET3H324T-W22G	$5,137	N1	569	1.25	24.3	93.0	31.116	575	34
30	22	3600	284/6TS	03036ET3E286TS-W22G	$3,871	N1	425	1.25	33.8	91.7	26.557	230/460	34
		3600	284/6TS	03036ET3H286TS-W22G	$3,871	N1	430	1.25	27.0	91.7	26.557	575	34
		3600	284/6TSC	03036ET3E286TSC-W22G	$3,969	N1	430	1.25	34.2	91.7	26.642	230/460	34
		1800	284/6T	03018ET3E286T-W22G	$3,533	N1	478	1.25	35.1	93.6	27.929	230/460	34
		1800	284/6TC	03018ET3E286TC-W22G	$3,632	N1	486	1.25	35.1	93.6	27.929	230/460	34
		1800	284/6T	03018ET3H286T-W22G	$3,533	N1	476	1.25	28.1	93.6	27.929	575	34
		1800	284/6T	03018ET3V286T-W22G	$3,533	N1	479	1.25	40.4	93.6	27.929	200/400	34
		1200	324/6T	03012ET3E326T-W22G	$5,673	N1	629	1.25	36.2	93.0	31.116	230/460	34
		1200	324/6TC	03012ET3E326TC-W22G	$5,794	N1	621	1.25	36.2	93.0	31.116	230/460	34,51
		1200	324/6T	03012ET3H326T-W22G	$5,673	N1	621	1.25	29.0	93.0	31.116	575	34
40	30	3600	324/6TS	04036ET3E324TS-W22G	$5,125	N1	590	1.25	45.8	92.4	29.616	230/460	34
		3600	324/6TS	04036ET3H324TS-W22G	$5,125	N1	572	1.25	36.6	92.4	29.616	575	34
		1800	324/6T	04018ET3E324T-W22G	$4,578	N1	615	1.25	47.1	94.1	31.116	230/460	34
		1800	324/6T	04018ET3H324T-W22G	$4,578	N1	614	1.25	37.7	94.1	31.116	575	34
		1800	324/6T	04018ET3V324T-W22G	$4,578	N1	616	1.25	54.2	94.1	31.116	200/400	34
		1800	324/6T	04018ET3E324TC-W22G	$4,700	N1	606	1.25	47.10	94.1	31.116	230/460	34
		1200	364/5T	04012ET3E364T-W22G	$8,124	N1	1004	1.25	46.5	94.1	34.251	230/460	34
		1200	364/5T	04012ET3H364T-W22G	$8,124	N1	950	1.25	37.2	94.1	34.251	575	34
50	37	3600	324/6TS	05036ET3E326TS-W22G	$5,716	N1	612	1.25	56.1	93.0	29.616	230/460	34
		3600	324/6TS	05036ET3H326TS-W22G	$5,716	N1	605	1.25	44.9	93.0	29.616	575	34
		1800	324/6T	05018ET3E326T-W22G	$5,500	N1	638	1.25	59.2	94.5	31.116	230/460	34
		1800	324/6T	05018ET3H326T-W22G	$5,500	N1	634	1.25	47.4	94.5	31.116	575	34
		1800	324/6T	05018ET3V326T-W22G	$5,500	N1	637	1.25	68.1	94.5	31.116	200/400	34,51
		1200	364/5T	05012ET3E365T-W22G	$9,358	N1	1021	1.25	57.4	94.1	34.251	230/460	34
		1200	364/5T	05012ET3H365T-W22G	$9,358	N1	1009	1.25	45.9	94.1	34.251	575	34
60	45	3600	364/5TS	06036ET3E364TS-W22G	$8,392	N1	962	1.25	67.0	93.6	32.338	230/460	34
		3600	364/5TS	06036ET3H364TS-W22G	$8,392	N1	954	1.25	53.6	93.6	32.338	575	34,51
		1800	364/5T	06018ET3E364T-W22G	$8,229	N1	1029	1.25	68.3	95.0	34.251	230/460	34
		1800	364/5T	06018ET3H364T-W22G	$8,229	N1	1027	1.25	54.6	95.0	34.251	575	34
		1200	404/5T	06012ET3E404T-W22G	$11,697	N1	1213	1.25	69.5	94.5	39.730	230/460	34
		1200	404/5T	06012ET3H404T-W22G	$11,697	N1	1213	1.25	55.6	94.5	39.730	575	34
75	55	3600	364/5TS	07536ET3E365TS-W22G	$9,931	N1	965	1.25	81.9	93.6	32.338	230/460	34
		3600	364/5TS	07536ET3H365TS-W22G	$9,931	N1	967	1.25	65.5	93.6	32.338	575	34,51
		1800	364/5T	07518ET3E365T-W22G	$9,545	N1	1046	1.25	84.1	95.4	34.251	230/460	34
		1800	364/5TC	07518ET3E365TC-W22G	$9,988	N1	1041	1.25	84.1	95.4	34.251	230/460	34,51
		1800	364/5T	07518ET3H365T-W22G	$9,545	N1	1044	1.25	67.3	95.4	34.251	575	34
		1200	404/5T	07512ET3E405T-W22G	$13,258	N1	882	1.25	84.9	94.5	39.730	230/460	34
		1200	404/5T	07512ET3H405T-W22G	$13,258	N1	882	1.25	67.9	94.5	39.730	575	34

continued on next page

Data subject to change without notice.

TEFC - Three-Phase - Foot Mount and Foot Mount with C-Face - *continued*

HP	kW	RPM	Frame	Catalog Number	List Price	Mult. Symbol	Approx. Shipping Weight (lbs)	Service Factor	FL Amps @ High	FL. Eff (%)	"C" Dimension (in)	Voltage (V)	Notes
100	75	3600	404/5TS	10036ET3E405TS-W22G	$13,202	N1	1193	1.25	110	94.1	36.732	230/460	34
		1800	404/5T	10018ET3E405T-W22G	$12,889	N1	1283	1.25	111	95.4	39.730	230/460	34
		1800	404/5T	10018ET3H405T-W22G	$12,889	N1	1292	1.25	88.8	95.4	39.730	575	34
		1200	444/5T	10012ET3E444T-W22G	$17,181	N1	1885	1.25	121	95.0	45.157	230/460	34
		1200	444/5T	10012ET3H444T-W22G	$17,181	N1	1885	1.25	96.8	95.0	45.157	575	34
125	90	3600	444/5TS	12536ET3E444TS-W22G	$16,900	N1	1836	1.15	134	95.0	41.407	230/460	34
		3600	444/5TS	12536ET3H444TS-W22G	$16,900	N1	1836	1.15	107	95.0	41.407	575	34
		1800	444/5T	12518ET3E444T-W22G	$16,298	N1	1824	1.15	139	95.4	45.157	230/460	34
		1800	444/5TC	12518ET3E444TC-W22G	$16,904	N1	1861	1.15	139	95.4	45.157	230/460	34
		1800	444/5T	12518ET3H444T-W22G	$16,298	N1	1824	1.15	111	95.4	45.157	575	34
		1800	444/5TC	12518ET3G444TC-W22G	$17,768	N1	1754	1.15	139	95.4	45.157	460	34,51
		1200	444/5T	12512ET3E445T-W22G	$19,497	N1	2004	1.15	143	95.0	45.157	230/460	34
		1200	444/5T	12512ET3H445T-W22G	$19,497	N1	2004	1.15	114	95.0	45.157	575	34
150	110	1800	444/5TC	15018ET3E445TC-W22G	$19,575	N1	1960	1.15	170	95.8	45.157	230/460	34
		1800	444/5TC	15018ET3G445TC-W22G	$19,575	N1	1960	1.15	170	95.8	45.157	460	34,51

Please refer to inside back cover for description of "NOTES"

For detailed specifications, data sheets, drawings and performance curves visit http://www.weg.net

Three-Phase General Purpose Motors

WITH INTERNAL AEGIS® SGR

ODP - Three-Phase - Foot Mount and Foot Mount with C-Face

HP	kW	RPM	Frame	Catalog Number	List Price	Mult. Symbol	Approx. Shipping Weight (lbs)	Service Factor	FL Amps @ High	FL. Eff (%)	"C" Dimension (in)	Voltage (V)	Notes
1	0.75	1800	143/5T	00118OT3E143T-SG*	$530	N1S	38	1.15	1.50	85.5	11.181	230/460	9;34
		1800	143/5TC	00118OT3E143TC-SG	$564	N1S	38	1.15	1.50	85.5	11.181	230/460	9;34
		1800	143/5T	00118OT3H143T-SG	$530	N1S	38	1.15	1.20	85.5	11.181	575	9;34;51
		1800	143/5T	00118OT3V143T-SG	$530	N1S	38	1.15	1.70	85.5	11.181	200/400	9;34;51
		1200	143/5T	00112OT3E145T-SG	$586	N1S	38	1.15	1.70	82.5	11.181	230/460	9;34;51
		1200	143/5T	00112OT3H145T-SG	$586	N1S	38	1.15	1.30	82.5	11.181	575	9;34
1.5	1.1	3600	143/5T	00156OT3E143T-SG	$582	N1S	33	1.15	1.90	84.0	11.181	230/460	9;34
		1800	143/5T	00158OT3E145T-SG	$589	N1S	45	1.15	2.10	86.5	12.362	230/460	9;34
		1800	143/5TC	00158OT3E145TC-SG	$623	N1S	45	1.15	2.10	86.5	12.362	230/460	9;34;51
		1800	143/5T	00158OT3H145T-SG	$589	N1S	45	1.15	1.70	86.5	12.362	575	9;34
		1800	143/5T	00158OT3V145T-SG	$589	N1S	45	1.15	2.40	86.5	12.362	200/400	9;34
		1800	143/5TC	00158OT3V145TC-SG	$623	N1S	45	1.15	2.40	86.5	12.362	200/400	9;34;51
		1200	182/4T	00152OT3E182T-SG	$758	N1S	63	1.15	2.30	86.5	13.976	230/460	9;34
2	1.5	3600	143/5T	00236OT3E145T-SG	$627	N1S	40	1.15	2.40	85.5	11.969	230/460	9;34
		1800	143/5T	00218OT3E145T-SG	$632	N1S	43	1.15	2.70	86.5	12.362	230/460	9;34
		1800	143/5TC	00218OT3E145TC-SG	$666	N1S	43	1.15	2.70	86.5	12.362	230/460	9;34;51
		1800	143/5T	00218OT3H145T-SG	$632	N1S	43	1.15	2.20	86.5	12.362	575	9;34;51
		1800	143/5T	00218OT3V145T-SG	$632	N1S	43	1.15	3.10	86.5	12.362	200/400	9;34
		1200	182/4T	00212OT3E184T-SG	$767	N1S	73	1.15	3.00	87.5	14.764	230/460	9;34
3	2.2	3600	143/5T	00336OT3E145T-SG	$685	N1S	44	1.15	3.60	85.5	12.362	230/460	9;34
		1800	182/4T	00318OT3E182T-SG	$694	N1S	73	1.15	3.90	89.5	15.157	230/460	9;34
		1800	182/4TC	00318OT3E182TC-SG	$732	N1S	73	1.15	3.90	89.5	15.157	230/460	9;34
		1800	182/4T	00318OT3H182T-SG	$694	N1S	73	1.15	3.10	89.5	15.157	575	9;34
		1800	182/4T	00318OT3V182T-SG	$694	N1S	73	1.15	4.40	89.5	15.157	200/400	9;34
		1800	182/4TC	00318OT3V182TC-SG	$732	N1S	73	1.15	4.40	89.5	15.157	200/400	9;34;51
		1200	213/5T	00312OT3E213T-SG	$975	N1S	113	1.15	4.20	88.5	16.575	230/460	9;34
		1200	213/5T	00312OT3H213T-SG	$975	N1S	113	1.15	3.30	88.5	16.575	575	9;34
5	3.7	3600	182/4T	00536OT3E182T-SG	$821	N1S	60	1.15	6.10	86.5	13.977	230/460	9;34
		3600	182/4TC	00536OT3E182TC-SG	$859	N1S	59	1.15	6.10	86.5	14.764	230/460	9;34;51
		1800	182/4T	00518OT3E184T-SG	$800	N1S	88	1.15	6.30	89.5	16.339	230/460	9;34
		1800	182/4TC	00518OT3E184TC-SG	$838	N1S	88	1.15	6.30	89.5	16.339	230/460	9;34
		1800	182/4T	00518OT3H184T-SG	$800	N1S	88	1.15	5.10	89.5	16.339	575	9;34
		1800	182/4T	00518OT3V184T-SG	$800	N1S	88	1.15	7.30	89.5	16.339	200/400	9;34
		1800	182/4TC	00518OT3V184TC-SG	$838	N1S	88	1.15	7.30	89.5	16.339	200/400	9;34;51
		1200	213/5T	00512OT3E215T-SG	$1,257	N1S	135	1.15	6.70	89.5	16.969	230/460	9;34

continued on next page

Please refer to inside back cover for description of "NOTES"

For detailed specifications, data sheets, drawings and performance curves visit http://www.weg.net

Data subject to change without notice.

ODP - Three-Phase - Foot Mount and Foot Mount with C-Face - *continued*

HP	kW	RPM	Frame	Catalog Number	List Price	Mult. Symbol	Approx. Shipping Weight (lbs)	Service Factor	FL Amps @ High	FL. Eff (%)	"C" Dimension (in)	Voltage (V)	Notes
7.5	5.5	3600	182/4T	00736OT3E184T-SG	$1,090	N1S	70	1.15	8.70	88.5	14.764	230/460	9;34
		3600	182/4TC	00736OT3E184TC-SG	$1,128	N1S	76	1.15	8.70	88.5	15.157	230/460	9;34;51
		1800	213/5T	00718OT3E213T-SG	$1,110	N1S	125	1.15	9.30	91.0	16.575	230/460	9;34
		1800	213/5TC	00718OT3E213TC-SG	$1,161	N1S	125	1.15	9.30	91.0	16.575	230/460	9;34
		1800	213/5T	00718OT3H213T-SG	$1,110	N1S	125	1.15	7.40	91.0	16.575	575	9;34
		1800	213/5T	00718OT3V213T-SG	$1,110	N1S	125	1.15	10.6	91.0	16.575	200/400	9;34
		1800	213/5TC	00718OT3V213TC-SG	$1,161	N1S	125	1.15	10.6	91.0	16.575	200/400	9;34
		1200	254/6T	00712OT3E254T-SG	$1,747	N1S	209	1.15	10.2	90.2	20.472	230/460	9;34
		1200	254/6TC	00712OT3E254TC-SG	$1,815	N1S	209	1.15	10.2	90.2	20.472	230/460	9;34
		1200	254/6T	00712OT3H254T-SG	$1,747	N1S	209	1.15	8.20	90.2	20.472	575	9;34
10	7.5	3600	213/5T	01036OT3E213T-SG	$1,281	N1S	117	1.15	12.0	89.5	16.575	230/460	9;34
		3600	213/5TC	01036OT3E213TC-SG	$1,332	N1S	126	1.15	12.0	89.5	16.969	230/460	9;34;51
		1800	213/5T	01018OT3E215T-SG	$1,302	N1S	130	1.15	12.4	91.7	16.575	230/460	9;34
		1800	213/5TC	01018OT3E215TC-SG	$1,353	N1S	130	1.15	12.4	91.7	16.575	230/460	9;34
		1800	213/5T	01018OT3H215T-SG	$1,302	N1S	130	1.15	9.90	91.7	16.575	575	9;34
		1800	213/5T	01018OT3V215T-SG	$1,302	N1S	130	1.15	14.3	91.7	16.575	200/400	9;34;51
		1800	213/5TC	01018OT3V215TC-SG	$1,353	N1S	130	1.15	14.3	91.7	16.575	200/400	9;34
		1200	254/6T	01012OT3E256T-SG	$1,997	N1S	237	1.15	13.9	91.7	20.472	230/460	9;34
		1200	254/6T	01012OT3H256T-SG	$1,997	N1S	237	1.15	11.1	91.7	20.472	575	9;34
15	11	3600	213/5T	01536OT3E215T-SG	$1,692	N1S	141	1.15	17.2	90.2	17.756	230/460	9;34
		3600	213/5TC	01536OT3E215TC-SG	$1,743	N1S	141	1.15	17.2	90.2	17.756	230/460	9;34;51
		1800	254/6T	01518OT3E254T-SG	$1,757	N1S	211	1.15	18.6	93.0	20.472	230/460	9;34
		1800	254/6TC	01518OT3E254TC-SG	$1,825	N1S	211	1.15	18.6	93.0	20.472	230/460	9;34
		1800	254/6T	01518OT3H254T-SG	$1,757	N1S	211	1.15	14.9	93.0	20.472	575	9;34
		1800	254/6T	01518OT3V254T-SG	$1,757	N1S	211	1.15	21.4	93.0	20.472	200/400	9;34
		1200	284T	01512OT3E284T-W40G	$2,722	N1B	340	1.25	18.4	91.7	23.158	230/460	34
20	15	3600	254/6T	02036OT3E254T-SG	$2,040	N1S	187	1.15	23.8	91.0	20.472	230/460	9;34
		3600	254/6TC	02036OT3E254TC-SG	$2,108	N1S	187	1.15	23.8	91.0	20.472	230/460	9;34;51
		1800	254/6T	02018OT3E256T-SG	$2,112	N1S	235	1.15	25.0	93.0	20.472	230/460	9;34
		1800	254/6TC	02018OT3E256TC-SG	$2,180	N1S	235	1.15	25.0	93.0	20.472	230/460	9;34
		1800	254/6T	02018OT3H256T-SG	$2,112	N1S	235	1.15	20.0	93.0	20.472	575	9;34
		1800	254/6T	02018OT3V256T-SG	$2,112	N1S	235	1.15	28.8	93.0	20.472	200/400	9;34
		1800	254/6TC	02018OT3V256TC-SG	$2,180	N1S	235	1.15	28.8	93.0	20.472	200/400	9;34
		1200	284/6T	02012OT3E286T-W40G	$3,344	N1B	415	1.25	24.3	92.4	24.658	230/460	34
25	18.5	3600	254/6T	02536OT3E256T-SG	$2,419	N1S	202	1.15	29.1	91.7	20.472	230/460	9;34
		3600	254/6TC	02536OT3E256TC-SG	$2,487	N1S	202	1.15	29.1	91.7	20.472	230/460	9;34;51
		1800	284T	02518OT3E284T-W40G	$2,470	N1B	381	1.25	29.5	93.6	23.158	230/460	34
		1800	284TC	02518OT3E284TC-W40G	$2,555	N1B	388	1.25	29.5	93.6	23.158	230/460	34
		1800	284T	02518OT3H284T-W40G	$2,470	N1B	380	1.25	23.6	93.6	23.158	575	34
		1800	284T	02518OT3V284T-W40G	$2,470	N1B	372	1.25	33.9	93.6	23.158	200/400	34
		1200	324T	02512OT3E324T-W40G	$3,919	N1B	485	1.25	30.8	93.0	25.807	230/460	34

continued on next page

Please refer to inside back cover for description of "NOTES"

For detailed specifications, data sheets, drawings and performance curves visit http://www.weg.net

Three-Phase General Purpose Motors

WITH INTERNAL AEGIS® SGR

ODP - Three-Phase - Foot Mount and Foot Mount with C-Face - *continued*

HP	kW	RPM	Frame	Catalog Number	List Price	Mult. Symbol	Approx. Shipping Weight (lbs)	Service Factor	FL Amps @ High	FL. Eff (%)	"C" Dimension (in)	Voltage (V)	Notes
30	22	3600	284TS	030360T3E284TS-W40G	$2,797	N1B	333	1.25	35.0	91.7	21.783	230/460	34
		1800	284/6T	030180T3E286T-W40G	$2,840	N1B	428	1.25	34.9	94.1	24.658	230/460	34
		1800	284/6TC	030180T3E286TC-W40G	$2,925	N1B	435	1.25	34.9	94.1	24.658	230/460	34
		1800	284/6T	030180T3H286T-W40G	$2,840	N1B	432	1.25	27.9	94.1	24.658	575	34
		1800	284/6T	030180T3V286T-W40G	$2,840	N1B	432	1.25	40.1	94.1	24.658	200/400	34
		1200	324/6T	030120T3E326T-W40G	$4,290	N1B	548	1.25	36.0	93.6	27.307	230/460	34
40	30	3600	284/6TS	040360T3E286TS-W40G	$3,618	N1B	377	1.25	46.8	92.4	23.283	230/460	34
		3600	284/6TSC	040360T3E286TSC-W40G	$3,703	N1B	397	1.25	46.8	92.4	23.283	230/460	34
		1800	324TS	040180T3E324TS-W40G	$3,372	N1B	505	1.25	47.6	94.1	24.307	230/460	34
		1800	324T	040180T3E324T-W40G	$3,495	N1B	481	1.25	47.6	94.1	25.807	230/460	34
		1800	324TC	040180T3E324TC-W40G	$3,595	N1B	497	1.25	47.6	94.1	25.807	230/460	34
		1800	324T	040180T3H324T-W40G	$3,495	N1B	505	1.25	38.1	94.1	25.807	575	34
		1800	324T	040180T3V324T-W40G	$3,495	N1B	486	1.25	54.7	94.1	25.807	200/400	34
		1800	324TC	040180T3V324TC-W40G	$3,595	N1B	505	1.25	54.7	94.1	25.807	200/400	34;51
		1200	364/5T	040120T3E364T-W40G	$6,384	N1B	855	1.25	47.1	94.1	29.725	230/460	34
50	37	3600	324TS	050360T3E324TS-W40G	$4,097	N1B	520	1.25	58.7	93.0	24.307	230/460	34
		3600	324TSC	050360T3E324TSC-W40G	$4,197	N1B	520	1.25	58.7	93.0	24.307	230/460	34
		1800	324/6T	050180T3E326T-W40G	$4,188	N1B	544	1.25	58.5	94.5	27.307	230/460	34
		1800	324/6TC	050180T3E326TC-W40G	$4,288	N1B	563	1.25	58.5	94.5	27.307	230/460	34
		1800	324/6T	050180T3H326T-W40G	$4,188	N1B	535	1.25	46.8	94.5	27.307	575	34
		1800	324/6T	050180T3V326T-W40G	$4,188	N1B	520	1.25	67.3	94.5	27.307	200/400	34
		1200	364/5T	050120T3E365T-W40G	$7,232	N1B	884	1.25	58.1	94.1	29.725	230/460	34;51
60	45	3600	324/6TS	060360T3E326TS-W40G	$4,858	N1B	548	1.25	71.0	93.6	25.807	230/460	34
		1800	364/5T	060180T3E364T-W40G	$5,283	N1B	854	1.25	69.9	95.0	29.725	230/460	34
		1800	364/5TC	060180T3E364TC-W40G	$5,677	N1B	881	1.25	69.9	95.0	29.725	230/460	34
		1800	364/5T	060180T3H364T-W40G	$5,283	N1B	847	1.25	55.9	95.0	29.725	575	34
		1200	404/5T	060120T3E404T-W40G	$8,762	N1B	1051	1.25	70.3	94.5	34.100	230/460	34;51
75	55	3600	364/5TS	075360T3E364TS-W40G	$6,172	N1B	789	1.25	84.8	93.6	27.522	230/460	34
		3600	364/5TSC	075360T3E364TSC-W40G	$6,566	N1B	794	1.25	84.8	93.6	27.522	230/460	34;51
		1800	364/5T	075180T3E365T-W40G	$6,498	N1B	878	1.25	85.5	95.0	29.725	230/460	34
		1800	364/5TC	075180T3E365TC-W40G	$6,892	N1B	904	1.25	85.5	95.0	29.725	230/460	34
		1800	364/5T	075180T3H365T-W40G	$6,498	N1B	875	1.25	68.4	95.0	29.725	575	34
		1200	404/5T	075120T3E405T-W40G	$9,558	N1B	1087	1.25	85.9	94.5	34.100	230/460	34;51
100	75	3600	364/5TS	100360T3E365TS-W40G	$7,484	N1B	835	1.25	116	93.6	27.522	230/460	34;51
		1800	404/5TS	100180T3E404TS-W40G	$7,751	N1B	1047	1.25	115	95.4	31.100	230/460	34
		1800	404/5T	100180T3E404T-W40G	$8,341	N1B	1064	1.25	115	95.4	34.100	230/460	34
		1800	404/5T	100180T3H404T-W40G	$8,341	N1B	1070	1.25	92.0	95.4	34.100	575	34
		1200	444/5T	100120T3E444T-W40G	$13,463	N1B	1403	1.25	127	95.0	38.108	230/460	34;51
125	90	3600	404/5TS	125360T3E404TS-W40G	$10,026	N1B	955	1.25	136	94.1	31.100	230/460	34;51
		1800	404/5T	125180T3E405T-W40G	$9,181	N1B	1156	1.25	138	95.4	34.100	230/460	34;51
		1800	404/5TC	125180T3E405TC-W40G	$9,627	N1B	1156	1.25	138	95.4	34.100	230/460	34
		1800	404/5T	125180T3H405T-W40G	$9,181	N1B	1156	1.25	110	95.4	34.100	575	34;51
		1200	444/5T	125120T3G445T-W40G	$14,353	N1B	1497	1.25	154	95.0	38.108	460	34;51
150	110	3600	404/5TS	150360T3G405TS-W40G	$12,616	N1B	1004	1.25	167	94.1	31.100	460	34;51

** To be discontinued and replaced by W40 model once inventory is depleted.*

Please refer to inside back cover for description of "NOTES"

For detailed specifications, data sheets, drawings and performance curves visit http://www.weg.net

Data subject to change without notice.

Three-Phase General Purpose Motors

IEEE 841 - THREE PHASE
TEFC - NEMA Premium®

WEG's IEEE 841 motors are specially suited for Pulp & Paper mills, Steel mills, Petrochemical Plants and diverse demanding applications requiring severe duty long life motors.

WEG's W22 cast iron platform has an improved cooling system and solid feet for cooler operation and reduced vibration and noise extending the life of the motor.

Standard Features:

- Class F insulation (Impregnation Resin and magnet wire are class H)
- F1 Mounted (F2 convertible). Frames 447T and up can easily be F2 converted by simply rotating the terminal box adapter
- Stainless Steel Nameplate - Laser etched with high contrast background
- All frames with regreasable ball bearings
- Class I, Div. 2, Groups A, B, C & D – T3
- Corrosion resistant Epoxy Paint system (C4 per ISO12944)

***Inverter Rated:**
1000:1 for variable torque
20:1 for constant torque

** Frame 586/7 250HP and up 6:1 CT and 1000:1 VT*

** Insulated bearing housing on the NDE standard on L447/9T and above*

Features that make a difference:

- 1.25 Service Factor up to 100 HP
- InproSeal Bearing Isolators both ends
- Bearing protection meets IP56
- Rubber lead separator between terminal box and frame
- Vibration: 0.04 inches per second or less
- Guaranteed foot flatness to within 0.005"
- Bearing life 50,000 hours (L-10)
- Epoxy Paint system exceeds 250hrs Salt Spray test
- Interior surfaces are epoxy coated
- Non-sparking fan
- NPT Threaded terminal box
- Seamless copper lead lugs
- Seamless Stainless Steel grease extension tubes
- Automatic grease relief fittings
- IEEE 841 Link to Test Report in conduit box
- Suitable for IEEE45 and USCG 259 – Marine Duty

Three-Phase General Purpose Motors

IEEE 841 - Three-Phase

TEFC - Foot Mount

HP	kW	RPM	Frame	Catalog Number	List Price	Mult. Symbol	Approx. Shipping Weight (lbs)	Service Factor	FL Amps @ High	FL. Eff (%)	"C" Dimension (in)	Voltage (V)	Notes
1	0.75	1800	143/5T	00118ST3QIE143T-W22	$922	I1	58	1.25	1.47	85.5	13.358	460	
		1800	143/5T	00118ST3HIE143T-W22	$922	I1	58	1.25	1.18	85.5	13.358	575	
		1200	143/5T	00112ST3QIE145T-W22	$1,062	I1	66	1.25	1.73	82.5	13.358	460	
		1200	143/5T	00112ST3HIE145T-W22	$1,062	I1	66	1.25	1.38	82.5	13.358	575	
		900	182/4T	00109ST3QIE182T-W22	$2,006	I1	97	1.25	2.30	78.5	15.860	460	
1.5	1.1	3600	143/5T	00156ST3QIE143T-W22	$981	I1	59	1.25	1.96	84.0	13.358	460	
		3600	143/5T	00156ST3HIE143T-W22	$981	I1	43	1.25	1.57	84.0	13.358	575	
		1800	143/5T	00158ST3QIE145T-W22	$981	I1	63	1.25	2.02	86.5	13.358	460	
		1800	143/5T	00158ST3HIE145T-W22	$981	I1	63	1.25	1.62	86.5	13.358	575	
		1200	182/4T	00152ST3QIE182T-W22	$1,286	I1	108	1.25	2.54	87.5	15.860	460	
		1200	182/4T	00152ST3HIE182T-W22	$1,286	I1	74	1.25	2.03	87.5	15.860	575	
		900	182/4T	00159ST3QIE184T-W22	$2,016	I1	112	1.25	2.70	82.5	15.860	460	
2	1.5	3600	143/5T	00236ST3QIE145T-W22	$1,023	I1	64	1.25	2.56	85.5	13.358	460	
		3600	143/5T	00236ST3HIE145T-W22	$1,023	I1	64	1.25	2.05	85.5	13.358	575	
		1800	143/5T	00218ST3QIE145T-W22	$1,023	I1	64	1.25	2.76	86.5	13.358	460	
		1800	143/5T	00218ST3HIE145T-W22	$1,023	I1	64	1.25	2.21	86.5	13.358	575	
		1200	182/4T	00212ST3QIE184T-W22	$1,363	I1	113	1.25	3.22	88.5	15.860	460	
		1200	182/4T	00212ST3HIE184T-W22	$1,363	I1	114	1.25	2.58	88.5	15.860	575	39
		900	213/5T	00209ST3QIE213T-W22	$2,701	I1	154	1.25	3.39	85.5	19.517	460	
3	2.2	3600	182/4T	00336ST3QIE182T-W22	$1,267	I1	109	1.25	3.63	86.5	15.860	460	
		3600	182/4T	00336ST3HIE182T-W22	$1,267	I1	108	1.25	2.90	86.5	15.860	575	
		1800	182/4T	00318ST3QIE182T-W22	$1,224	I1	106	1.25	3.91	89.5	15.860	460	
		1800	182/4T	00318ST3HIE182T-W22	$1,224	I1	104	1.25	3.13	89.5	15.860	575	
		1200	213/5T	00312ST3QIE213T-W22	$1,537	I1	173	1.25	4.41	89.5	19.517	460	
		1200	213/5T	00312ST3HIE213T-W22	$1,537	I1	173	1.25	3.53	89.5	19.517	575	
		900	213/5T	00309ST3QIE215T-W22	$2,883	I1	199	1.25	4.55	85.5	19.517	460	
5	3.7	3600	182/4T	00536ST3QIE184T-W22	$1,429	I1	116	1.25	5.90	88.5	15.860	460	
		3600	182/4T	00536ST3HIE184T-W22	$1,429	I1	116	1.25	4.72	88.5	15.860	575	
		1800	182/4T	00518ST3QIE184T-W22	$1,371	I1	115	1.25	6.45	89.5	15.860	460	
		1800	182/4T	00518ST3HIE184T-W22	$1,371	I1	115	1.25	5.16	89.5	15.860	575	
		1200	213/5T	00512ST3QIE215T-W22	$1,901	I1	191	1.25	6.83	89.5	19.517	460	
		1200	213/5T	00512ST3HIE215T-W22	$1,901	I1	191	1.25	5.46	89.5	19.517	575	
		900	254/6T	00509ST3QIE254T-W22	$4,243	I1	306	1.25	7.58	87.5	24.945	460	
7.5	5.5	3600	213/5T	00736ST3QIE213T-W22	$1,751	I1	174	1.25	8.76	89.5	19.517	460	
		3600	213/5T	00736ST3HIE213T-W22	$1,751	I1	173	1.25	7.01	89.5	19.517	575	
		1800	213/5T	00718ST3QIE213T-W22	$1,646	I1	185	1.25	9.18	91.7	19.517	460	
		1800	213/5T	00718ST3HIE213T-W22	$1,646	I1	185	1.25	7.34	91.7	19.517	575	
		1200	254/6T	00712ST3QIE254T-W22	$2,544	I1	322	1.25	9.48	91.0	24.945	460	
		1200	254/6T	00712ST3HIE254T-W22	$2,544	I1	299	1.25	7.58	91.0	24.945	575	
		900	254/6T	00709ST3QIE256T-W22	$5,040	I1	321	1.25	11.1	87.5	24.945	460	

continued on next page

Please refer to inside back cover for description of "NOTES"

For detailed specifications, data sheets, drawings and performance curves visit http://www.weg.net

Data subject to change without notice.

TEFC - Foot Mount - *continued*

HP	kW	RPM	Frame	Catalog Number	List Price	Mult. Symbol	Approx. Shipping Weight (lbs)	Service Factor	FL Amps @ High	FL. Eff (%)	"C" Dimension (in)	Voltage (V)	Notes
10	7.5	3600	213/5T	01036ST3QIE215T-W22	$1,920	I1	191	1.25	11.6	90.2	19.517	460	
		3600	213/5T	01036ST3HIE215T-W22	$1,920	I1	191	1.25	9.28	90.2	19.517	575	
		1800	213/5T	01018ST3QIE215T-W22	$1,760	I1	188	1.25	12.4	91.7	19.517	460	
		1800	213/5T	01018ST3HIE215T-W22	$1,760	I1	199	1.25	9.92	91.7	19.517	575	
		1200	254/6T	01012ST3QIE256T-W22	$2,834	I1	329	1.25	12.9	91.0	24.945	460	
		1200	254/6T	01012ST3HIE256T-W22	$2,834	I1	329	1.25	10.3	91.0	24.945	575	
		900	284/6T	01009ST3QIE284T-W22	$5,936	I1	380	1.25	13.4	90.2	27.929	460	
15	11	3600	254/6T	01536ST3QIE254T-W22	$2,428	I1	303	1.25	17.2	91.0	24.945	460	
		3600	254/6T	01536ST3HIE254T-W22	$2,428	I1	303	1.25	13.8	91.0	24.945	575	
		1800	254/6T	01518ST3QIE254T-W22	$2,257	I1	341	1.25	18.0	92.4	24.945	460	
		1800	254/6T	01518ST3HIE254T-W22	$2,257	I1	351	1.25	14.4	92.4	24.945	575	
		1200	284/6T	01512ST3QIE284T-W22	$4,203	I1	430	1.25	17.9	91.7	27.929	460	
		1200	284/6T	01512ST3HIE284T-W22	$4,203	I1	425	1.25	14.3	91.7	27.929	575	
		900	284/6T	01509ST3QIE286T-W22	$6,742	I1	437	1.25	19.4	90.2	27.929	460	
20	15	3600	254/6T	02036ST3QIE256T-W22	$2,957	I1	329	1.25	23.2	91.0	24.945	460	
		3600	254/6T	02036ST3HIE256T-W22	$2,957	I1	328	1.25	18.6	91.0	24.945	575	
		1800	254/6T	02018ST3QIE256T-W22	$2,597	I1	385	1.25	24.1	93.0	24.945	460	
		1800	254/6T	02018ST3HIE256T-W22	$2,597	I1	400	1.25	19.3	93.0	24.945	575	
		1200	284/6T	02012ST3QIE286T-W22	$4,773	I1	456	1.25	24.2	91.7	27.929	460	
		1200	284/6T	02012ST3HIE286T-W22	$4,773	I1	456	1.25	19.4	91.7	27.929	575	
		900	324/6T	02009ST3QIE324T-W22	$8,269	I1	551	1.25	28.3	91.0	31.116	460	
25	18.5	3600	284/6TS	02536ST3QIE284TS-W22	$3,368	I1	413	1.25	28.5	91.7	26.557	460	
		3600	284/6TS	02536ST3HIE284TS-W22	$3,368	I1	403	1.25	22.8	91.7	26.557	575	
		1800	284/6T	02518ST3QIE284T-W22	$2,926	I1	448	1.25	29.5	93.6	27.929	460	
		1800	284/6T	02518ST3HIE284T-W22	$2,926	I1	447	1.25	23.6	93.6	27.929	575	
		1200	324/6T	02512ST3QIE324T-W22	$5,211	I1	588	1.25	30.4	93.0	31.116	460	
		1200	324/6T	02512ST3HIE324T-W22	$5,211	I1	587	1.25	24.3	93.0	31.116	575	
		900	324/6T	02509ST3QIE326T-W22	$8,838	I1	596	1.25	35.9	91.0	31.116	460	
30	22	3600	284/6TS	03036ST3QIE286TS-W22	$3,799	I1	433	1.25	33.8	91.7	26.557	460	
		3600	284/6TS	03036ST3HIE286TS-W22	$3,799	I1	433	1.25	27.0	91.7	26.557	575	
		1800	284/6T	03018ST3QIE286T-W22	$3,509	I1	454	1.25	35.1	93.6	27.929	460	
		1800	284/6T	03018ST3HIE286T-W22	$3,509	I1	484	1.25	28.1	93.6	27.929	575	
		1200	324/6T	03012ST3QIE326T-W22	$5,359	I1	633	1.25	35.8	93.0	31.116	460	
		1200	324/6T	03012ST3HIE326T-W22	$5,359	I1	632	1.25	28.6	93.0	31.116	575	
		900	364/5T	03009ST3QIE364T-W22	$13,149	I1	900	1.25	37.0	92.4	34.251	460	
40	30	3600	324/6TS	04036ST3QIE324TS-W22	$5,306	I1	591	1.25	45.8	92.4	29.616	460	
		3600	324/6TS	04036ST3HIE324TS-W22	$5,306	I1	591	1.25	36.6	92.4	29.616	575	
		1800	324/6T	04018ST3QIE324T-W22	$4,692	I1	590	1.25	47.1	94.1	31.116	460	
		1800	324/6T	04018ST3HIE324T-W22	$4,692	I1	617	1.25	37.7	94.1	31.116	575	
		1200	364/5T	04012ST3QIE364T-W22	$8,636	I1	1007	1.25	46.5	94.1	34.251	460	
		1200	364/5T	04012ST3HIE364T-W22	$8,636	I1	1003	1.25	37.2	94.1	34.251	575	
		900	364/5T	04009ST3QIE365T-W22	$14,909	I1	955	1.25	50.3	92.4	34.251	460	

continued on next page

Please refer to inside back cover for description of "NOTES"

For detailed specifications, data sheets, drawings and performance curves visit http://www.weg.net

Three-Phase General Purpose Motors

IEEE 841 - Three-Phase

TEFC - Foot Mount - *continued*

HP	kW	RPM	Frame	Catalog Number	List Price	Mult. Symbol	Approx. Shipping Weight (lbs)	Service Factor	FL Amps @ High	FL. Eff (%)	"C" Dimension (in)	Voltage (V)	Notes
50	37	3600	324/6TS	05036ST3QIE326TS-W22	$5,970	I1	613	1.25	56.1	93.0	29.616	460	
		3600	324/6TS	05036ST3HIE326TS-W22	$5,970	I1	612	1.25	44.9	93.0	29.616	575	
		1800	324/6T	05018ST3QIE326T-W22	$5,233	I1	610	1.25	59.2	94.5	31.116	460	
		1800	324/6T	05018ST3HIE326T-W22	$5,233	I1	636	1.25	47.4	94.5	31.116	575	
		1200	364/5T	05012ST3QIE365T-W22	$9,369	I1	1022	1.25	57.4	94.1	34.251	460	
		1200	364/5T	05012ST3HIE365T-W22	$9,369	I1	1019	1.25	45.9	94.1	34.251	575	
		900	404/5T	05009ST3QIE404T-W22	$19,331	I1	1214	1.25	60.0	93.0	39.730	460	
60	45	3600	364/5TS	06036ST3QIE364TS-W22	$8,665	I1	965	1.25	67.0	93.6	32.338	460	
		3600	364/5TS	06036ST3HIE364TS-W22	$8,665	I1	963	1.25	53.6	93.6	32.338	575	
		1800	364/5T	06018ST3QIE364T-W22	$8,044	I1	957	1.25	68.3	95.0	34.251	460	
		1800	364/5T	06018ST3HIE364T-W22	$8,044	I1	1030	1.25	54.6	95.0	34.251	575	
		1200	404/5T	06012ST3QIE404T-W22	$11,790	I1	1253	1.25	69.5	94.5	39.730	460	
		1200	404/5T	06012ST3HIE404T-W22	$11,790	I1	1249	1.25	55.6	94.5	39.730	575	
		900	404/5T	06009ST3QIE405T-W22	$22,579	I1	1261	1.25	73.0	93.0	39.730	460	
75	55	3600	364/5TS	07536ST3QIE365TS-W22	$10,210	I1	1012	1.25	81.9	93.6	32.338	460	
		3600	364/5TS	07536ST3HIE365TS-W22	$10,210	I1	972	1.25	65.5	93.6	32.338	575	
		1800	364/5T	07518ST3QIE365T-W22	$9,289	I1	996	1.25	84.1	95.4	34.251	460	
		1800	364/5T	07518ST3QIERB365T-W2	$10,019	I1	1019	1.25	84.1	95.4	34.251	460	14
		1800	364/5T	07518ST3HIE365T-W22	$9,289	I1	1045	1.25	67.3	95.4	34.251	575	
		1200	404/5T	07512ST3QIE405T-W22	$12,866	I1	1317	1.25	84.9	94.5	39.730	460	
		1200	404/5T	07512ST3QIERB405T-W2	$12,866	I1	1326	1.25	84.9	94.5	39.730	460	14
		1200	404/5T	07512ST3HIE405T-W22	$12,866	I1	1298	1.25	67.9	94.5	39.730	575	
		900	444/5T	07509ST3QIE444T-W22	$23,457	I1	1666	1.25	93.0	93.6	44.950	460	
100	75	3600	404/5TS	10036ST3QIE405TS-W22	$12,806	I1	1182	1.25	110	94.1	36.732	460	
		3600	404/5TS	10036ST3HIE405TS-W22	$12,806	I1	1191	1.25	88.0	94.1	36.732	575	
		1800	404/5T	10018ST3QIE405T-W22	$12,471	I1	1276	1.25	116	95.4	39.730	460	
		1800	404/5T	10018ST3QIERB405T-W2	$12,471	I1	1292	1.25	116	95.4	39.730	460	14
		1800	404/5T	10018ST3HIE405T-W22	$12,471	I1	1339	1.25	92.8	95.4	39.730	575	
		1800	404/5T	10018ST3HIERB405T-W2	$12,471	I1	1348	1.25	92.8	95.4	39.730	575	14
		1200	444/5T	10012ST3QIE444T-W22	$17,933	I1	1800	1.25	121	95.0	44.950	460	
		1200	444/5T	10012ST3QIERB444T-W2	$17,933	I1	1915	1.25	121	95.0	44.950	460	14
		1200	444/5T	10012ST3HIE444T-W22	$17,933	I1	1900	1.25	96.8	95.0	44.950	575	
		900	444/5T	10009ST3QIE445T-W22	$24,681	I1	1944	1.25	127	94.1	44.950	460	
		900	444/5T	10009ST3QIERB445T-W2	$24,681	I1	1763	1.25	127	94.1	44.950	460	14
125	90	3600	444/5TS	12536ST3QIE444TS-W22	$18,198	I1	1805	1.15	134	95.0	41.200	460	
		3600	444/5TS	12536ST3HIE444TS-W22	$18,198	I1	1796	1.15	107	95.0	41.200	575	
		1800	444/5T	12518ST3QIE444T-W22	$16,564	I1	1708	1.15	139	95.4	44.950	460	
		1800	444/5T	12518ST3QIERB444T-W2	$16,564	I1	1836	1.15	139	95.4	44.950	460	14
		1800	444/5T	12518ST3HIE444T-W22	$16,564	I1	1822	1.15	111	95.4	44.950	575	
		1200	444/5T	12512ST3QIE445T-W22	$20,158	I1	2016	1.15	143	95.0	44.950	460	
		1200	444/5T	12512ST3QIERB445T-W2	$20,158	I1	2028	1.15	143	95.0	44.950	460	14
		1200	444/5T	12512ST3HIE445T-W22	$20,158	I1	2013	1.15	114	95.0	44.950	575	
		900	445/7T	12509ST3QIE447T-W22	$29,733	I1	2239	1.15	151	94.5	48.701	460	
		900	445/7T	12509ST3QIERB447T-W2	$29,733	I1	2273	1.15	151	94.5	48.701	460	14

continued on next page

Please refer to inside back cover for description of "NOTES"

For detailed specifications, data sheets, drawings and performance curves visit http://www.weg.net

Data subject to change without notice.

TEFC - Foot Mount - *continued*

HP	kW	RPM	Frame	Catalog Number	List Price	Mult. Symbol	Approx. Shipping Weight (lbs)	Service Factor	FL Amps @ High	FL. Eff (%)	"C" Dimension (in)	Voltage (V)	Notes
150	110	3600	444/5TS	15036ST3QIE445TS-W22	$21,433	I1	1900	1.15	161	95.0	41.200	460	
		3600	444/5TS	15036ST3HIE445TS-W22	$21,433	I1	1908	1.15	129	95.0	41.200	575	
		1800	444/5T	15018ST3QIE445T-W22	$18,587	I1	1910	1.15	170	95.8	44.950	460	
		1800	444/5T	15018ST3QIERB445T-W2	$18,587	I1	2041	1.15	170	95.8	44.950	460	14
		1800	444/5T	15018ST3HIE445T-W22	$18,587	I1	2027	1.15	136	95.8	44.950	575	
		1800	444/5T	15018ST3HIERB445T-W2	$18,587	I1	2038	1.15	136	95.8	44.950	575	14
		1200	445/7T	15012ST3QIE447T-W22	$23,181	I1	2511	1.15	176	95.8	48.701	460	
		1200	445/7T	15012ST3QIERB447T-W2	$23,181	I1	2543	1.15	176	95.8	48.701	460	14
		1200	445/7T	15012ST3HIE447T-W22	$23,181	I1	2531	1.15	141	95.8	48.701	575	
		900	445/7T	15009ST3QIE447T-W22	$34,755	I1	2409	1.15	185	94.5	48.701	460	
		900	445/7T	15009ST3QIERB447T-W2	$34,755	I1	2421	1.15	185	94.5	48.701	460	14,51
200	150	3600	445/7TS	20036ST3QIE447TS-W22	$28,568	I1	2240	1.15	219	95.4	44.951	460	
		3600	445/7TS	20036ST3HIE447TS-W22	$28,568	I1	2209	1.15	175	95.4	44.951	575	
		1800	445/7T	20018ST3QIE447T-W22	$23,696	I1	2320	1.15	230	96.2	48.701	460	
		1800	445/7T	20018ST3QIERB447T-W2	$23,696	I1	2520	1.15	230	96.2	48.701	460	14
		1800	445/7T	20018ST3HIE447T-W22	$23,696	I1	2502	1.15	184	96.2	48.701	575	
		1200	447/9T	20012ST3QIE449T-W22	$27,557	I1	2978	1.15	237	95.8	56.338	460	
		1200	447/9T	20012ST3QIERB449T-W2	$27,557	I1	3052	1.15	237	95.8	56.338	460	14
		1200	447/9T	20012ST3HIE449T-W22	$27,577	I1	3030	1.15	190	95.8	56.338	575	
		1200	447/9T	20012ST3HIERB449T-W2	$27,557	I1	3046	1.15	190	95.8	56.338	575	14
		900	L447/9T	20009ST3QIE449T-W22	$57,394	I1	3655	1.15	242	95.0	57.181	460	43
		900	L447/9T	20009ST3QIERB449T-W2	$57,394	I1	3669	1.15	242	95.0	57.181	460	14,43
		900	L447/9T	20009ST3HIE449T-W22	$57,394	I1	3569	1.15	194	95.0	57.181	575	43
250	185	3600	447/9TS	25036ST3QIE449TS-W22	$34,663	I1	2603	1.15	266	95.8	52.940	460	
		1800	447/9T	25018ST3QIE449T-W22	$30,081	I1	2904	1.15	281	96.2	56.338	460	
		1800	447/9T	25018ST3QIERB449T-W2	$30,081	I1	2869	1.15	281	96.2	56.338	460	14
		1200	447/9T	25012ST3QIE449T-W22	$39,415	I1	3190	1.15	292	95.8	56.338	460	
		1200	447/9T	25012ST3QIERB449T-W2	$39,415	I1	2702	1.15	292	95.8	56.338	460	14
300	220	1800	447/9T	30018ST3QIE449T-W22	$36,810	I1	3102	1.15	330	96.2	56.338	460	
		1800	447/9T	30018ST3QIERB449T-W2	$36,810	I1	3130	1.15	330	96.2	56.338	460	14
		1200	L447/9T	30012ST3QIE449T-W22	$44,648	I1	3645	1.15	351	95.8	57.181	460	43
		1200	L447/9T	30012ST3QIERB449T-W2	$44,648	I1	3571	1.15	351	95.8	57.181	460	14,43
350	260	1800	L447/9T	35018ST3QIE449T-W22	$44,105	I1	3580	1.15	394	96.2	57.181	460	43
		1800	L447/9T	35018ST3QIERB449T-W2	$44,105	I1	3580	1.15	394	96.2	57.181	460	14,43
		1200	L447/9T	35012ST3QIERB449T-W2	$52,634	I1	3756	1.15	415	95.8	57.181	460	14,43
400	300	1800	L447/9T	40018ST3QIE449T-W22	$48,396	I1	3467	1.15	455	96.2	57.181	460	43
		1800	L447/9T	40018ST3QIERB449T-W2	$48,396	I1	3467	1.15	455	96.2	57.181	460	14,43

Please refer to inside back cover for description of "NOTES"

For detailed specifications, data sheets, drawings and performance curves visit http://www.weg.net

Three-Phase General Purpose Motors

IEEE 841 - Three-Phase

TEFC - C-Face - Foot Mount

HP	kW	RPM	Frame	Catalog Number	List Price	Mult. Symbol	Approx. Shipping Weight (lbs)	Service Factor	FL Amps @ High	FL. Eff (%)	"C" Dimension (in)	Voltage (V)	Notes
1	0.75	1800	143/5TC	00118ST3QIE143TC-W22	$972	I1	55	1.25	1.47	85.5	13.358	460	
		1200	143/5TC	00112ST3QIE145TC-W22	$1,112	I1	63	1.25	1.73	82.5	13.358	460	
1.5	1.1	3600	143/5TC	00156ST3QIE143TC-W22	$1,031	I1	57	1.25	1.96	84.0	13.358	460	
		1800	143/5TC	00158ST3QIE145TC-W22	$1,031	I1	61	1.25	2.02	86.5	13.358	460	
		1200	182/4TC	00152ST3QIE182TC-W22	$1,351	I1	112	1.25	2.54	87.5	15.860	460	
		900	182/4TC	00159ST3QIE184TC-W22	$2,081	I1	116	1.25	2.70	82.5	15.860	460	
2	1.5	3600	143/5TC	00236ST3QIE145TC-W22	$1,073	I1	62	1.25	2.56	85.5	13.358	460	
		1800	143/5TC	00218ST3QIE145TC-W22	$1,073	I1	62	1.25	2.76	86.5	13.358	460	
		1200	182/4TC	00212ST3QIE184TC-W22	$1,428	I1	117	1.25	3.22	88.5	15.860	460	
		900	213/5TC	00209ST3QIE213TC-W22	$2,781	I1	185	1.25	3.39	85.5	19.517	460	
3	2.2	3600	182/4TC	00336ST3QIE182TC-W22	$1,332	I1	113	1.25	3.63	86.5	15.860	460	
		1800	182/4TC	00318ST3QIE182TC-W22	$1,289	I1	109	1.25	3.91	89.5	15.860	460	
		1200	213/5TC	00312ST3QIE213TC-W22	$1,617	I1	178	1.25	4.41	89.5	19.517	460	
		900	213/5TC	00309ST3QIE215TC-W22	$2,963	I1	181	1.25	4.55	85.5	19.517	460	
5	3.7	3600	182/4TC	00536ST3QIE184TC-W22	$1,494	I1	120	1.25	5.90	88.5	15.860	460	
		1800	182/4TC	00518ST3QIE184TC-W22	$1,436	I1	119	1.25	6.45	89.5	15.860	460	
		1200	213/5TC	00512ST3QIE215TC-W22	$1,981	I1	194	1.25	6.83	89.5	19.517	460	
		900	254/6TC	00509ST3QIE254TC-W22	$4,363	I1	309	1.25	7.58	87.5	24.945	460	
7.5	5.5	3600	213/5TC	00736ST3QIE213TC-W22	$1,831	I1	177	1.25	8.76	89.5	19.517	460	
		1800	213/5TC	00718ST3QIE213TC-W22	$1,726	I1	189	1.25	9.18	91.7	19.517	460	
		1200	254/6TC	00712ST3QIE254TC-W22	$2,664	I1	325	1.25	9.48	91.0	24.945	460	
		900	254/6TC	00709ST3QIE256TC-W22	$5,160	I1	321	1.25	11.1	87.5	24.945	460	
10	7.5	3600	213/5TC	01036ST3QIE215TC-W22	$2,000	I1	195	1.25	11.6	90.2	19.517	460	
		1800	213/5TC	01018ST3QIE215TC-W22	$1,840	I1	203	1.25	12.4	91.7	19.517	460	
		1200	254/6TC	01012ST3QIE256TC-W22	$2,954	I1	340	1.25	12.9	91.0	24.945	460	
		900	284/6TC	01009ST3QIE284TC-W22	$6,136	I1	400	1.25	13.4	90.2	27.929	460	
15	11	3600	254/6TC	01536ST3QIE254TC-W22	$2,548	I1	306	1.25	17.2	91.0	24.945	460	
		1800	254/6TC	01518ST3QIE254TC-W22	$2,377	I1	355	1.25	18.0	92.4	24.945	460	
		1200	284/6TC	01512ST3QIE284TC-W22	$4,403	I1	434	1.25	17.9	91.7	27.929	460	
		900	284/6TC	01509ST3QIE286TC-W22	$6,942	I1	444	1.25	19.4	90.2	27.929	460	
20	15	3600	254/6TC	02036ST3QIE256TC-W22	$3,077	I1	332	1.25	23.2	91.0	24.945	460	
		1800	254/6TC	02018ST3QIE256TC-W22	$2,717	I1	404	1.25	24.1	93.0	24.945	460	
		1200	284/6TC	02012ST3QIE286TC-W22	$4,973	I1	465	1.25	24.2	91.7	27.929	460	
		900	324/6TC	02009ST3QIE324TC-W22	$8,494	I1	482	1.25	28.3	91.0	31.116	460	
25	18.5	3600	284/6TSC	02536ST3QIE284TSC-W2	$3,568	I1	389	1.25	28.5	91.7	26.557	460	
		1800	284/6TC	02518ST3QIE284TC-W22	$3,126	I1	456	1.25	29.5	93.6	27.929	460	
		1200	324/6TC	02512ST3QIE324TC-W22	$5,436	I1	603	1.25	30.4	93.0	31.116	460	
		900	324/6TC	02509ST3QIE326TC-W22	$9,063	I1	539	1.25	35.9	91.0	31.116	460	
30	22	3600	284/6TSC	03036ST3QIE286TSC-W2	$3,999	I1	441	1.25	33.8	91.7	26.557	460	
		1800	284/6TC	03018ST3QIE286TC-W22	$3,709	I1	493	1.25	35.1	93.6	27.929	460	
		1200	324/6TC	03012ST3QIE326TC-W22	$5,584	I1	646	1.25	35.8	93.0	31.116	460	
		900	364/5TC	03009ST3QIE364TC-W22	$13,524	I1	917	1.25	37.0	92.4	34.251	460	

continued on next page

Please refer to inside back cover for description of "NOTES"

For detailed specifications, data sheets, drawings and performance curves visit http://www.weg.net

Data subject to change without notice.

TEFC - C-Face - Foot Mount - *continued*

HP	kW	RPM	Frame	Catalog Number	List Price	Mult. Symbol	Approx. Shipping Weight (lbs)	Service Factor	FL Amps @ High	FL. Eff (%)	"C" Dimension (in)	Voltage (V)	Notes
40	30	3600	324/6TSC	04036ST3QIE324TSC-W2	$5,531	I1	602	1.25	45.8	92.4	29.616	460	
		1800	324/6TC	04018ST3QIE324TC-W22	$4,917	I1	633	1.25	47.1	94.1	31.116	460	
		1200	364/5TC	04012ST3QIE364TC-W22	$9,011	I1	1032	1.25	46.5	94.1	34.251	460	
		900	364/5TC	04009ST3QIE365TC-W22	$15,284	I1	990	1.25	50.3	92.4	34.251	460	
50	37	3600	324/6TSC	05036ST3QIE326TSC-W2	$6,195	I1	627	1.25	56.1	93.0	29.616	460	
		1800	324/6TC	05018ST3QIE326TC-W22	$5,458	I1	651	1.25	59.2	94.5	31.116	460	
		1200	364/5TC	05012ST3QIE365TC-W22	$9,744	I1	983	1.25	57.4	94.1	34.251	460	
		900	404/5TC	05009ST3QIE404TC-W22	$19,856	I1	1132	1.25	60.0	93.0	39.730	460	
60	45	1200	404/5TC	06012ST3QIE404TC-W22	$12,315	I1	1156	1.25	69.5	94.5	39.730	460	

TEFC - C-Face - Footless

HP	kW	RPM	Frame	Catalog Number	List Price	Mult. Symbol	Approx. Shipping Weight (lbs)	Service Factor	FL Amps @ High	FL. Eff (%)	"C" Dimension (in)	Voltage (V)	Notes
1	0.75	1800	143/5TC	00118ST3QIER143TC-W2	$1,000	I1	54	1.25	1.47	85.5	14.066	460	15
1.5	1.1	1800	143/5TC	00158ST3QIER145TC-W2	$1,061	I1	62	1.25	2.02	86.5	14.066	460	15
2	1.5	1800	143/5TC	00218ST3QIER145TC-W2	$1,104	I1	63	1.25	2.76	86.5	14.066	460	15
3	2.2	1800	182/4TC	00318ST3QIER182TC-W2	$1,326	I1	110	1.25	3.91	89.5	17.080	460	15,39
5	3.7	1800	182/4TC	00518ST3QIER184TC-W2	$1,478	I1	119	1.25	6.45	89.5	17.080	460	15
7.5	5.5	1800	213/5TC	00718ST3QIER213TC-W2	$1,776	I1	177	1.25	9.18	91.7	21.269	460	15
10	7.5	1800	213/5TC	01018ST3QIER215TC-W2	$1,893	I1	192	1.25	12.4	91.7	21.269	460	15

Please refer to inside back cover for description of "NOTES"

For detailed specifications, data sheets, drawings and performance curves visit http://www.weg.net

Three-Phase General Purpose Motors

BRAKE MOTORS

TEFC - Three-Phase - NEMA Premium®

WEG W22 brake motors consist of an induction motor coupled to a disc brake. Brake is of sturdy construction with few moving parts which guarantees long durability and minimum maintenance.

Standard Features:

- Class F insulation (Impregnation Resin and Magnet wire are class H)
- 230V Brake Rectifier
- F1 Mounted
- Stainless Steel Nameplate - Laser etched with high contrast background
- Regreasable ball bearings (Frames 254T and up)
- 60HZ - 50HZ available with custom build

Note: If separate power supply to the Brake is required, (Such as on Motors operating with Variable Frequency Drive), 230V to the Brake module is standard.

Features that make a difference:

- 1.25 Service Factor
- NPT Threaded terminal box
- Armature type brake
- Manual Release

Inverter Rated:
1000:1 for variable torque
20:1 for constant torque

Optional Feature:
460V brake rectifier is available with motor modification

Brake Torques			
Frame	N.m	lb.ft	Optional lb.ft
143/5T	16	12	17
182/4T	60	44	N/A
213/5T	125	59	92
254/6T	235	111	173
284/6T	400	192	254

Please refer to inside back cover for description of "NOTES"

For detailed specifications, data sheets, drawings and performance curves visit http:// www.weg.net

Data subject to change without notice.

TEFC – Foot Mount

HP	kW	RPM	Frame	Catalog Number	List Price	Mult. Symbol	Approx. Shipping Weight (lbs)	Service Factor	FL Amps @ High	FL. Eff (%)	"C" Dimension (in)	Voltage (V)	Notes
1	0.75	1800	143/5T	00118ET3EBM143T-W22	$1,494	B1	59	1.25	1.47	85.5	16.231	230/460	25
		1800	143/5T	00118ET3HBM143T-W22	$1,494	B1	62	1.25	1.18	85.5	16.231	575	25
		1200	143/5T	00112ET3EBM145T-W22	$1,587	B1	66	1.25	1.73	82.5	16.231	230/460	25
		900	182/4T	00109ET3EBM182T-W22	$2,594	B1	126	1.25	2.30	78.5	19.314	230/460	25
1.5	1.1	3600	143/5T	00156ET3EBM143T-W22	$1,501	B1	73	1.25	1.96	84.0	16.231	230/460	25
		1800	143/5T	00158ET3EBM145T-W22	$1,569	B1	65	1.25	2.02	86.5	16.231	230/460	25
		1200	182/4T	00152ET3EBM182T-W22	$2,264	B1	117	1.25	2.54	87.5	19.314	230/460	25
		900	182/4T	00159ET3EBM184T-W22	$2,703	B1	156	1.25	2.70	82.5	19.314	230/460	25
2	1.5	3600	143/5T	00236ET3EBM145T-W22	$1,501	B1	62	1.25	2.56	85.5	16.231	230/460	25
		1800	143/5T	00218ET3EBM145T-W22	$1,594	B1	66	1.25	2.76	86.5	16.231	230/460	25
		1200	182/4T	00212ET3EBM184T-W22	$2,369	B1	122	1.25	3.23	88.5	19.314	230/460	25
		900	213/5T	00209ET3EBM213T-W22	$3,345	B1	217	1.25	3.39	85.5	23.188	230/460	25
3	2.2	3600	182/4T	00336ET3EBM182T-W22	$2,290	B1	140	1.25	3.63	86.5	19.314	230/460	25
		1800	182/4T	00318ET3EBM182T-W22	$2,052	B1	115	1.25	3.91	89.5	19.314	230/460	25
		1200	213/5T	00312ET3EBM213T-W22	$3,220	B1	196	1.25	4.41	89.5	23.188	230/460	25
		900	213/5T	00309ET3EBM215T-W22	$3,740	B1	259	1.25	4.55	85.5	23.188	230/460	25
5	3.7	3600	182/4T	00536ET3EBM184T-W22	$2,343	B1	126	1.25	5.90	88.5	19.314	230/460	25
		1800	182/4T	00518ET3EBM184T-W22	$2,291	B1	124	1.25	6.45	89.5	19.314	230/460	25
		1800	182/4T	00518ET3HBM184T-W22	$2,291	B1	124	1.25	5.16	89.5	19.314	575	25
		1200	213/5T	00512ET3EBM215T-W22	$3,406	B1	213	1.25	6.83	89.5	23.188	230/460	25
		900	254/6T	00509ET3EBM254T-W22	$5,641	B1	358	1.25	7.58	87.5	29.839	230/460	25
7.5	5.5	3600	213/5T	00736ET3EBM213T-W22	$3,002	B1	200	1.25	8.76	89.5	23.188	230/460	25
		1800	213/5T	00718ET3EBM213T-W22	$2,903	B1	215	1.25	9.18	91.7	23.188	230/460	25
		1200	254/6T	00712ET3EBM254T-W22	$5,172	B1	377	1.25	9.48	91.0	29.839	230/460	25
		900	254/6T	00709ET3EBM256T-W22	$6,415	B1	377	1.25	11.1	87.5	29.839	230/460	25;51
10	7.5	3600	213/5T	01036ET3EBM215T-W22	$3,492	B1	238	1.25	11.6	90.2	23.188	230/460	25;51
		1800	213/5T	01018ET3EBM215T-W22	$3,474	B1	221	1.25	12.4	91.7	23.188	230/460	25
		1800	213/5T	01018ET3HBM215T-W22	$3,474	B1	200	1.25	9.92	91.7	23.188	575	25
		1200	254/6T	01012ET3EBM256T-W22	$5,759	B1	367	1.25	12.9	91.0	29.839	230/460	25
15	11	3600	254/6T	01536ET3EBM254T-W22	$4,745	B1	384	1.25	17.2	91.0	29.839	230/460	25
		1800	254/6T	01518ET3EBM254T-W22	$5,205	B1	407	1.25	18.0	92.4	29.839	230/460	25
		1800	254/6T	01518ET3HBM254T-W22	$5,205	B1	369	1.25	14.4	92.4	29.839	575	25
20	15	3600	254/6T	02036ET3EBM256T-W22	$5,768	B1	424	1.25	23.2	91.0	29.839	230/460	25
		1800	254/6T	02018ET3EBM256T-W22	$5,771	B1	456	1.25	24.1	93.0	29.839	230/460	25
25	18.5	1800	284/6T	02518ET3EBM284T-W22	$6,796	B1	520	1.25	29.5	93.6	32.976	230/460	25
30	22	1800	284/6T	03018ET3EBM286T-W22	$7,276	B1	558	1.25	35.1	93.6	32.976	230/460	25

Please refer to inside back cover for description of "NOTES"

For detailed specifications, data sheets, drawings and performance curves visit http://www.weg.net

ROLLED STEEL BRAKE MOTORS

Spring-Set brake (Solenoid Actuated)

Standard Features:

- 1.15 Service Factor
- Manual Release Lever
- AC brake
- Inverter Rated
- IP55 Enclosure
- Dual Frequency (50/60 Hz)

Applications:

- Conveyors
- Door Operators
- Packaging Equipment
- Unit Handling

Please refer to inside back cover for description of “NOTES”

For detailed specifications, data sheets, drawings and performance curves visit http://www.weg.net

Data subject to change without notice.

TEFC - Foot Mount

HP	kW	RPM	Frame	Catalog Number	List Prie	Mult Symbol	Approx. Shipping Weight (lbs)	Brake Torque (ft.lb)	FL. Amps @ High	FL. Eff (%)	"C" Dimension (in)	Volts	Notes
0.25	0.18	1800	W56	.2518ES3EBMW56-S	$928	RSB	24	3	0.50	66.0	14.610	208-230/460	9
0.33	0.25	1800	W56	.3318ES3EBMW56-S	$977	RSB	26	3	0.66	68.0	14.610	208-230/460	9
0.5	0.37	1800	W56	.5018ES3EBMW56-S	$1,105	RSB	27	3	1.00	72.0	15.004	208-230/460	9
0.75	0.55	1800	W56	.7518ES3EBMW56-S	$1,301	RSB	38	6	1.22	75.5	15.397	208-230/460	9
1	0.75	1800	56	00118ET3EBM56-S	$1,504	RSB	54	6	1.47	85.5	17.835	230/460	9
		1800	143T	00118ET3EBM143T-S	$1,729	RSB	55	6	1.47	85.5	17.914	230/460	9
1.5	1.1	1800	145T	00158ET3EBM145T-S	$1,866	RSB	56	10	2.02	86.5	17.914	230/460	9
2	1.5	1800	145T	00218ET3EBM145T-S	$1,921	RSB	60	10	2.72	86.5	18.307	230/460	9
3	2.2	1800	182T	00318ET3EBM182T-S	$2,117	RSB	113	15	3.81	89.5	22.992	230/460	9
5	3.7	1800	184T	00518ET3EBM184T-S	$2,492	RSB	91	25	6.49	89.5	22.992	230/460	9
7.5	5.5	1800	213T	00718ET3EBM213T-S	$4,563	RSB	151	35	9.07	91.7	26.457	230/460	9
10	7.5	1800	215T	01018ET3EBM215T-S	$4,989	RSB	165	50	12.2	91.7	26.850	230/460	9
15	11	1800	254T	01518ET3EBM254T-S	$6,985	RSB	256	75	18.2	92.4	31.220	230/460	9
20	15	1800	256T	02018ET3EBM256T-S	$9,080	RSB	291	100	24.7	93.0	32.007	230/460	9

TEFC - C-Face - Foot Mount

HP	kW	RPM	Frame	Catalog Number	List Price	Mult Symbol	Approx. Shipping Weight (lbs)	Brake Torque (ft.lb)	FL. Amps @ High	FL. Eff (%)	"C" Dimension (in)	Volts	Notes
1	0.75	1800	56C	00118ET3EBM56C-S	$1,542	RSB	54	6	1.47	85.5	17.835	230/460	9
		1800	143TC	00118ET3EBM143TC-S	$1,767	RSB	55	6	1.47	85.5	17.914	230/460	9
1.5	1.1	1800	145TC	00158ET3EBM145TC-S	$1,904	RSB	56	10	2.02	86.5	17.914	230/460	9
2	1.5	1800	145TC	00218ET3EBM145TC-S	$1,959	RSB	60	10	2.72	86.5	18.307	230/460	9
3	2.2	1800	182TC	00318ET3EBM182TC-S	$2,189	RSB	113	15	3.81	89.5	22.992	230/460	9
5	3.7	1800	184TC	00518ET3EBM184TC-S	$2,564	RSB	91	25	6.49	89.5	22.992	230/460	9
7.5	5.5	1800	213TC	00718ET3EBM213TC-S	$4,702	RSB	151	35	9.07	91.7	26.457	230/460	9
10	7.5	1800	215TC	01018ET3EBM215TC-S	$5,128	RSB	165	50	12.2	91.7	26.850	230/460	9

TEFC - C-Face - Footless

HP	kW	RPM	Frame	Catalog Number	List Price	Mult Symbol	Approx. Shipping Weight (lbs)	Brake Torque (ft.lb)	FL. Amps @ High	FL. Eff (%)	"C" Dimension (in)	Volts	Notes
0.25	0.18	1800	W56C	.2518ES3EBMW56CFL-S	$966	RSB	24	3	0.50	66.0	14.610	208-230/460	9
0.33	0.25	1800	W56C	.3318ES3EBMW56CFL-S	$1,015	RSB	26	3	0.66	68.0	14.610	208-230/460	9
0.5	0.37	1800	W56C	.5018ES3EBMW56CFL-S	$1,143	RSB	27	3	1.00	72.0	15.004	208-230/460	9
0.75	0.55	1800	W56C	.7518ES3EBMW56CFL-S	$1,339	RSB	38	6	1.22	75.5	15.397	208-230/460	9
1	0.75	1800	56C	00118ET3EBM56CFL-S	$1,542	RSB	54	6	1.47	85.5	18.165	230/460	9
		1800	143TC	00118ET3EBMR143TC-S	$1,767	RSB	55	6	1.47	85.5	18.244	230/460	9
1.5	1.1	1800	56C	00158ET3EBM56CFL-S	$1,856	RSB	55	10	2.02	86.5	18.165	230/460	9
		1800	145TC	00158ET3EBMR145TC-S	$1,904	RSB	56	10	2.02	86.5	18.244	230/460	9
2	1.5	1800	56C	00218ET3EBM56CFL-S	$1,925	RSB	59	10	2.72	86.5	18.559	230/460	9
		1800	145TC	00218ET3EBMR145TC-S	$1,959	RSB	60	10	2.72	86.5	18.637	230/460	9
3	2.2	1800	182TC	00318ET3EBMR182TC-S	$2,189	RSB	113	15	3.81	89.5	22.858	230/460	9
5	3.7	1800	184TC	00518ET3EBMR184TC-S	$2,564	RSB	91	25	6.49	89.5	22.992	230/460	9
7.5	5.5	1800	213TC	00718ET3EBMR213TC-S	$4,702	RSB	151	35	9.07	91.7	26.457	230/460	9
10	7.5	1800	215TC	01018ET3EBMR215TC-S	$5,128	RSB	165	50	12.2	91.7	26.850	230/460	9

Please refer to inside back cover for description of "NOTES"

For detailed specifications, data sheets, drawings and performance curves visit http://www.weg.net

PERMANENT MAGNET MOTORS

W23 Sync+

Ultra Premium IE5 Efficiency

TEFC

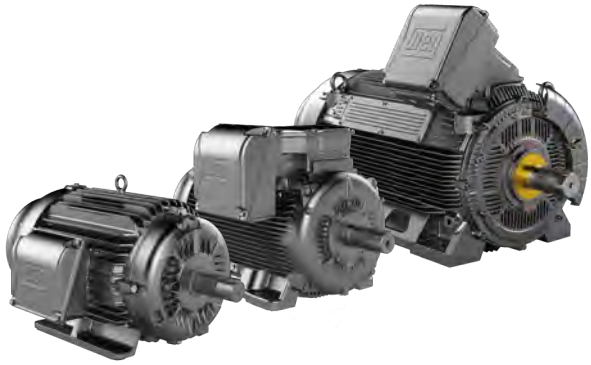

WEG's W23 Sync+ Permanent Magnet motors are designed to be the most efficient motors available to fit standard NEMA and IEC frame sizes and meet the requirements of diverse demanding applications requiring wide Speed ranges and high efficiency. The W23 Sync+ utilises permanent magnets optimized for performance and cost. Ferrite Magnets combined with Synchronous Reluctance designs offer optimized designs on 100HP and Smaller ratings while powerful rare earth magnets (NdFeB), are used on larger sizes
WEG's W22 cast iron platform has a superior cooling system and solid feet for cool operation and lower vibration and noise extending the life of the motor.

Standard Features:

- Class F insulation (Impregnation Resin and magnet wire are class H)
- Stainless Steel Nameplate - Laser etched with high contrast background
- Shaft grounding inside -Standard
- Frames 254T+ with regreasable ball bearings
- Ultra Premium in same frame as NEMA Premium for maximum energy savings
- Reduced bearing temperatures for longer lubrication life
- Super Premium (IE4) available in a reduced frame for size and weight reduction
- Flat efficiency curves for extra savings at partial loads
- Match with WEG CFW500 & 900 drive for optimal performance package

Features that make a difference:

- Insulated ODE bearing hub on frames 405T+
- Internal Shaft Grounding Standard
- Bearing protection meets IP55
- Rubber lead separator between terminal box and frame
- Vibration: 0.04 inches per second or less
- Bearing life 100,000 hours (L-10) (Coupled)
- Maintains high Efficiency over wide Speed/load range
- Non-sparking fan
- Inverter Rated: -Exceed NEMA MG 1 Part 31 insulation
- Matched to WEG CFW500 and CFW900 VFD's

Please refer to inside back cover for description of "NOTES"

TEFC – Foot Mount

HP	kW	RPM	Frame	Catalog Number	List Price	Mult. Symbol	Approx. Shipping Weight (lbs)	Service Factor	FL Amps @ High	FL. Eff (%)	"C" Dimension (in)	Voltage (V)	Notes
1	0.75	3600	143/5T	00136EU3E143T-SYNC	$866	SYN	37	1	1.29	86.3	13.4	230/460	
		1800	143/5T	00118EU3E143T-SYNC	$851	SYN	40	1	1.27	88.2	13.4	230/460	
		1200	143/5T	00112EU3E145T-SYNC	961	SYN	47	1	1.3	85.7	13.4	230/460	
1.5	1.1	3600	143/5T	00156EU3E143T-SYNC	$873	SYN	37	1	1.93	87.8	13.4	230/460	
		1800	143/5T	00158EU3E145T-SYNC	$884	SYN	47	1	1.87	89.5	13.4	230/460	
		1200	182/4T	00152EU3E182T-SYNC	$1,188	SYN	77	1	2.14	87.2	15.9	230/460	
2	1.5	3600	143/5T	00236EU3E145T-SYNC	$938	SYN	40	1	2.58	88.9	13.4	230/460	
		1800	143/5T	00218EU3E145T-SYNC	$966	SYN	49	1	2.54	90.4	13.4	230/460	
		1200	182/4T	00212EU3E184T-SYNC	$1,276	SYN	86	1	2.89	88.4	15.9	230/460	
3	2.2	3600	182/4T	00336EU3E182T-SYNC	$1,200	SYN	73	1	4.17	90.2	15.9	230/460	
		1800	182/4T	00318EU3E182T-SYNC	$1,085	SYN	85	1	4.14	91.4	15.9	230/460	
		1200	213/5T	00312EU3E213T-SYNC	$1,724	SYN	121	1	3.97	89.7	19.5	230/460	
5	3.7	3600	182/4T	00536EU3E184T-SYNC	$1,349	SYN	78	1	6.93	89.7	15.9	230/460	
		1800	182/4T	00518EU3E184T-SYNC	$1,235	SYN	95	1	7	92.6	15.9	230/460	
		1200	213/5T	00512EU3E215T-SYNC	$1,998	SYN	143	1	6.35	91.2	19.5	230/460	
7.5	5.5	3600	213/5T	00736EU3E213T-SYNC	$1,719	SYN	121	1	8.98	92.6	19.5	230/460	
		1800	213/5T	00718EU3E213T-SYNC	$1,703	SYN	131	1	9.36	93.4	19.5	230/460	
		1200	254/6T	00712EU3E254T-SYNC	$3,068	SYN	225	1	9.4	92.2	25.7	230/460	39
10	7.5	3600	213/5T	01036EU3E215T-SYNC	$1,998	SYN	141	1	11.87	93.3	19.5	230/460	
		1800	213/5T	01018EU3E215T-SYNC	$1,957	SYN	152	1	12.68	94	19.5	230/460	
		1200	254/6T	01012EU3E256T-SYNC	$3,515	SYN	276	1	12.5	92.9	25.7	230/460	39
15	11	3600	254/6T	01536EU3E254T-SYNC	$2,742	SYN	247	1	17.49	94	25.7	230/460	39
		1800	254/6T	01518EU3E254T-SYNC	$2,775	SYN	298	1	18.23	94.6	25.7	230/460	39
		1200	284/6T	01512EU3E284T-SYNC	$4,753	SYN	353	1	19.2	93.7	27.9	230/460	39
20	15	3600	254/6T	02036EU3E256T-SYNC	$3,496	SYN	280	1	22.64	94.5	25.7	230/460	39
		1800	254/6T	02018EU3E256T-SYNC	$3,251	SYN	315	1	25.06	95.1	25.7	230/460	39
		1200	284/6T	02012EU3E286T-SYNC	$5,659	SYN	375	1	26.6	94.3	27.9	230/460	39
25	18.5	3600	284/6TS	02536EU3E284TS-SYNC	$4,357	SYN	353	1	30.5	94.9	27.9	230/460	39
		1800	284/6T	02518EU3E284T-SYNC	$4,013	SYN	392	1	30.5	95.3	27.9	230/460	39
		1200	324/6T	02512EU3E324T-SYNC	$6,795	SYN	470	1	33.4	94.6	29.6	230/460	39
30	22	3600	284/6TS	03036EU3E286TS-SYNC	$5,117	SYN	359	1	36.5	95.1	27.9	230/460	39
		1800	284/6T	03018EU3E286T-SYNC	$4,661	SYN	432	1	37.5	95.5	27.9	230/460	39
		1200	324/6T	03012EU3E326T-SYNC	$7,519	SYN	498	1	39.9	94.9	29.6	230/460	39
40	30	3600	324/6TS	04036EU3Q324TS-SYNC	$6,779	SYN	470	1	52.3	95.5	29.6	460	39
		1800	324/6T	04018EU3E324T-SYNC	$6,040	SYN	518	1	52.5	95.9	29.6	230/460	39
		1200	364/5T	04012EU3E364T-SYNC	$10,673	SYN	785	1	52.7	95.3	34.2	230/460	39
50	37	3600	324/6TS	05036EU3Q326TS-SYNC	$7,577	SYN	522	1	63.8	95.8	29.6	460	39
		1800	324/6T	05018EU3E326T-SYNC	$7,285	SYN	567	1	66	96.1	29.6	230/460	39
		1200	364/5T	05012EU3E365T-SYNC	$12,339	SYN	851	1	63.5	95.6	34.2	230/460	39
60	45	3600	364/5TS	06036EU3Q364TS-SYNC	$11,035	SYN	752	1	75.2	96	34.2	460	39
		1800	364/5T	06018EU3E364T-SYNC	$10,815	SYN	818	1	81.5	96.3	34.2	230/460	39
		1200	404/5T	06012EU3E404T-SYNC	$15,371	SYN	1041	1	81.5	95.8	37.6	230/460	39,43

continued on next page

Please refer to inside back cover for description of "NOTES"

For detailed specifications, data sheets, drawings and performance curves visit http://www.weg.net

PERMANENT MAGNET MOTORS

TEFC – Foot Mount - cont.

HP	kW	RPM	Frame	Catalog Number	List Price	Mult. Symbol	Approx. Shipping Weight (lbs)	Service Factor	FL Amps @ High	FL. Eff (%)	"C" Dimension (in)	Voltage (V)	Notes
75	55	3600	364/5TS	07536EU3Q365TS-SYNC	$13,113	SYN	818	1	90	96.2	34.2	460	39
		1800	364/5T	07518EU3E365T-SYNC	$12,592	SYN	915	1	94.5	96.5	34.2	230/460	39
		1200	404/5T	07512EU3E405T-SYNC	$17,478	SYN	1120	1	100	96	37.6	230/460	39,43
100	75	3600	404/5TS	10036EU3Q405TS-SYNC	$17,403	SYN	882	1	140	96.5	37.6	460	39,43
		1800	404/5T	10018EU3Q405T-SYNC	$16,980	SYN	1080	1	135	96.7	37.6	460	39,43
		1200	444/5T	10012EU3E444T-SYNC	$22,652	SYN	1268	1	105	96.3	39.2	230/460	43
125	90	3600	444/5TS	12536EU3Q444TS-SYNC	$22,273	SYN	926	1	165	96.6	39.2	460	43
		1800	444/5T	12518EU3Q444T-SYNC	$21,460	SYN	1268	1	125	96.8	39.2	460	43
		1200	444/5T	12512EU3Q445T-SYNC	$25,778	SYN	1268	1	128	96.5	39.2	460	43
150	110	3600	444/5TS	15036EU3Q445TS-SYNC	$27,041	SYN	1014	1	198	96.8	39.2	460	43
		1800	444/5T	15018EU3Q445T-SYNC	$25,067	SYN	1323	1	152	97	39.2	460	43
		1200	445/7T	15012EU3Q447T-SYNC	$29,413	SYN	1402	1	158	96.6	45.0	460	43
200	150	3600	445/7TS	20036EU3Q447TS-SYNC	$33,359	SYN	1250	1	215	97	45.0	460	43
		1800	445/7T	20018EU3Q447T-SYNC	$30,032	SYN	1543	1	210	97.2	45.0	460	43
		1200	447/9T	20012EU3Q449T-SYNC	$35,644	SYN	1590	1	210	96.9	56.3	460	43

Please refer to inside back cover for description of "NOTES"

For detailed specifications, data sheets, drawings and performance curves visit http://www.weg.net

Data subject to change without notice.

Three-Phase General Purpose Motors

IEC TRU-METRIC™ - Three Phase

W22 Cast Iron

Aluminum

TEFC

This line is designed and built according to European IEC34 and IEC79 standards.

Standard Features:

- 60 Hz (1.15 Service Factor) and 50 Hz (1.0 Service Factor)
- Class F insulation (Impregnation Resin and Magnet wire are class H)
- F2 mounted as standard (F1 convertible)
- Stainless Steel Nameplate - Laser etched with High contrast background
- Regreasable ball bearings (Frames 160 and up)
- Gasketed conduit box
- Class I, Div. 2, Groups A, B, C & D – T3, Class II, Div 2, Groups F & G – T3C (Cast Iron Frames only)
- Suitable for WYE/Delta Start (W and Y voltage code motors)

Features that make a difference:

- 1.25 Service Factor for 60 Hz operation (IE3)
- Optimized ventilation system for cooler operation and lower noise levels
- Solid base for lower vibration levels (Cast Iron Frames)
- Frames 225 and up can easily be F1 (B3L) converted by rotating the terminal box adapter or F3 by removing it
- Aluminum frames have removable feet for easy F1, F2 and F3 (B3L, B3R, B3T) conversion
- Terminal blocks

***Inverter Rated:**
1000:1 for variable torque
12:1 for constant torque
Excludes 660-690V

** Insulated NDE bearing housing standard on 315L and above*

Data subject to change without notice.

Three-Phase General Purpose Motors

IEC TRU-Metric™

TEFC - Foot Mount

HP	kW	RPM	Frame	Catalog Number	List Price	Mult. Symbol	Approx. Shipping Weight (lbs)	Service Factor	FL Amps @ High	FL. Eff (%)	"C" Dimension (in)	Voltage (V)	Notes
0.25	0.18	3600//3000	63	.1836EP3EAL63-W22	$280	T1	14	1.15	0.48	68.0	8.504	230/460//190/380	2,7
		1800//1500	63	.1818EP3EAL63-W22	$267	T1	16	1.15	0.51	69.0	8.504	230/460//190/380	2,7
		1200//1000	71	.1812EP3EAL71-W22	$338	T1	22	1.15	0.77	61.0	9.764	230/460//190/380	2,7
		900//750	80	.1809EP3EAL80-W22	$540	T1	30	1.15	0.80	50.5	10.866	230/460//190/380	2,7
		900//750	80	.1809EP3WAL80-W22	$540	T1	28	1.15	0.80	50.5	10.866	460//220-240/380-415	2,7
0.33	0.25	3600//3000	63	.2536EP3EAL63-W22	$286	T1	16	1.15	0.62	70.0	8.504	230/460//190/380	2,7
		1800//1500	71	.2518EP3EAL71-W22	$282	T1	24	1.15	0.68	73.0	9.764	230/460//190/380	2,7
		1200//1000	71	.2512EP3EAL71-W22	$363	T1	24	1.15	1.00	64.0	9.764	230/460//190/380	2,7
		900//750	80	.2509EP3EAL80-W22	$583	T1	29	1.15	0.87	57.5	10.866	230/460//190/380	2,7
		900//750	80	.2509EP3WAL80-W22	$583	T1	32	1.15	0.87	57.5	10.866	460//220-240/380-415	2,7
0.5	0.37	3600//3000	71	.3736EP3EAL71-W22	$309	T1	22	1.15	0.83	73.0	9.764	230/460//190/380	2,7
		1800//1500	71	.3718EP3EAL71-W22	$290	T1	24	1.15	1.06	73.0	9.764	230/460//190/380	2,7
		1200//1000	80	.3712EP3EAL80-W22	$378	T1	27	1.15	1.07	64.0	10.866	230/460//190/380	2,7
		900//750	90S/L	.3709EP3EAL90S-W22	$662	T1	40	1.15	1.35	61.5	12.953	230/460//190/380	2,7
		900//750	90S/L	.3709EP3WAL90S/L-W22	$662	T1	40	1.15	1.35	61.5	12.953	460//220-240/380-415	2,7
0.75	0.55	3600//3000	71	.5536EP3EAL71-W22	$316	T1	23	1.15	1.14	76.0	9.764	230/460//190/380	2,7
		1800//1500	80	.5518EP3EAL80-W22	$333	T1	28	1.15	1.25	77.0	10.866	230/460//190/380	2,7
		1200//1000	80	.5512EP3EAL80-W22	$405	T1	32	1.15	1.63	66.0	10.866	230/460//190/380	2,7
		900//750	90S/L	.5509EP3EAL90L-W22	$696	T1	46	1.15	2.12	62.5	12.953	230/460//190/380	2,7
		900//750	90S/L	.5509EP3WAL90S/L-W22	$696	T1	58	1.15	2.12	62.5	12.953	460//220-240/380-415	2,7
1	0.75	3600//3000	80	.7536ET3WAL80-W22	$397	T1	27	1.25	1.43	81.5	10.866	460//220-240/380-415	2,7
		1800//1500	90S/L	.7518ET3EAL90S/L-W22	$420	T1	42	1.25	1.47	85.5	12.953	230/460//190/380	2,7
		1800//1500	90S/L	.7518ET3WAL90S/L-W22	$420	T1	43	1.25	1.47	85.5	12.953	460//220-240/380-415	2,7
		1200//1000	90S/L	.7512ET3EAL90S-W22	$537	T1	47	1.25	1.68	82.5	12.953	230/460//190/380	2,7
		1200//1000	90S/L	.7512ET3WAL90S-W22	$537	T1	51	1.25	1.68	82.5	12.953	460//220-240/380-415	2,7
		900//750	100L	.7509ET3EAL100L-W22	$869	T1	68	1.25	2.11	75.5	14.803	230/460//190/380	2,7
1.5	1.1	3600//3000	80	00136ET3EAL80-W22	$444	T1	29	1.25	2.03	84.0	10.866	230/460//190/380	2,7
		3600//3000	80	00136ET3WAL80-W22	$444	T1	30	1.25	2.03	84.0	10.866	460//220-240/380-415	2,7
		1800//1500	90S/L	00118ET3EAL90S-W22	$470	T1	44	1.25	2.05	86.5	12.953	230/460//190/380	2,7
		1800//1500	90S/L	00118ET3WAL90S-W22	$470	T1	44	1.25	2.05	86.5	12.953	460//220-240/380-415	2,7
		1200//1000	100L	00112ET3EAL100L-W22	$746	T1	80	1.00	2.32	87.5	14.803	230/460//190/380	2,7
2	1.5	3600//3000	90S/L	00156ET3EAL90S-W22	$504	T1	44	1.25	2.69	85.5	12.953	230/460//190/380	2,7
		3600//3000	90S/L	00156ET3WAL90S-W22	$504	T1	44	1.25	2.69	85.5	12.953	460//220-240/380-415	2,7
		1800//1500	90S/L	00158ET3EAL90L-W22	$524	T1	49	1.25	2.79	86.5	12.953	230/460//190/380	2,7
		1800//1500	90S/L	00158ET3WAL90L-W22	$524	T1	49	1.25	2.79	86.5	12.953	460//220-240/380-415	2,7
		1800/1500	90L	00158ET3W90L-W22	$537	T1	55	1.25	2.83	86.5	12.953	460//220-240/380-415	7
		1200//1000	100L	00152ET3WAL100L-W22	$812	T1	76	1.25	3.13	88.5	16.535	460//220-240/380-415	2,7
		1200//1000	112M	00152ET3EAL112M-W22	$923	T1	93	1.25	3.08	88.5	15.472	230/460//190/380	2,7,51
		1200//1000	112M	00152ET3WAL112M-W22	$923	T1	93	1.25	3.08	88.5	15.472	460//220-240/380-415	2,7,51
		900//750	112M	00159ET3YAL112M-W22	$1,001	T1	90	1.25	3.50	84.0	15.472	460//380-415/660-690	2,7
3	2.2	3600//3000	90S/L	00236ET3EAL90L-W22	$756	T1	50	1.25	3.85	86.5	12.953	230/460//190/380	2,7
		3600//3000	90S/L	00236ET3WAL90L-W22	$756	T1	49	1.25	3.85	86.5	12.953	460//220-240/380-415	2,7
		1800//1500	100L	00218ET3EAL100L-W22	$630	T1	66	1.25	4.11	89.5	14.803	230/460//190/380	2,7
		1800//1500	100L	00218ET3WAL100L-W22	$630	T1	66	1.25	4.11	89.5	14.803	460//220-240/380-415	2,7
		1800/1500	100L	00218ET3W100L-W22	$645	T1	78	1.25	4.11	89.5	14.803	460//220-240/380-415	7
		1200//1000	132S	00212ET3EAL132S-W22	$1,166	T1	131	1.25	4.41	89.5	19.291	230/460//190/380	2,7
		1200//1000	132S	00212ET3YAL132S-W22	$1,166	T1	136	1.25	4.41	89.5	19.291	460//380-415/660-690	2,7
		900//750	132S	00209ET3YAL132S-W22	$1,412	T1	145	1.25	4.75	85.5	19.291	460//380-415/660-690	2,7

continued on next page

Please refer to inside back cover for description of "NOTES"

For detailed specifications, data sheets, drawings and performance curves visit http:// www.weg.net

Data subject to change without notice.

TEFC - Foot Mount - *continued*

HP	kW	RPM	Frame	Catalog Number	List Price	Mult. Symbol	Approx. Shipping Weight (lbs)	Service Factor	FL Amps @ High	FL. Eff (%)	"C" Dimension (in)	Voltage (V)	Notes
4	3	3600//3000	100L	00336ET3EAL100L-W22	$805	T1	65	1.25	5.01	88.5	14.803	230/460//190/380	2,7
		3600//3000	100L	00336ET3WAL100L-W22	$805	T1	65	1.25	5.01	88.5	14.803	460//220-240/380-415	2,7
		1800//1500	100L	00318ET3EAL100L-W22	$672	T1	77	1.25	5.33	89.5	14.803	230/460//190/380	2,7
		1800//1500	100L	00318ET3WAL100L-W22	$672	T1	77	1.25	5.33	89.5	14.803	460//220-240/380-415	2,7
		1200//1000	132M	00312ET3EAL132M-W22	$1,247	T1	137	1.25	6.01	89.5	19.291	230/460//190/380	2,7
		1200//1000	132M	00312ET3YAL132M-W22	$1,247	T1	147	1.25	6.01	89.5	19.291	460//380-415/660-690	2,7
		900//750	132M	00309ET3EAL132M-W22	$1,610	T1	193	1.25	6.29	85.5	19.291	230/460//190/380	2,7
		900//750	132M	00309ET3YAL132M-W22	$1,610	T1	156	1.25	6.29	85.5	19.291	460//380-415/660-690	2,7
5.5	4	3600//3000	112M	00436ET3EAL112M-W22	$874	T1	86	1.25	6.67	88.5	15.472	230/460//190/380	2,7
		3600//3000	112M	00436ET3YAL112M-W22	$874	T1	86	1.25	6.67	88.5	15.472	460//380-415/660-690	2,7
		1800//1500	112M	00418ET3EAL112M-W22	$679	T1	93	1.25	7.28	89.5	15.472	230/460//190/380	2,7
		1800//1500	112M	00418ET3YAL112M-W22	$679	T1	93	1.25	7.28	89.5	15.472	460//380-415/660-690	2,7
		1200//1000	132M	00412ET3EAL132M-W22	$1,254	T1	147	1.25	7.90	89.5	19.291	230/460//190/380	2,7
		1200//1000	132M	00412ET3YAL132M-W22	$1,254	T1	147	1.25	7.90	89.5	19.291	460//380-415/660-690	2,7
		900//750	160M	00409ET3Y160M-W22	$1,947	T1	299	1.25	8.17	86.5	23.543	460//380-415/660-690	7
7.5	5.5	3600//3000	132S	00536ET3EAL132S-W22	$1,144	T1	136	1.25	8.97	89.5	19.291	230/460//190/380	2,7
		3600//3000	132S	00536ET3YAL132S-W22	$1,144	T1	136	1.25	8.97	89.5	19.291	460//380-415/660-690	2,7
		1800//1500	132S	00518ET3EAL132S-W22	$932	T1	142	1.25	9.07	91.7	19.291	230/460//190/380	2,7
		1800//1500	132S	00518ET3YAL132S-W22	$932	T1	142	1.25	9.07	91.7	19.291	460//380-415/660-690	2,7
		1800/1500	132S	00518ET3Y132S-W22	$953	T1	161	1.25	9.07	91.7	19.291	460//380-415	7
		1200//1000	132M/L	00512ET3Y132M/L-W22	$1,760	T1	206	1.25	10.8	91.0	20.276	460//380-415/660-690	7
		900//750	160M	00509ET3Y160M-W22	$2,244	T1	306	1.25	11.1	87.5	23.543	460//380-415/660-690	7
10	7.5	3600//3000	132S	00736ET3EAL132S-W22	$1,292	T1	148	1.25	12.3	90.2	19.291	230/460//190/380	2,7
		3600//3000	132S	00736ET3YAL132S-W22	$1,292	T1	147	1.25	12.3	90.2	19.291	460//380-415/660-690	2,7
		1800//1500	132M	00718ET3EAL132M-W22	$1,110	T1	159	1.25	12.2	91.7	19.291	230/460//190/380	2,7
		1800//1500	132M	00718ET3YAL132M-W22	$1,110	T1	159	1.25	12.2	91.7	19.291	460//380-415/660-690	2,7
		1800/1500	132M	00718ET3Y132M-W22	$1,135	T1	186	1.25	12.4	91.7	19.291	460//380-415	7
		1200//1000	160M	00712ET3Y160M-W22	$2,306	T1	306	1.25	13.1	91.0	23.543	460//380-415/660-690	7
		900//750	160L	00709ET3Y160L-W22	$2,774	T1	352	1.25	15.2	88.5	25.276	460//380-415/660-690	7
15	11	3600//3000	160M	01136ET3Y160M-W22	$2,102	T1	304	1.25	17.9	91.7	23.543	460//380-415/660-690	7
		1800//1500	160M	01118ET3Y160M-W22	$1,726	T1	321	1.25	18.2	92.4	23.543	460//380-415/660-690	7
		1200//1000	160L	01112ET3Y160L-W22	$3,160	T1	354	1.25	18.8	91.7	25.276	460//380-415/660-690	7
		900//750	180L	01109ET3Y180L-W22	$4,031	T1	419	1.25	19.5	89.5	27.638	460//380-415/660-690	7
20	15	3600//3000	160M	01536ET3Y160M-W22	$2,413	T1	320	1.25	24.4	91.7	23.543	460//380-415/660-690	7
		1800//1500	160L	01518ET3Y160L-W22	$2,118	T1	375	1.25	25.0	93.0	25.276	460//380-415/660-690	7
		1200//1000	180L	01512ET3Y180L-W22	$3,884	T1	447	1.25	24.7	91.7	27.638	460//380-415/660-690	7
		900//750	200L	01509ET3Y200L-W22	$5,158	T1	517	1.25	28.0	91.0	30.197	460//380-415/660-690	7
25	18.5	3600//3000	160L	01836ET3Y160L-W22	$2,925	T1	353	1.25	29.9	92.4	25.276	460//380-415/660-690	7
		1800//1500	180M	01818ET3Y180M-W22	$2,689	T1	436	1.25	30.6	93.6	26.142	460//380-415/660-690	7
		1200//1000	200L	01812ET3Y200L-W22	$4,886	T1	552	1.25	30.8	93.0	30.197	460//380-415/660-690	7
		900//750	225S/M	01809ET3Y225S/M-W22	$5,902	T1	830	1.25	31.6	93.0	34.882	460//380-415/660-690	7
30	22	3600//3000	180M	02236ET3Y180M-W22	$3,492	T1	424	1.25	34.7	92.4	26.142	460//380-415/660-690	7
		1800//1500	180L	02218ET3Y180L-W22	$3,225	T1	457	1.25	36.0	93.6	27.638	460//380-415/660-690	7
		1200//1000	200L	02212ET3Y200L-W22	$4,924	T1	601	1.25	37.1	93.0	30.197	460//380-415/660-690	7
		900//750	225S/M	02209ET3Y225S/M-W22	$7,506	T1	885	1.25	37.6	93.0	34.882	460//380-415/660-690	7

continued on next page

Please refer to inside back cover for description of "NOTES"

For detailed specifications, data sheets, drawings and performance curves visit http://www.weg.net

Three-Phase General Purpose Motors

IEC TRU-Metric™

TEFC - Foot Mount - *continued*

HP	kW	RPM	Frame	Catalog Number	List Price	Mult. Symbol	Approx. Shipping Weight (lbs)	Service Factor	FL Amps @ High	FL. Eff (%)	"C" Dimension (in)	Voltage (V)	Notes
40	30	3600//3000	200L	03036ET3Y200L-W22	$4,877	T1	575	1.25	47.1	93.0	30.197	460//380-415/660-690	7
		1800//1500	200L	03018ET3Y200L-W22	$4,312	T1	580	1.25	49.4	94.1	30.197	460//380-415/660-690	7
		1200//1000	225S/M	03012ET3Y225S/M-W22	$7,689	T1	1055	1.25	47.6	94.1	34.882	460//380-415/660-690	7
		900//750	250S/M	03009ET3Y250S/M-W22	$8,858	T1	1078	1.25	50.9	93.6	37.992	460//380-415/660-690	7
50	37	3600//3000	200L	03736ET3Y200L-W22	$5,487	T1	587	1.25	61.3	93.6	30.197	460//380-415/660-690	7
		1800//1500	225S/M	03718ET3Y225S/M-W22	$6,984	T1	1041	1.25	58.5	94.5	34.882	460//380-415/660-690	7
		1200//1000	250S/M	03712ET3Y250S/M-W22	$9,947	T1	1266	1.25	58.8	94.1	37.992	460//380-415/660-690	7
		900//750	280S/M	03709ET3Y280S/M-W22	$11,751	T1	1481	1.25	64.1	94.1	42.165	460//380-415/660-690	7
60	45	3600//3000	225S/M	04536ET3Y225S/M-W22	$7,961	T1	1053	1.25	66.7	94.1	33.701	460//380-415/660-690	7
		1800//1500	225S/M	04518ET3Y225S/M-W22	$7,391	T1	1022	1.25	69.9	95.0	34.882	460//380-415/660-690	7
		1200//1000	280S/M	04512ET3Y280S/M-W22	$11,023	T1	1681	1.25	74.7	94.5	42.165	460//380-415/660-690	7
		900//750	280S/M	04509ET3Y280S/M-W22	$12,815	T1	1631	1.25	77.0	94.1	42.165	460//380-415/660-690	7
75	55	3600//3000	250S/M	05536ET3Y250S/M-W22	$9,847	T1	1259	1.25	80.3	94.5	37.992	460//380-415/660-690	7
		1800//1500	250S/M	05518ET3Y250S/M-W22	$8,961	T1	1206	1.25	85.1	95.4	37.992	460//380-415/660-690	7
		1200//1000	280S/M	05512ET3Y280S/M-W22	$13,622	T1	1794	1.25	90.2	94.5	42.165	460//380-415/660-690	7
		900//750	315S/M	05509ET3Y315S/M-W22	$15,379	T1	2436	1.25	93.7	94.5	50.157	460//380-415/660-690	7
100	75	3600//3000	280S/M	07536ET3Y280S/M-W22	$12,472	T1	1776	1.25	111	94.5	42.165	460//380-415/660-690	7
		1800//1500	280S/M	07518ET3Y280S/M-W22	$12,353	T1	1738	1.25	116	95.4	42.165	460//380-415/660-690	7
		1200//1000	315S/M	07512ET3Y315S/M-W22	$16,479	T1	2399	1.25	122	95.0	50.157	460//380-415/660-690	7
		900//750	315S/M	07509ET3Y315S/M-W22	$18,647	T1	2701	1.25	127	95.0	50.157	460//380-415/660-690	7
125	90	3600//3000	280S/M	09036ET3Y280S/M-W22	$16,720	T1	1862	1.25	132	95.0	42.165	460//380-415/660-690	7
		1800//1500	280S/M	09018ET3Y280S/M-W22	$15,220	T1	1835	1.25	139	95.4	42.165	460//380-415/660-690	7
		1200//1000	315S/M	09012ET3Y315S/M-W22	$19,448	T1	2601	1.25	146	95.4	50.157	460//380-415/660-690	7
		900//750	315S/M	09009ET3Y315S/M-W22	$21,288	T1	2884	1.25	152	95.0	50.157	460//380-415/660-690	7
150	110	3600//3000	315S/M	11036ET3Y315S/M-W22	$21,018	T1	2382	1.25	163	95.0	48.976	460//380-415/660-690	7
		1800//1500	280S/M	11018ET3Y280S/M-W22	$17,078	T1	2210	1.25	170	95.8	42.165	460//380-415/660-690	7
		1200//1000	315S/M	11012ET3Y315S/M-W22	$22,507	T1	2730	1.25	178	95.8	50.157	460//380-415/660-690	7
		900//750	315L	11009ET3Y315L-W22	$27,910	T1	3008	1.25	186	95.4	54.685	460//380-415/660-690	7,43
175	132	3600//3000	315S/M	13236ET3Y315S/M-W22	$23,180	T1	2662	1.25	193	95.4	48.976	460//380-415/660-690	7
		1800//1500	315S/M	13218ET3Y315S/M-W22	$19,732	T1	2540	1.25	203	96.2	50.157	460//380-415/660-690	7
		1200//1000	315S/M	13212ET3Y315S/M-W22	$25,642	T1	3031	1.25	214	95.8	50.157	460//380-415/660-690	7
		900//750	315L	13209ET3Y315L-W22	$33,687	T1	3796	1.25	223	95.4	54.685	460//380-415/660-690	7,43
200	150	3600//3000	315S/M	15036ET3Y315S/M-W22	$26,249	T1	2682	1.25	219	95.4	48.976	460//380-415/660-690	7
		1800//1500	315S/M	15018ET3Y315S/M-W22	$21,772	T1	2784	1.25	228	96.2	50.157	460//380-415/660-690	7
		1200//1000	315L	15012ET3Y315L-W22	$28,298	T1	3557	1.15	240	95.8	54.685	460//380-415/660-690	7,43
250	185	3600//3000	315S/M	18536ET3Y315S/M-W22	$26,529	T1	2900	1.25	269	95.8	48.976	460//380-415/660-690	7
		1800//1500	315S/M	18518ET3Y315S/M-W22	$26,247	T1	2948	1.25	284	96.2	50.157	460//380-415/660-690	7
		1200//1000	355M/L	18512ET3Y355M/L-W22	$43,876	T1	3666	1.15	311	95.8	58.346	460//380-415/660-690	7
300	220	3600//3000	315L	22036ET3Y315L-W22	$44,212	T1	3468	1.25	315	96.2	53.268	460//380-415/660-690	7,43
		1800//1500	315L	22018ET3Y315L-W22	$36,234	T1	3113	1.25	338	96.2	54.685	460//380-415/660-690	7,43
		1200//1000	355M/L	22012ET3Y355M/L-W22	$46,322	T1	4507	1.15	370	95.8	58.346	460//380-415/660-690	7,43
350	260	3600//3000	355M/L	26036ET3Y355M/L-W22	$50,637	T1	4975	1.15	373	96.2	55.591	460//380-415/660-690	7,43,51
		1800//1500	355M/L	26018ET3Y355M/L-W22	$43,761	T1	4218	1.15	399	96.2	58.346	460//380-415/660-690	7,43
		1200//1000	355M/L	26012ET3Y355M/L-W22	$53,001	T1	5075	1.15	436	95.9	58.346	460//380-415/660-690	7,43
400	300	3600//3000	355M/L	30036ET3Y355M/L-W22	$66,321	T1	4034	1.15	315	96.2	55.591	460//380-415/660-690	7,43
		1800//1500	355M/L	30018ET3Y355M/L-W22	$60,292	T1	4337	1.00	466	96.2	58.346	460//380-415/660-690	7,43
450	330	1800//1500	355M/L	33018ET3Y355M/L-W22	$64,557	T1	4906	1.15	505	96.5	58.346	460//380-415/660-690	7,43

Please refer to inside back cover for description of "NOTES"

For detailed specifications, data sheets, drawings and performance curves visit http:// www.weg.net

Data subject to change without notice.

TEFC – Foot Mount - IE4

HP	kW	RPM	Frame	Catalog Number	List Price	Mult. Symbol	Approx. Shipping Weight (lbs)	Service Factor	FL Amps @ High	FL. Eff (%)	"C" Dimension (in)	Voltage (V)	Notes
100	75	3600//3000	280S/M	07536EG3Y280S/M-W22	$14,093	T1	1599	1.25	113	95	42.165	460//380-415/660-690	7
100	75	1800//1500	280S/M	07518EG3Y280S/M-W22	$13,959	T1	1654	1.25	119	96.2	42.165	460//380-415/660-690	7
100	75	1200//1000	315S/M	07512EG3Y315S/M-W22	$19,445	T1	2095	1.25	126	95.8	50.157	460//380-415/660-690	7
125	90	3600//3000	280S/M	09036EG3Y280S/M-W22	$18,894	T1	1797	1.25	136	95.4	42.165	460//380-415/660-690	7
125	90	1800//1500	280S/M	09018EG3Y280S/M-W22	$17,199	T1	1819	1.25	141	96.2	42.165	460//380-415/660-690	7
125	90	1200//1000	315S/M	09012EG3Y315S/M-W22	$22,949	T1	2183	1.25	149	95.8	50.157	460//380-415/660-690	7
150	110	3600//3000	315S/M	11036EG3Y315S/M-W22	$23,750	T1	2282	1.25	168	95.4	48.976	460//380-415/660-690	7
150	110	1800//1500	315S/M	11018EG3Y315S/M-W22	$19,298	T1	2062	1.25	175	96.2	50.157	460//380-415/660-690	7
150	110	1200//1000	315S/M	11012EG3Y315S/M-W22	$28,948	T1	2889	1.25	177	96.2	50.157	460//380-415/660-690	7
175	132	3600//3000	315L	13236EG3Y315L-W22	$26,193	T1	2492	1.25	197	95.8	48.976	460//380-415/660-690	7
175	132	1800//1500	315S/M	13218EG3Y315S/M-W22	$22,297	T1	2161	1.25	209	96.5	50.157	460//380-415/660-690	7
175	132	1200//1000	315L	13212EG3Y315L-W22	$30,258	T1	3010	1.15	213	96.2	54.685	460//380-415/660-690	7
200	150	3600//3000	315S/M	15036EG3Y315S/M-W22	$29,661	T1	2569	1.25	226	95.8	48.976	460//380-415/660-690	7
200	150	1800//1500	315L	15018EG3Y315L-W22	$28,047	T1	2602	1.15	230	96.5	50.157	460//380-415/660-690	7
200	150	1200//1000	315L	15012EG3Y315L-W22	$39,402	T1	3131	1.15	239	96.2	54.685	460//380-415/660-690	7,43
250	185	3600//3000	315L	18536EG3Y315L-W22	$30,243	T1	2745	1.15	271	96.2	53.385	460//380-415/660-690	7,43
250	185	1800//1500	315L	18518EG3Y315L-W22	$29,659	T1	2723	1.15	286	96.5	54.685	460//380-415/660-690	7,43
250	185	1200//1000	355M/L	18512EG3Y355M/L-W22	$50,457	T1	3737	1.15	309	96.2	58.346	460//380-415/660-690	7,43

TEFC – Foot Mount - (FF) B5 D-Flange Style with Feet

HP	kW	RPM	Frame	Catalog Number	List Price	Mult. Symbol	Approx. Shipping Weight (lbs)	Service Factor	FL Amps @ High	FL. Eff (%)	"C" Dimension (in)	Voltage (V)	Notes
0.50	0.37	1800//1500	71	.3718EP3EAL71FF-W22	$340	T1	26	1.15	1.06	73.0	9.764	230/460//190/380	2,7
0.75	0.55	3600//3000	71	.5536EP3EAL71FF-W22	$366	T1	23	1.15	1.14	76.0	9.764	230/460//190/380	2,7
		1800//1500	80	.5518EP3EAL80FF-W22	$383	T1	28	1.15	1.25	77.0	10.866	230/460//190/380	2,7
1	0.75	1800//1500	90S/L	.7518ET3WAL90S/LFF-W	$479	T1	43	1.25	1.47	85.5	12.953	460//220-240/380-415	2,7
		1800//1500	90S/L	.7518ET3EAL90S/LFF-W	$479	T1	42	1.25	1.47	85.5	12.953	230/460//190/380	2,7
2	1.5	1800//1500	90S/L	00158ET3EAL90LFF-W22	$583	T1	49	1.25	2.79	86.5	12.953	230/460//190/380	2,7
		1800//1500	90L	00158ET3WAL90LFF-W22	$583	T1	51	1.25	2.79	86.5	12.953	460//220-240/380-415	
		1200//1000	100L	00152ET3WAL100LFF-W2	$882	T1	76	1.25	3.04	88.5	14.803	460//220-240/380-415	2,7
3	2.2	3600/3000	90L	00236ET3WAL90LFF-W22	$815	T1	46	1.25	3.85	86.5	12.953	460//220-240/380-415	
		1800//1500	100L	00218ET3EAL100LFF-W2	$700	T1	66	1.25	4.11	89.5	14.803	230/460//190/380	2,7
		1800//1500	100L	00218ET3WAL100LFF-W2	$700	T1	68	1.25	4.05	87.5	14.803	460//220-240/380-415	
4	3	1800//1500	100L	00318ET3WAL100LFF-W2	$742	T1	77	1.25	5.33	89.5	14.803	460//220-240/380-415	2,7
5.5	4	3600//3000	112M	00436ET3YAL112MFF-W2	$944	T1	86	1.25	6.67	88.5	15.472	460//380-415/660-690	2,7
		1800//1500	112M	00418ET3YAL112MFF-W2	$749	T1	93	1.25	7.28	89.5	15.472	460//380-415/660-690	2,7
		1200//1000	132M	00412ET3YAL132MFF-W2	$1,333	T1	147	1.25	7.9	89.5	19.291	460//380-415/660-690	2,7
7.5	5.5	3600/3000	132S	00536ET3YAL132SFF-W2	$1,223	T1	135	1.25	8.97	89.5	19.291	460//380-415/660-690	39
		1800//1500	132S	00518ET3YAL132SFF-W2	$1,011	T1	142	1.25	9.07	91.7	19.291	460//380-415/660-690	2,7
10	7.5	3600//3000	132S	00736ET3YAL132SFF-W2	$1,371	T1	147	1.25	12.3	90.2	19.291	460//380-415/660-690	2,7
		1800//1500	132M	00718ET3YAL132MFF-W2	$1,189	T1	159	1.25	12.2	91.7	19.291	460//380-415/660-690	2,7
15	11	3600//3000	160M	01136ET3Y160MFF-W22	$2,219	T1	304	1.25	17.9	91.7	23.543	460//380-415/660-690	7
		1800//1500	160M	01118ET3Y160MFF-W22	$1,843	T1	304	1.25	18.2	92.4	23.543	460//380-415/660-690	7
20	15	1800//1500	160L	01518ET3Y160LFF-W22	$2,235	T1	358	1.25	25.0	93.0	25.276	460//380-415/660-690	7
30	22	1800//1500	180L	02218ET3Y180LFF-W22	$3,361	T1	501	1.25	36.0	93.6	27.638	460//380-415/660-690	7
50	37	3600//3000	200L	03736ET3Y200LFF-W22	$5,789	T1	595	1.25	61.3	93.6	30.197	460//380-415/660-690	7,51
		1800//1500	225S/M	03718ET3Y225S/MFF-W22	$7,774	T1	1058	1.25	58.5	94.5	34.882	460//380-415/660-690	7

Please refer to inside back cover for description of "NOTES"

For detailed specifications, data sheets, drawings and performance curves visit http://www.weg.net

Three-Phase General Purpose Motors

Integrated Solution (W22 Cast Iron + MW500 G2)

The MW500 is a high-performance frequency inverter used to control three-phase Induction. Its dedicated functions and high degree of protection (IP66/NEMA 4X) allow its use in applications that require a high level of precision and robustness.

The MW500 includes built-in SoftPLC capability with free WPS/WLP programming software for custom tailored control schemes without additional hardware. A variety of plug-in option modules may be added for additional I/O and communications protocols, providing extended capabilities, and making the MW500 a flexible and cost-effective solution for your variable speed requirements.

Standard Features:

- Same programming as other WEG VFDs including CFW500 drives.
- Built-in SoftPLC.
- Scalar, Vector Control (Sensorless and closed loop with encoder feedback) & VVW PM (suitable for fan, Pump and compressor).
- NEMA 4X (IP66) Enclosure with and without disconnect switch, suitable for indoor and outdoor (not in direct sunlight) use.
- 3/380-480V input voltage.
- Heavy Duty rated - 150% current overload capacity.
- Built-in Category-2 RFI Filter
- 0 to 500 Hz output frequency.
- 2.5 to 15 kHz adjustable switching frequency (4 kHz standard)
- Built-in 24Vdc Power supply (max. 150 mA).
- Built-in RS-485 (Modbus RTU/BACnet) communication.
- Four isolated programmable digital inputs.
- One programmable relay output (1NO, 1NC, 240vac 0.5A).
- One programmable transistor output.
- One isolated programmable analog input (0-10V, 0/4-20mA).
- One isolated programmable analog output (0-10V, 0/4-20mA).
- Optional Safe Torque off Module.
- WLP and WPS compatible.

Please refer to inside back cover for description of “NOTES”

Integrated Solution (W22 Cast Iron + MW500 G2)

Integrated Motor - C Flange Mounted - MW500 with Disconnect Switch

HP	RPM	Frame	Catalog Number	List Price	Mult Symbol	Note
5	3600	215TC	00536ET3ER184TC-W22 + MW500B06P5T4DB66C2DSA56G2	3166	PTI	24
5	1800	215TC	00518ET3ER184TC-W22 + MW500B06P5T4DB66C2DSA56G2	3034	PTI	24
7.5	3600	215TC	00736ET3ER213TC-W22 + MW500B10P0T4DB66C2DSA56G2	3656	PTI	24
7.5	1800	215TC	00718ET3ER213TC-W22 + MW500B10P0T4DB66C2DSA56G2	3609	PTI	24
10	3600	215TC	01036ET3ER215TC-W22 + MW500C14P0T4DB66C2DSG2	4271	PTI	24
10	1800	215TC	01018ET3ER215TC-W22+ MW500C14P0T4DB66C2DSG2	4198	PTI	24
15	3600	254TC	01536ET3ER254TC-W22 + MW500C16P0T4DB66C2DSG2	5254	PTI	24
15	1800	254TC	01518ET3ER254TC-W22 + MW500C16P0T4DB66C2DSG2	5285	PTI	24

Integrated Motor - Foot Mounted - MW500 with Disconnect Switch

HP	RPM	Frame	Catalog Number	List Price	Mult Symbol	Note
5	3600	215T	00536ET3E184TF3-W22 + MW500B06P5T4DB66C2DSA56G2	3116	PTI	24
5	1800	215T	00518ET3E184TF3-W22 + MW500B06P5T4DB66C2DSA56G2	2984	PTI	24
7.5	3600	215T	00736ET3E215TF3-W22 + MW500B10P0T4DB66C2DSA56G2	3481	PTI	24
7.5	1800	215T	00718ET3E213TF3-W22 + MW500B10P0T4DB66C2DSA56G2	3542	PTI	24
10	3600	215T	01036ET3E215TF3-W22 + MW500C14P0T4DB66C2DSG2	4205	PTI	24
10	1800	215T	01018ET3E215TF3-W22 + MW500C14P0T4DB66C2DSG2	4128	PTI	24
15	3600	254T	01536ET3E254TF3-W22 + MW500C16P0T4DB66C2DSG2	5164	PTI	24
15	1800	254T	01518ET3E254TF3-W22 + MW500C16P0T4DB66C2DSG2	5194	PTI	24

Integrated Motor - C Flange Mounted - MW500 without Disconnect Switch

HP	RPM	Frame	Catalog Number	List Price	Mult Symbol	Note
5	3600	215TC	00536ET3ER184TC-W22 + MW500B06P5T4DB66C2A56G2	2966	PTI	24
5	1800	215TC	00518ET3ER184TC-W22 + MW500B06P5T4DB66C2A56G2	2834	PTI	24
7.5	3600	215TC	00736ET3ER213TC-W22 + MW500B10P0T4DB66C2A56G2	3443	PTI	24
7.5	1800	215TC	00718ET3ER213TC-W22 + MW500B10P0T4DB66C2A56G2	3396	PTI	24
10	3600	215TC	01036ET3ER215TC-W22 + MW500C14P0T4DB66C2G2	4018	PTI	24
10	1800	215TC	01018ET3ER215TC-W22+ MW500C14P0T4DB66C2G2	3945	PTI	24
15	3600	254TC	01536ET3ER254TC-W22 + MW500C16P0T4DB66C2G2	4966	PTI	24
15	1800	254TC	01518ET3ER254TC-W22 + MW500C16P0T4DB66C2G2	4998	PTI	24

Integrated Motor - Foot Mounted - MW500 without Disconnect Switch

HP	RPM	Frame	Catalog Number	List Price	Mult Symbol	Note
5	3600	215T	00536ET3E184TF3-W22 + MW500B06P5T4DB66C2A56G2	2916	PTI	24
5	1800	215T	00518ET3E184TF3-W22 + MW500B06P5T4DB66C2A56G2	2784	PTI	24
7.5	3600	215T	00736ET3E215TF3-W22 + MW500B10P0T4DB66C2A56G2	3268	PTI	24
7.5	1800	215T	00718ET3E213TF3-W22 + MW500B10P0T4DB66C2A56G2	3329	PTI	24
10	3600	215T	01036ET3E215TF3-W22 + MW500C14P0T4DB66C2G2	3952	PTI	24
10	1800	215T	01018ET3E215TF3-W22 + MW500C14P0T4DB66C2G2	3875	PTI	24
15	3600	254T	01536ET3E254TF3-W22 + MW500C16P0T4DB66C2G2	4876	PTI	24
15	1800	254T	01518ET3E254TF3-W22 + MW500C16P0T4DB66C2G2	4907	PTI	24

Please refer to inside back cover for description of “NOTES”

For detailed specifications, data sheets, drawings and performance curves visit http://www.weg.net

Super Premium Efficiency Motors

SEVERE DUTY GENERAL PURPOSE

Three-Phase

TEFC

Super Premium Efficiency motors offer high performance with maximum energy efficiency. This motor provides high efficiency and low cost of ownership throughout the entire motor lifetime. This design maximizes performance and energy savings.

WEG's W22 Super Premium cast iron platform has a superior cooling system and solid feet for cooler operation and minimal vibration and noise extending the life of the motor.

Standard Features:

- 50/60 Hz rated (380V on Nameplate - 400/415 Available - Same Horsepower at 50 Hz with a 1.0 Service Factor)
- Class F insulation (Impregnation Resin and Magnet wire are class H)
- NEMA design A. All ratings Exceed NEMA design C for motors 15HP and above
- F1 Mounted (Cast Iron frames 254T and larger are F2 convertible)
- Stainless Steel Nameplate - Laser etched with high contrast background
- Regreasable ball bearings (Frames 254T and up)
- Gasketed conduit box
- Class I, Div. 2, Groups A, B, C & D – T3, Class II, Div 2, Groups F & G – T3C

Features that make a difference:

- Super Premium efficiency exceeding NEMA Premium® levels
- 1.25 Service Factor in all ratings
- Optimized ventilation system for cooler operation and low noise levels.
- Solid base for lower vibration levels
- Frames 447T and up can easily be F2 converted by rotating the terminal box adapter
- NPT Threaded terminal box

Inverter Rated:
1000 : 1 for variable torque
20 : 1 for constant torque

TEFC - Foot Mount

HP	kW	RPM	Frame	Catalog Number	List Price	Mult. Symbol	Approx. Shipping Weight (lbs)	Service Factor	FL Amps @ High	FL. Eff (%)	"C" Dimension (in)	Voltage (V)	Notes
1	0.75	3600	143/5T	00136EG3E143T-W22	$569	N1	48	1.25	1.35	84.0	13.358	230/460	36;37
		1800	143/5T	00118EG3E143T-W22	$580	N1	56	1.25	1.33	87.5	13.358	230/460	36;37
1.5	1.1	3600	143/5T	00156EG3E143T-W22	$597	N1	51	1.25	1.92	86.5	13.358	230/460	36;37
		1800	L143/5T	00158EG3EL145T-W22	$606	N1	64	1.25	1.93	88.5	14.566	230/460	36;37;39
2	1.5	3600	143/5T	00236EG3E145T-W22	$650	N1	56	1.25	2.56	87.5	13.358	230/460	36;37
		1800	L143/5T	00218EG3EL145T-W22	$673	N1	64	1.25	2.63	88.5	14.566	230/460	36;37;39
3	2.2	3600	182/4T	00336EG3E182T-W22	$839	N1	98	1.25	3.67	88.5	15.860	230/460	36;37
		1800	182/4T	00318EG3E182T-W22	$729	N1	103	1.25	3.75	91.0	15.860	230/460	36;37
		1200	213/5T	00312EG3E213T-W22	$1,242	N1	184	1.25	4.31	90.2	19.517	230/460	36;37;51
5	3.7	3600	182/4T	00536EG3E184T-W22	$960	N1	106	1.25	5.99	90.2	15.860	230/460	36;37
		1800	L182/4T	00518EG3EL184T-W22	$849	N1	118	1.25	6.38	91.0	17.041	230/460	36;37;39
		1200	L213/5T	00512EG3EL215T-W22	$1,465	N1	207	1.25	6.80	91.0	20.461	230/460	36;37;39
7.5	5.5	3600	213/5T	00736EG3E213T-W22	$1,238	N1	169	1.25	8.82	91.0	19.517	230/460	36;37
		1800	213/5T	00718EG3E213T-W22	$1,198	N1	186	1.25	8.94	93.0	19.517	230/460	36;37
		1200	254/6T	00712EG3E254T-W22	$2,272	N1	356	1.25	9.46	92.4	24.945	230/460	36;37;51
10	7.5	3600	213/5T	01036EG3E215T-W22	$1,465	N1	193	1.25	11.5	91.7	19.517	230/460	36;37
		1800	L213/5T	01018EG3EL215T-W22	$1,400	N1	209	1.25	12.0	93.0	20.461	230/460	36;37;39
		1200	254/6T	01012EG3E256T-W22	$2,636	N1	387	1.25	12.7	92.4	24.945	230/460	36;37
15	11	3600	254/6T	01536EG3E254T-W22	$2,006	N1	340	1.25	17.4	92.4	24.945	230/460	36;37
		1800	254/6T	01518EG3E254T-W22	$2,033	N1	365	1.25	17.8	93.6	24.945	230/460	36;37
		1200	284/6T	01512EG3E284T-W22	$3,620	N1	449	1.25	18.1	93.0	27.929	230/460	36;37
20	15	3600	254/6T	02036EG3E256T-W22	$2,620	N1	373	1.25	23.0	93.0	24.945	230/460	36;37
		1800	254/6T	02018EG3E256T-W22	$2,421	N1	396	1.25	24.7	94.1	24.945	230/460	36;37
		1200	284/6T	02012EG3E286T-W22	$4,358	N1	495	1.25	24.4	93.0	27.929	230/460	36;37
25	18.5	3600	284/6TS	02536EG3E284TS-W22	$3,298	N1	435	1.25	28.5	93.6	26.557	230/460	36;37
		1800	284/6T	02518EG3E284T-W22	$3,017	N1	459	1.25	30.3	94.5	27.929	230/460	36;37
		1200	324/6T	02512EG3E324T-W22	$5,211	N1	623	1.25	30.8	94.1	31.116	230/460	36;37;51
30	22	3600	284/6TS	03036EG3E286TS-W22	$3,917	N1	475	1.25	33.5	93.6	26.557	230/460	36;37
		1800	284/6T	03018EG3E286T-W22	$3,545	N1	491	1.25	35.6	94.5	27.929	230/460	36;37
		1200	324/6T	03012EG3E326T-W22	$5,800	N1	667	1.25	36.7	94.1	31.116	230/460	36;37
40	30	3600	324/6TS	04036EG3E324TS-W22	$5,198	N1	590	1.25	46.5	94.1	29.616	230/460	36;37
		1800	324/6T	04018EG3E324T-W22	$4,596	N1	638	1.25	48.9	95.0	31.116	230/460	36;37
		1200	364/5T	04012EG3E364T-W22	$8,012	N1	1046	1.25	48.9	95.0	34.251	230/460	36;37;51
50	37	3600	324/6TS	05036EG3E326TS-W22	$5,848	N1	637	1.25	57.1	94.5	29.616	230/460	36;37
		1800	324/6T	05018EG3E326T-W22	$5,610	N1	661	1.25	60.1	95.4	31.116	230/460	36;37
		1200	364/5T	05012EG3E365T-W22	$9,370	N1	1062	1.25	60.3	95.0	34.251	230/460	36;37
60	45	3600	364/5TS	06036EG3E364TS-W22	$8,307	N1	1042	1.25	66.8	95.0	32.338	230/460	36;37
		1800	364/5T	06018EG3E364T-W22	$8,128	N1	1045	1.25	70.2	95.8	34.251	230/460	36;37
		1200	404/5T	06012EG3E404T-W22	$11,547	N1	1323	1.25	72.2	95.4	39.730	230/460	36;37
75	55	3600	364/5TS	07536EG3E365TS-W22	$10,000	N1	1041	1.25	82.6	95.0	32.338	230/460	36;37
		1800	364/5T	07518EG3E365T-W22	$9,576	N1	1046	1.25	86.8	95.8	34.251	230/460	36;37
		1200	404/5T	07512EG3E405T-W22	$13,264	N1	1344	1.25	89.3	95.4	39.730	230/460	36;37
100	75	3600	404/5TS	10036EG3E405TS-W22	$13,202	N1	1299	1.25	111	95.4	36.732	230/460	36;37
		1800	404/5T	10018EG3E405T-W22	$12,858	N1	1328	1.25	116	96.2	39.730	230/460	36;37
		1200	444/5T	10012EG3E444T-W22	$17,194	N1	2145	1.25	124	95.8	45.157	230/460	36;37

continued on next page

Please refer to inside back cover for description of "NOTES"

For detailed specifications, data sheets, drawings and performance curves visit http:// www.weg.net

GENERAL PURPOSE - Three-Phase

TEFC - Foot Mount - *continued*

HP	kW	RPM	Frame	Catalog Number	List Price	Mult. Symbol	Approx. Shipping Weight (lbs)	Service Factor	FL Amps @ High	FL. Eff (%)	"C" Dimension (in)	Voltage (V)	Notes
125	90	3600	444/5TS	12536EG3G444TS-W22	**$16,885**	N1	1872	1.25	136	95.8	41.407	460	36;37
		1800	444/5T	12518EG3G444T-W22	**$16,223**	N1	1991	1.25	140	96.2	45.157	460	36;37
		1200	444/5T	12512EG3G445T-W22	**$19,742**	N1	2231	1.25	152	95.8	45.157	460	36;37;51
150	110	3600	444/5TS	15036EG3G445TS-W22	**$20,770**	N1	2071	1.25	163	96.2	41.407	460	36;37;51
		1800	444/5T	15018EG3G445T-W22	**$19,162**	N1	2226	1.25	170	96.5	45.157	460	36;37
		1200	447/9T	15012EG3G449T-W22	**$22,703**	N1	3098	1.25	179	96.2	56.338	460	36;37;51
200	150	3600	445/7TS	20036EG3G447TS-W22	**$25,918**	N1	2333	1.25	217	96.2	44.951	460	36;37
		1800	447/9T	20018EG3G449T-W22	**$23,208**	N1	2995	1.25	234	96.8	56.338	460	36;37
		1200	447/9T	20012EG3G449T-W22	**$27,646**	N1	3145	1.25	245	96.2	56.338	460	36;37;51
250	185	3600	445/7TS	25036EG3G447TS-W22	**$32,831**	N1	2480	1.25	267	96.5	44.951	460	36;37
		1800	447/9T	25018EG3G449T-W22	**$29,388**	N1	3083	1.25	286	96.8	56.338	460	36;37

Please refer to inside back cover for description of "NOTES"

For detailed specifications, data sheets, drawings and performance curves visit http://www.weg.net

Data subject to change without notice.

W23 Sync+

Combining technologies for superior efficiency.

page A-80

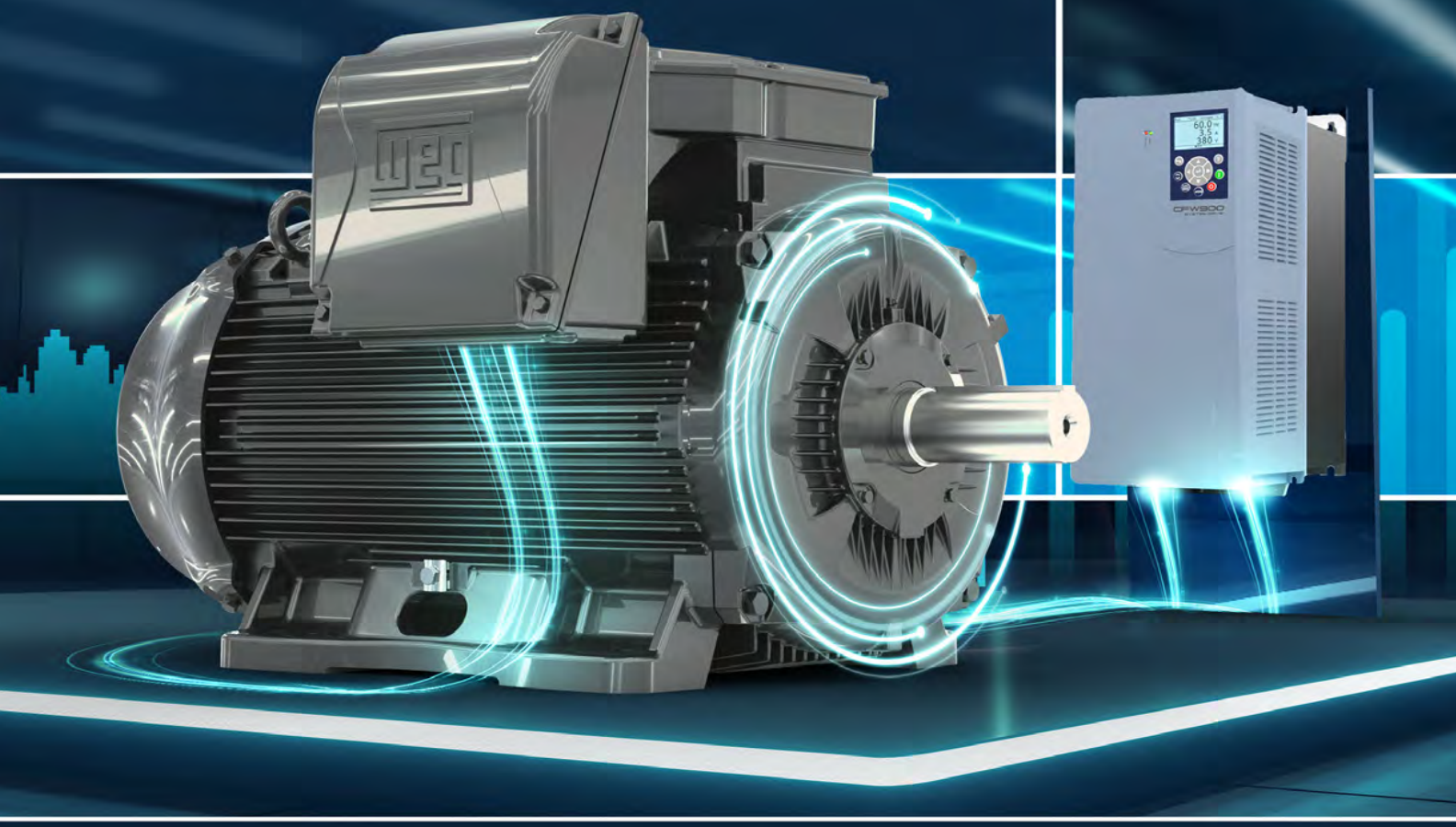

The pursuit for sustainable innovation as well as the quality and trust in everything WEG thinks and does, resulted in the W23 Sync+.

This new WEG's synchronous electric motor line offers the largest range of motors meeting IE5 and IE6 efficiency levels in the market. With the same power per frame ratio as induction motors, it is easily interchangeable, besides delivering maximum performance across all speeds, contributing to the CO2 redution and presenting a much lower total cost of ownership.

Driving efficiency and sustainability

Severe Duty – Three-Phase Motors

GENERAL PURPOSE

TEFC – Foot Mount A-97
TEFC – C-Face – Foot Mount A-104
TEFC – C-Face – Footless A-106

IEEE 841

TEFC – Foot Mount A-108
TEFC – C-Face – Foot Mount A-112
TEFC – C-Face – Footless A-113
W22 API661 Severe Duty Motors A-115

CRUSHER DUTY

TEFC – Foot Mount A-117

VECTOR DUTY

TENV – Foot Mount – Double C-Face A-119

W23 Sync+ Permanent Magnet Motors

TEFC - Foot Mount A-121

IEC TRU-METRIC™

TEFC – Foot Mount IE3 . . . . . A-124
TEFC – Foot Mount (IE4) A-125
TEFC – Foot Mount – FF-Face Motors A-126

Severe-Duty – Three Phase Motors

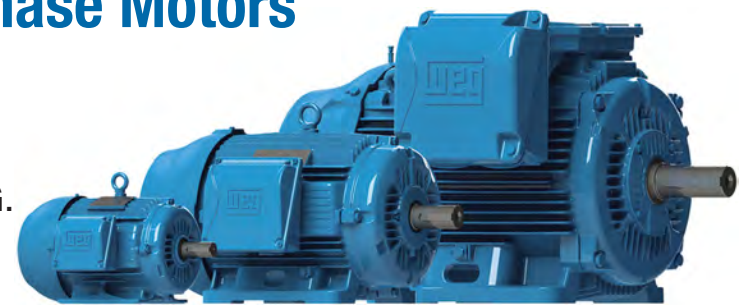

You Do Not Need A Special Motor For Severe Duty.

Severe Duty Is Standard With WEG.

W22 - Cast Iron

Standard Features:

- 50/60 Hz rated (380V on nameplate - 400/415 available)
- Rated 50HZ at same horsepower up to 250HP 1.0 Service Factor for 2, 4 & 6 pole motors
- Rated 50Hz at same horsepower up to 125HP 1.0 Service Factor for 8 pole motors
- Class F insulation (impregnation resin and magnet wire are class H)
- F1 mounted (cast iron frames are F2 convertible). Frames 447T and up can easily be F2 converted by simply rotating the terminal box adapter
- Cast iron frames: regreasable ball bearings (frames 254T and up)
- Gasketed conduit box
- 200-240V Space heaters standard on Frames 586/7-588/9

*Inverter Rated

1000:1 for Variable Torque

NEMA Premium®

20:1 Constant Torque up to 250HP

6:1 Constant Torque 300HP and up

** Insulated housing standard on L449T and above*

Features that make a difference:

- All NEMA Premium® ratings have a 1.25 Service Factor (up to 100 HP) resulting in cooler operation and extended life of the motor
- All Cast Iron Construction, including Terminal Box and Fan Cover (*)
- Solid feet for low vibration levels and impact absorption
- Optimized ventilation system for cool operation and extended life
- High Grade FC200 cast iron provides superior mechanical strength and heat dissipation
- All WEG W22 motors are Totally Enclosed Fan Cooled with a true IP55 rating against dust and moisture. (IP56, IP65 and IP66 available as optional)
- Exclusive W-Seal 364T and larger provides superior bearing protection
- Taconite Labyrinth seal 586 Frame and larger
- Exclusive WEG painting system exceed 200hrs ASTM 117 corrosion test (Exceeds IEEE 841 standard)
- Balanced to 0.08 inches per second vibration limits (Meets IEEE 841 standard)
- Four Bolt Conduit Cover with glued Neoprene Gasket
- Impregnation Resin and magnet wire are insulation class H
- Stainless Steel Nameplate - Laser etched with high contrast background
- Corrosion Proof Drains
- Inverter Duty per NEMA MG1, Part 31
- Certified Class I Div 2, Groups A, B, C & D; Class II, Div 2, Groups F & G
- Suitable for IEEE45 USCG 259 – Marine Duty

*Cast iron fan cover available as an option on 143-215T frames

Severe Duty - Three-Phase Motors

GENERAL PURPOSE

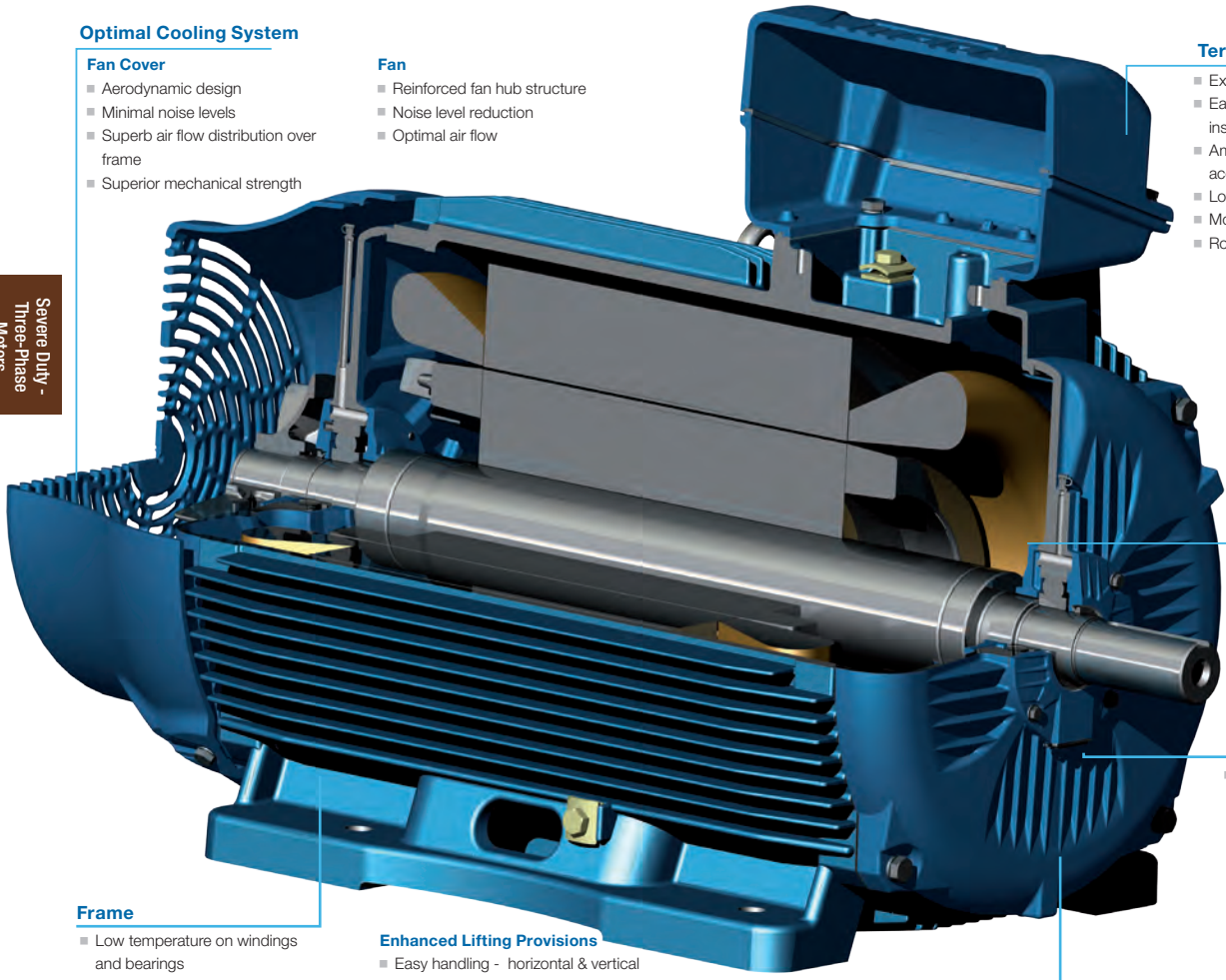

Optimal Cooling System

Fan Cover
- Aerodynamic design
- Minimal noise levels
- Superb air flow distribution over frame
- Superior mechanical strength

Fan
- Reinforced fan hub structure
- Noise level reduction
- Optimal air flow

Terminal Box
- Excellent connection quality
- Easy cable handling during installation
- Ample space available for accessory installation
- Low Maintenance
- Mounting F1/F2/F3
- Rotation on 90° stages

Bearing Caps

External
- Finned surface for optimal bearing heat dissipation

Internal
- Positive pressure lubrication system
- Excellent bearing lubrication quality improvement
- Lower bearing temperature
- 1.25 SF up to 100 hp

Seal Subsystem
- Excellent dust and moisture protection

Frame
- Low temperature on windings and bearings
- Low noise design
- Terminal box position outlet on top; 447T and larger

Pad for vibration sensor
- Displaced 90° from each other

Enhanced Lifting Provisions
- Easy handling - horizontal & vertical
- Superior mechanical strength and handling safety

Solid feet
- Impact resistance
- Ideal for high vibration level applications

Endshields Subsystem

DE (Drive Endshield)
- Fin design increases air flow
- Bearing moved outwards for better load support
- Bearing heat dissipation for reduced bearing temperature
- Reinforced endshield structure

NDE (Non-Drive Endshield)
- Smooth exterior surface
- Optimal air flow
- Designed for low noise
- Structural rigidity for low vibration
- Insulated housing standard on L447/9T and above

Please refer to inside back cover for description of "NOTES"

For detailed specifications, data sheets, drawings and performance curves visit http://www.weg.net

Data subject to change without notice.

TEFC - Foot Mount

HP	kW	RPM	Frame	Catalog Number	List Price	Mult. Symbol	Approx. Shipping Weight (lbs)	Service Factor	FL Amps @ High	FL. Eff (%)	"C" Dimension (in)	Voltage (V)	Notes
1	0.75	3600	143/5T	00136ET3E143T-W22	$538	N1	45	1.25	1.44	81.5	13.358	230/460	
		3600	143/5T	00136ET3H143T-W22	$538	N1	44	1.25	1.15	81.5	13.358	575	
		1800	143/5T	00118ET3E143T-W22	$527	N1	48	1.25	1.47	85.5	13.358	230/460	
		1800	143/5T	00118ET3H143T-W22	$527	N1	48	1.25	1.18	85.5	13.358	575	
		1200	143/5T	00112ET3E145T-W22	$608	N1	55	1.25	1.73	82.5	13.358	230/460	
		1200	143/5T	00112ET3H145T-W22	$608	N1	55	1.25	1.38	82.5	13.358	575	
		900	182/4T	00109ET3E182T-W22	$1,043	N1	88	1.25	2.30	78.5	15.860	230/460	
		900	182/4T	00109ET3H182T-W22	$1,043	N1	104	1.25	1.84	78.5	15.860	575	
1.5	1.1	3600	143/5T	00156ET3E143T-W22	$543	N1	49	1.25	1.96	84.0	13.358	230/460	
		3600	143/5T	00156ET3H143T-W22	$543	N1	49	1.25	1.57	84.0	13.358	575	
		1800	143/5T	00158ET3E145T-W22	$551	N1	53	1.25	2.02	86.5	13.358	230/460	
		1800	143/5T	00158ET3H145T-W22	$551	N1	53	1.25	1.62	86.5	13.358	575	
		1200	182/4T	00152ET3E182T-W22	$754	N1	97	1.25	2.54	87.5	15.860	230/460	
		1200	182/4T	00152ET3H182T-W22	$754	N1	97	1.25	2.03	87.5	15.860	575	
		900	182/4T	00159ET3E184T-W22	$1,207	N1	102	1.25	2.70	82.5	15.860	230/460	
		900	182/4T	00159ET3H184T-W22	$1,207	N1	102	1.25	2.16	82.5	15.860	575	
2	1.5	3600	143/5T	00236ET3E145T-W22	$591	N1	54	1.25	2.56	85.5	13.358	230/460	
		3600	143/5T	00236ET3H145T-W22	$591	N1	54	1.25	2.05	85.5	13.358	575	
		1800	143/5T	00218ET3E145T-W22	$612	N1	51	1.25	2.76	86.5	13.358	230/460	
		1800	143/5T	00218ET3H145T-W22	$612	N1	54	1.25	2.21	86.5	13.358	575	
		1200	182/4T	00212ET3E184T-W22	$819	N1	108	1.25	3.22	88.5	15.860	230/460	39
		1200	182/4T	00212ET3H184T-W22	$819	N1	103	1.25	2.58	88.5	15.860	575	39
		900	213/5T	00209ET3E213T-W22	$1,848	N1	171	1.25	3.39	85.5	19.517	230/460	
		900	213/5T	00209ET3H213T-W22	$1,848	N1	171	1.25	2.71	85.5	19.517	575	
3	2.2	3600	182/4T	00336ET3E182T-W22	$763	N1	99	1.25	3.63	86.5	15.860	230/460	
		3600	182/4T	00336ET3H182T-W22	$763	N1	99	1.25	2.90	86.5	15.860	575	
		1800	182/4T	00318ET3E182T-W22	$663	N1	92	1.25	3.91	89.5	15.860	230/460	
		1800	182/4T	00318ET3H182T-W22	$663	N1	94	1.25	3.13	89.5	15.860	575	
		1200	213/5T	00312ET3E213T-W22	$1,129	N1	160	1.25	4.41	89.5	19.517	230/460	
		1200	213/5T	00312ET3H213T-W22	$1,129	N1	163	1.25	3.53	89.5	19.517	575	
		900	213/5T	00309ET3E215T-W22	$2,115	N1	189	1.25	4.55	85.5	19.517	230/460	
		900	213/5T	00309ET3H215T-W22	$2,115	N1	188	1.25	3.64	85.5	19.517	575	
5	3.7	3600	182/4T	00536ET3E184T-W22	$873	N1	103	1.25	5.90	88.5	15.860	230/460	
		3600	182/4T	00536ET3H184T-W22	$873	N1	106	1.25	4.72	88.5	15.860	575	
		1800	182/4T	00518ET3E184T-W22	$772	N1	101	1.25	6.45	89.5	15.860	230/460	
		1800	182/4T	00518ET3H184T-W22	$772	N1	104	1.25	5.16	89.5	15.860	575	
		1800	182/4T	00518ET3P184T-W22	$772	N1	103	1.25	14.8	89.5	15.860	200	
		1200	213/5T	00512ET3E215T-W22	$1,332	N1	170	1.25	6.83	89.5	19.517	230/460	
		1200	213/5T	00512ET3H215T-W22	$1,332	N1	180	1.25	5.46	89.5	19.517	575	
		900	254/6T	00509ET3E254T-W22	$3,301	N1	302	1.25	7.58	87.5	24.945	230/460	
		900	254/6T	00509ET3H254T-W22	$3,301	N1	321	1.25	6.06	87.5	24.945	575	

continued on next page

Please refer to inside back cover for description of "NOTES"

For detailed specifications, data sheets, drawings and performance curves visit http:// www.weg.net

GENERAL PURPOSE

TEFC - Foot Mount - *continued*

HP	kW	RPM	Frame	Catalog Number	List Price	Mult. Symbol	Approx. Shipping Weight (lbs)	Service Factor	FL Amps @ High	FL. Eff (%)	"C" Dimension (in)	Voltage (V)	Notes
7.5	5.5	3600	182/4T	00736ET3E184T-W22	$1,074	N1	106	1.25	8.76	89.5	15.860	230/460	12
		3600	213/5T	00736ET3E213T-W22	$1,125	N1	149	1.25	8.76	89.5	19.517	230/460	
		3600	213/5T	00736ET3H213T-W22	$1,125	N1	163	1.25	7.01	89.5	19.517	575	
		1800	213/5T	00718ET3E213T-W22	$1,089	N1	170	1.25	9.18	91.7	19.517	230/460	
		1800	213/5T	00718ET3H213T-W22	$1,089	N1	174	1.25	7.34	91.7	19.517	575	
		1800	213/5T	00718ET3P213T-W22	$1,089	N1	175	1.25	21.1	91.7	19.517	200	
		1200	254/6T	00712ET3E254T-W22	$2,065	N1	300	1.25	9.48	91.0	24.945	230/460	
		1200	254/6T	00712ET3H254T-W22	$2,065	N1	316	1.25	7.58	91.0	24.945	575	
		900	254/6T	00709ET3E256T-W22	$3,658	N1	317	1.25	11.1	87.5	24.945	230/460	
		900	254/6T	00709ET3H256T-W22	$3,658	N1	373	1.25	8.88	87.5	24.945	575	
10	7.5	3600	213/5T	01036ET3E215T-W22	$1,332	N1	172	1.25	11.6	90.2	19.517	230/460	
		3600	213/5T	01036ET3H215T-W22	$1,332	N1	180	1.25	9.28	90.2	19.517	575	
		1800	213/5T	01018ET3E215T-W22	$1,273	N1	175	1.25	12.4	91.7	19.517	230/460	
		1800	213/5T	01018ET3H215T-W22	$1,273	N1	188	1.25	9.92	91.7	19.517	575	
		1800	213/5T	01018ET3P215T-W22	$1,273	N1	189	1.25	28.5	91.7	19.517	200	
		1200	254/6T	01012ET3E256T-W22	$2,396	N1	318	1.25	12.9	91.0	24.945	230/460	
		1200	254/6T	01012ET3H256T-W22	$2,396	N1	325	1.25	10.3	91.0	24.945	575	
		900	284/6T	01009ET3E284T-W22	$4,634	N1	373	1.25	13.4	90.2	27.929	230/460	
		900	284/6T	01009ET3H284T-W22	$4,634	N1	371	1.25	10.7	90.2	27.929	575	
15	11	3600	213/5T	01536ET3E215T-W22	$1,697	N1	192	1.25	17.0	91.0	19.517	230/460	12
		3600	254/6T	01536ET3E254T-W22	$1,824	N1	293	1.25	17.2	91.0	24.945	230/460	
		3600	254/6T	01536ET3H254T-W22	$1,824	N1	298	1.25	13.8	91.0	24.945	575	
		1800	254/6T	01518ET3E254T-W22	$1,848	N1	339	1.25	18.0	92.4	24.945	230/460	
		1800	254/6T	01518ET3H254T-W22	$1,848	N1	347	1.25	14.4	92.4	24.945	575	
		1800	254/6T	01518ET3P254T-W22	$1,848	N1	349	1.25	41.4	92.4	24.945	200	
		1200	284/6TS	01512ET3E284TS-W22	$3,291	N1	420	1.25	17.9	91.7	26.557	230/460	
		1200	284/6TS	01512ET3H284TS-W22	$3,291	N1	360	1.25	14.3	91.7	26.557	575	
		1200	284/6T	01512ET3E284T-W22	$3,291	N1	406	1.25	17.9	91.7	27.929	230/460	
		1200	284/6T	01512ET3H284T-W22	$3,291	N1	420	1.25	14.3	91.7	27.929	575	
		900	284/6T	01509ET3E286T-W22	$5,368	N1	429	1.25	19.4	90.2	27.929	230/460	
		900	284/6T	01509ET3H286T-W22	$5,368	N1	428	1.25	15.5	90.2	27.929	575	
20	15	3600	254/6T	02036ET3E256T-W22	$2,382	N1	317	1.25	23.2	91.0	24.945	230/460	
		3600	254/6T	02036ET3H256T-W22	$2,382	N1	323	1.25	18.6	91.0	24.945	575	
		1800	254/6T	02018ET3E256T-W22	$2,201	N1	386	1.25	24.1	93.0	24.945	230/460	
		1800	254/6T	02018ET3H256T-W22	$2,201	N1	396	1.25	19.3	93.0	24.945	575	
		1800	254/6T	02018ET3P256T-W22	$2,201	N1	397	1.25	55.4	93.0	24.945	200	
		1200	284/6T	02012ET3E286T-W22	$3,962	N1	432	1.25	24.2	91.7	27.929	230/460	
		1200	284/6T	02012ET3H286T-W22	$3,962	N1	447	1.25	19.4	91.7	27.929	575	
		900	284/6T	02009ET3E286T-W22	$5,854	N1	556	1.00	28.2	90.2	27.929	230/460	1;12;37
		900	324/6T	02009ET3E324T-W22	$6,339	N1	548	1.25	28.3	91.0	31.116	230/460	
		900	324/6T	02009ET3H324T-W22	$6,339	N1	546	1.25	22.6	91.0	31.116	575	

continued on next page

Please refer to inside back cover for description of "NOTES"

For detailed specifications, data sheets, drawings and performance curves visit http://www.weg.net

Data subject to change without notice.

TEFC - Foot Mount - *continued*

HP	kW	RPM	Frame	Catalog Number	List Price	Mult. Symbol	Approx. Shipping Weight (lbs)	Service Factor	FL Amps @ High	FL. Eff (%)	"C" Dimension (in)	Voltage (V)	Notes
25	18.5	3600	284/6TS	02536ET3E284TS-W22	$2,998	N1	391	1.25	28.5	91.7	26.557	230/460	
		3600	284/6TS	02536ET3H284TS-W22	$2,998	N1	405	1.25	22.8	91.7	26.557	575	
		1800	284/6TS	02518ET3E284TS-W22	$2,743	N1	438	1.25	29.5	93.6	26.557	230/460	
		1800	284/6T	02518ET3E284T-W22	$2,743	N1	408	1.25	29.5	93.6	27.929	230/460	
		1800	284/6T	02518ET3H284T-W22	$2,743	N1	439	1.25	23.6	93.6	27.929	575	
		1200	324/6T	02512ET3E324T-W22	$4,737	N1	569	1.25	30.4	93.0	31.116	230/460	
		1200	324/6T	02512ET3H324T-W22	$4,737	N1	583	1.25	24.3	93.0	31.116	575	
		900	324/6T	02509ET3E326T-W22	$7,315	N1	593	1.25	35.9	91.0	31.116	230/460	
		900	324/6T	02509ET3H326T-W22	$7,315	N1	593	1.25	28.7	91.0	31.116	575	
30	22	3600	284/6TS	03036ET3E286TS-W22	$3,561	N1	408	1.25	33.8	91.7	26.557	230/460	
		3600	284/6TS	03036ET3H286TS-W22	$3,561	N1	425	1.25	27.0	91.7	26.557	575	
		1800	284/6TS	03018ET3E286TS-W22	$3,223	N1	476	1.25	35.1	93.6	26.557	230/460	
		1800	284/6T	03018ET3E286T-W22	$3,223	N1	461	1.25	35.1	93.6	27.929	230/460	
		1800	284/6T	03018ET3H286T-W22	$3,223	N1	476	1.25	28.1	93.6	27.929	575	
		1200	324/6T	03012ET3E326T-W22	$5,273	N1	530	1.25	36.2	93.0	31.116	230/460	
		1200	324/6T	03012ET3H326T-W22	$5,273	N1	627	1.25	29.0	93.0	31.116	575	
		900	364/5T	03009ET3E364T-W22	$11,215	N1	899	1.25	37.0	92.4	34.251	230/460	
40	30	3600	324/6TS	04036ET3E324TS-W22	$4,725	N1	546	1.25	45.8	92.4	29.616	230/460	
		3600	324/6TS	04036ET3H324TS-W22	$4,725	N1	589	1.25	36.6	92.4	29.616	575	
		1800	324/6TS	04018ET3E324TS-W22	$4,178	N1	613	1.25	47.1	94.1	31.116	230/460	
		1800	324/6T	04018ET3E324T-W22	$4,178	N1	591	1.25	47.1	94.1	31.116	230/460	
		1800	324/6T	04018ET3H324T-W22	$4,178	N1	614	1.25	37.7	94.1	31.116	575	
		1800	324/6T	04018ET3P324T-W22	$4,178	N1	625	1.25	108	94.1	31.116	200	
		1200	364/5T	04012ET3E364T-W22	$7,284	N1	964	1.25	46.5	94.1	34.251	230/460	
		1200	364/5T	04012ET3H364T-W22	$7,284	N1	904	1.25	37.2	94.1	34.251	575	
		900	364/5T	04009ET3E365T-W22	$12,194	N1	954	1.25	50.3	92.4	34.251	230/460	
50	37	3600	324/6TS	05036ET3E326TS-W22	$5,316	N1	587	1.25	56.1	93.0	29.616	230/460	
		3600	324/6TS	05036ET3H326TS-W22	$5,316	N1	610	1.25	44.9	93.0	29.616	575	
		1800	324/6TS	05018ET3E326TS-W22	$5,100	N1	637	1.25	59.2	94.5	31.116	230/460	
		1800	324/6T	05018ET3E326T-W22	$5,100	N1	585	1.25	59.2	94.5	31.116	230/460	
		1800	324/6T	05018ET3H326T-W22	$5,100	N1	634	1.25	47.4	94.5	31.116	575	
		1200	364/5T	05012ET3E365T-W22	$8,518	N1	914	1.25	57.4	94.1	34.251	230/460	
		1200	364/5T	05012ET3H365T-W22	$8,518	N1	1026	1.25	45.9	94.1	34.251	575	
		900	404/5T	05009ET3E404T-W22	$17,648	N1	1214	1.25	60.0	93.0	39.73	230/460	
60	45	3600	364/5TS	06036ET3E364TS-W22	$7,552	N1	855	1.25	67.0	93.6	32.338	230/460	
		3600	364/5TS	06036ET3G364TS-W22	$7,552	N1	961	1.25	67.0	93.6	32.338	460	
		3600	364/5TS	06036ET3H364TS-W22	$7,552	N1	968	1.25	53.6	93.6	32.338	575	
		1800	364/5TS	06018ET3E364TS-W22	$7,389	N1	1026	1.25	68.3	95.0	32.338	230/460	
		1800	364/5T	06018ET3E364T-W22	$7,389	N1	946	1.25	68.3	95.0	34.251	230/460	
		1800	364/5T	06018ET3G364T-W22	$7,389	N1	1025	1.25	68.3	95.0	34.251	460	
		1800	364/5T	06018ET3H364T-W22	$7,389	N1	1033	1.25	54.6	95.0	34.251	575	
		1200	404/5T	06012ET3E404T-W22	$10,497	N1	1252	1.25	69.5	94.5	39.730	230/460	
		1200	404/5T	06012ET3ERB404T-W22	$10,497	N1	1262	1.25	69.5	94.5	39.730	230/460	14
		1200	404/5T	06012ET3G404T-W22	$10,497	N1	1213	1.25	69.5	94.5	39.730	460	
		1200	404/5T	06012ET3H404T-W22	$10,497	N1	1255	1.25	55.6	94.5	39.730	575	
		900	404/5T	06009ET3E405T-W22	$20,443	N1	1263	1.25	73.0	93.0	39.730	230/460	

continued on next page

Please refer to inside back cover for description of "NOTES"

For detailed specifications, data sheets, drawings and performance curves visit http:// www.weg.net

GENERAL PURPOSE

TEFC - Foot Mount - *continued*

HP	kW	RPM	Frame	Catalog Number	List Price	Mult. Symbol	Approx. Shipping Weight (lbs)	Service Factor	FL Amps @ High	FL. Eff (%)	"C" Dimension (in)	Voltage (V)	Notes
75	55	3600	364/5TS	07536ET3E365TS-W22	$9,091	N1	900	1.25	81.9	93.6	32.338	230/460	
		3600	364/5TS	07536ET3G365TS-W22	$9,091	N1	963	1.25	81.9	93.6	32.338	460	
		3600	364/5TS	07536ET3H365TS-W22	$9,091	N1	967	1.25	65.5	93.6	32.338	575	
		1800	364/5TS	07518ET3E365TS-W22	$8,705	N1	988	1.25	84.1	95.4	32.338	230/460	
		1800	364/5T	07518ET3E365T-W22	$8,705	N1	969	1.25	84.1	95.4	34.251	230/460	
		1800	364/5T	07518ET3G365T-W22	$8,705	N1	1045	1.25	84.1	95.4	34.251	460	
		1800	364/5T	07518ET3H365T-W22	$8,705	N1	1050	1.25	67.3	95.4	34.251	575	
		1200	404/5T	07512ET3E405T-W22	$12,058	N1	1303	1.25	84.9	94.5	39.730	230/460	
		1200	404/5T	07512ET3ERB405T-W22	$12,058	N1	1262	1.25	84.9	94.5	39.730	230/460	14
		1200	404/5T	07512ET3G405T-W22	$12,058	N1	1298	1.25	84.9	94.5	39.730	460	
		1200	404/5T	07512ET3GRB405T-W22	$12,058	N1	1309	1.25	84.9	94.5	39.730	460	14
		1200	404/5T	07512ET3H405T-W22	$12,058	N1	1303	1.25	67.9	94.5	39.730	575	
		900	444/5T	07509ET3E444T-W22	$23,334	N1	1665	1.25	93.0	93.6	45.157	230/460	
		900	444/5T	07509ET3QRB444TF2-W2	$23,334	N1	1707	1.25	93.0	93.6	45.157	460	14
100	75	3600	404/5TS	10036ET3E405TS-W22	$12,002	N1	1024	1.25	110	94.1	36.732	230/460	
		3600	404/5TS	10036ET3G405TS-W22	$12,002	N1	1176	1.25	110	94.1	36.732	460	
		3600	404/5TS	10036ET3H405TS-W22	$12,002	N1	1182	1.25	88.0	94.1	36.732	575	
		1800	404/5TS	10018ET3E405TS-W22	$11,689	N1	1266	1.25	111	95.4	36.732	230/460	
		1800	404/5T	10018ET3E405T-W22	$11,689	N1	1190	1.25	111	95.4	39.730	230/460	
		1800	404/5T	10018ET3ERB405T-W22	$11,689	N1	1239	1.25	111	95.4	39.730	230/460	14
		1800	404/5T	10018ET3G405T-W22	$11,689	N1	1280	1.25	111	95.4	39.730	460	
		1800	404/5T	10018ET3GRB405T-W22	$11,689	N1	1199	1.25	111	95.4	39.730	460	14
		1800	404/5T	10018ET3H405T-W22	$11,689	N1	1283	1.25	88.8	95.4	39.730	575	
		1800	404/5T	10018ET3HRB405T-W22	$11,689	N1	1294	1.25	88.8	95.4	39.730	575	14
		1200	444/5T	10012ET3E444T-W22	$15,631	N1	1786	1.25	121	95.0	45.157	230/460	
		1200	444/5T	10012ET3ERB444T-W22	$15,631	N1	1859	1.25	121	95.0	45.157	230/460	14
		1200	444/5T	10012ET3G444T-W22	$15,631	N1	1840	1.25	121	95.0	45.157	460	
		1200	444/5T	10012ET3GRB444T-W22	$15,631	N1	1854	1.25	121	95.0	45.157	460	14
		1200	444/5T	10012ET3H444T-W22	$15,631	N1	1837	1.25	96.8	95.0	45.157	575	
		900	444/5T	10009ET3E445T-W22	$26,988	N1	1900	1.25	127	94.1	45.157	230/460	
		900	444/5T	10009ET3G445T-W22	$26,988	N1	1939	1.25	127	94.1	45.157	460	

continued on next page

Please refer to inside back cover for description of "NOTES"

For detailed specifications, data sheets, drawings and performance curves visit http://www.weg.net

Data subject to change without notice.

TEFC - Foot Mount - *continued*

HP	kW	RPM	Frame	Catalog Number	List Price	Mult. Symbol	Approx. Shipping Weight (lbs)	Service Factor	FL Amps @ High	FL. Eff (%)	"C" Dimension (in)	Voltage (V)	Notes
125	90	3600	444/5TS	12536ET3E444TS-W22	$15,350	N1	1802	1.15	134	95.0	41.407	230/460	
		3600	444/5TS	12536ET3G444TS-W22	$15,350	N1	1798	1.15	134	95.0	41.407	460	
		3600	444/5TS	12536ET3H444TS-W22	$15,350	N1	1795	1.15	107	95.0	41.407	575	
		1800	444/5TS	12518ET3E444TS-W22	$14,748	N1	1627	1.15	139	95.4	41.407	230/460	
		1800	444/5T	12518ET3E444T-W22	$14,748	N1	1699	1.15	139	95.4	45.157	230/460	
		1800	444/5T	12518ET3ERB444T-W22	$14,748	N1	1730	1.15	139	95.4	45.157	230/460	14
		1800	444/5T	12518ET3G444T-W22	$14,748	N1	1710	1.15	139	95.4	45.157	460	
		1800	444/5T	12518ET3GRB444T-W22	$14,748	N1	1736	1.15	139	95.4	45.157	460	14
		1800	444/5T	12518ET3H444T-W22	$14,748	N1	1815	1.15	111	95.4	45.157	575	
		1200	444/5T	12512ET3E445T-W22	$17,947	N1	1980	1.15	143	95.0	45.157	230/460	
		1200	444/5T	12512ET3ERB445T-W22	$17,947	N1	1993	1.15	143	95.0	45.157	230/460	14
		1200	444/5T	12512ET3G445T-W22	$17,947	N1	1893	1.15	143	95.0	45.157	460	
		1200	444/5T	12512ET3GRB445T-W22	$17,947	N1	1996	1.15	143	95.0	45.157	460	14
		1200	444/5T	12512ET3H445T-W22	$17,947	N1	1974	1.15	114	95.0	45.157	575	
		900	445/7T	12509ET3G447T-W22	$28,175	N1	2235	1.15	151	94.5	48.701	460	
150	110	3600	444/5TS	15036ET3E445TS-W22	$18,882	N1	1899	1.15	161	95.0	41.407	230/460	
		3600	444/5TS	15036ET3G445TS-W22	$18,882	N1	1908	1.15	161	95.0	41.407	460	
		1800	444/5TS	15018ET3G445TS-W22	$17,420	N1	1869	1.15	170	95.8	41.407	460	
		1800	444/5T	15018ET3E445T-W22	$17,420	N1	1918	1.15	170	95.8	45.157	230/460	
		1800	444/5T	15018ET3G445T-W22	$17,420	N1	1905	1.15	170	95.8	45.157	460	
		1800	444/5T	15018ET3GRB445T-W22	$17,420	N1	1853	1.15	170	95.8	45.157	460	14
		1800	444/5T	15018ET3H445T-W22	$17,420	N1	1958	1.15	136	95.8	45.157	575	
		1800	444/5T	15018ET3HRB445T-W22	$17,420	N1	2034	1.15	136	95.8	45.157	575	14
		1200	445/7T	15012ET3E447T-W22	$20,639	N1	2354	1.15	176	95.8	48.701	230/460	
		1200	445/7T	15012ET3G447T-W22	$20,639	N1	2472	1.15	176	95.8	48.701	460	
		1200	445/7T	15012ET3GRB447T-W22	$20,639	N1	2371	1.15	176	95.8	48.701	460	14
		1200	445/7T	15012ET3H447T-W22	$20,639	N1	2467	1.15	141	95.8	48.701	575	
		900	447/9T	15009ET3G449T-W22	$30,677	N1	3079	1.15	185	94.5	56.338	460	

continued on next page

Please refer to inside back cover for description of "NOTES"

For detailed specifications, data sheets, drawings and performance curves visit http:// www.weg.net

GENERAL PURPOSE

TEFC - Foot Mount - *continued*

HP	kW	RPM	Frame	Catalog Number	List Price	Mult. Symbol	Approx. Shipping Weight (lbs)	Service Factor	FL Amps @ High	FL. Eff (%)	"C" Dimension (in)	Voltage (V)	Notes
200	150	3600	445/7TS	20036ET3E447TS-W22	$23,562	N1	2224	1.15	219	95.4	44.951	230/460	
		3600	445/7TS	20036ET3G447TS-W22	$23,562	N1	2046	1.15	219	95.4	44.951	460	
		3600	504/5S	20036ET3G504S-W22	$23,562	N1	2373	1.15	222	95.4	48.215	460	
		1800	445/7TS	20018ET3G447TS-W22	$21,098	N1	2138	1.15	230	96.2	44.951	460	
		1800	445/7T	20018ET3E447T-W22	$21,098	N1	2349	1.15	230	96.2	48.701	230/460	
		1800	445/7T	20018ET3G447T-W22	$21,098	N1	2224	1.15	230	96.2	48.701	460	
		1800	445/7T	20018ET3GRB447T-W22	$21,098	N1	2209	1.15	230	96.2	48.701	460	14
		1800	445/7T	20018ET3H447T-W22	$21,098	N1	2477	1.15	184	96.2	48.701	575	
		1800	445/7T	20018ET3HRB447T-W22	$21,098	N1	1850	1.15	184	96.2	48.701	575	14
		1800	504/5	20018ET3G504-W22	$21,098	N1	2621	1.15	228	96.2	54.095	460	
		1200	445/7T	20012ET3G447T-W22	$25,133	N1	2406	1.15	237	95.8	48.701	460	
		1200	445/7T	20012ET3GRB447T-W22	$25,133	N1	2588	1.15	237	95.8	48.701	460	14
		1200	447/9T	20012ET3E449T-W22	$25,255	N1	2495	1.15	237	95.8	56.338	230/460	
		1200	447/9T	20012ET3G449T-W22	$25,255	N1	3044	1.15	237	95.8	56.338	460	
		1200	447/9T	20012ET3GRB449T-W22	$25,255	N1	2940	1.15	237	95.8	56.338	460	14
		1200	447/9T	20012ET3H449T-W22	$25,255	N1	2933	1.15	190	95.8	56.338	575	
		1200	504/5	20012ET3G505-W22	$25,133	N1	2467	1.15	237	95.8	54.095	460	
		900	447/9T	20009ET3G449T-W22	$49,899	N1	3255	1.15	254	95.0	56.338	460	
250	185	3600	445/7TS	25036ET3G447TS-W22	$29,846	N1	2535	1.15	266	95.8	44.951	460	
		3600	447/9TS	25036ET3G449TS-W22	$33,173	N1	2730	1.15	266	95.8	52.588	460	
		1800	445/7TS	25018ET3G447TS-W22	$27,189	N1	2709	1.15	281	96.2	44.951	460	
		1800	445/7T	25018ET3H447T-W22	$26,716	N1	2710	1.15	225	96.2	48.701	575	
		1800	445/7TS	25018ET3H447TS-W22	$27,189	N1	2896	1.15	225	96.2	44.951	575	
		1800	445/7T	25018ET3G447T-W22	$26,716	N1	2446	1.15	281	96.2	48.701	460	
		1800	445/7T	25018ET3GRB447T-W22	$26,716	N1	2554	1.15	281	96.2	48.701	460	14
		1800	445/7T	25018ET3HRB447T-W22	$26,716	N1	2414	1.15	225	96.2	48.701	575	14
		1800	447/9T	25018ET3G449T-W22	$26,803	N1	2879	1.15	281	96.2	56.338	460	
		1800	447/9T	25018ET3GRB449T-W22	$26,803	N1	2815	1.15	281	96.2	56.338	460	14
		1200	447/9T	25012ET3E449T-W22	$35,555	N1	3217	1.15	292	95.8	56.338	230/460	
		1200	447/9T	25012ET3G449T-W22	$35,555	N1	3090	1.15	292	95.8	56.338	460	
		1200	447/9T	25012ET3GRB449T-W22	$35,555	N1	3224	1.15	292	95.8	56.338	460	14
		1200	447/9T	25012ET3H449T-W22	$35,555	N1	3206	1.15	234	95.8	56.338	575	
		1200	586/7	25012ET3G586/7-W22	$39,631	N1	3769	1.15	299	95.8	61.902	460	43
		900	L447/9T	25009ET3G449T-W22	$56,168	N1	3590	1.15	308	95.4	57.181	460	43
300	220	3600	447/9TS	30036ET3G449TS-W22	$38,269	N1	2987	1.15	320	95.8	52.588	460	
		1800	447/9TS	30018ET3G449TS-W22	$31,384	N1	2894	1.15	330	96.2	52.588	460	44
		1800	447/9T	30018ET3G449T-W22	$31,384	N1	2888	1.15	330	96.2	56.338	460	
		1800	447/9T	30018ET3GRB449T-W22	$31,384	N1	2992	1.15	330	96.2	56.338	460	14
		1200	447/9T	30012ET3G449T-W22	$38,437	N1	3178	1.00	356	95.8	56.338	460	37
		1200	447/9T	30012ET3GKD449T-W22	$38,437	K1	3313	1.00	356	95.8	56.338	460	14
		1200	586/7	30012ET3G586/7-W22	$44,301	N1	4061	1.15	356	95.8	61.902	460	43
		900	L447/9T	30009ET3G449T-W22	$58,655	N1	3826	1.15	371	95.4	57.181	460	19;43

continued on next page

Please refer to inside back cover for description of "NOTES"

For detailed specifications, data sheets, drawings and performance curves visit http://www.weg.net

Data subject to change without notice.

TEFC - Foot Mount - *continued*

HP	kW	RPM	Frame	Catalog Number	List Price	Mult. Symbol	Approx. Shipping Weight (lbs)	Service Factor	FL Amps @ High	FL. Eff (%)	"C" Dimension (in)	Voltage (V)	Notes
350	260	3600	447/9TS	35036ET3G449TS-W22	$43,805	N1	3120	1.15	377	96.2	52.588	460	
		1800	447/9TS	35018ET3G449TS-W22	$36,517	N1	3123	1.15	394	96.2	52.588	460	44
		1800	447/9T	35018ET3G449T-W22	$36,517	N1	3168	1.15	394	96.2	56.338	460	
		1800	447/9T	35018ET3GRB449T-W22	$36,517	N1	2941	1.15	394	96.2	56.338	460	14
		1200	L447/9T	35012ET3G449T-W22	$47,633	N1	3781	1.15	415	95.8	57.181	460	37;43
		1200	L447/9T	35012ET3GRB449T-W22	$47,633	N1	3800	1.15	415	95.8	57.181	460	14;37;43
		900	586/7	35009ET3G586/7-W22	$64,873	N1	5028	1.00	426	95.8	61.902	460	1;43
400	300	3600	L447/9TS	40036ET3G449TS-W22	$44,605	N1	3361	1.15	432	95.8	53.431	460	43
		1800	L447/9TS	40018ET3G449TS-W22	$43,805	N1	3328	1.15	445	96.2	53.431	460	43
		1800	L447/9T	40018ET3G449T-W22	$43,805	N1	3416	1.15	445	96.2	57.181	460	43
		1800	L447/9T	40018ET3GRB449T-W22	$43,805	N1	3404	1.15	445	96.2	57.181	460	14;43
		1800	L447/9T	40018ET3H449T-W22	$43,805	N1	3400	1.15	356	96.2	57.181	575	43
		1200	L447/9T	40012ET3G449T-W22	$52,307	N1	3720	1.00	477	95.8	57.181	460	19;37;43
		1200	L447/9T	40012ET3GRB449T-W22	$52,307	N1	3827	1.00	477	95.8	57.181	460	14;37;43
		1200	586/7	40012ET3G586/7-W22	$56,201	N1	4663	1.15	483	96.2	61.902	460	43
		900	588/9	40009ET3G588/9-W22	$66,123	N1	3308	1.00	498	95.7	69.381	460	1;43
450	330	3600	L447/9TS	45036ET3G449TS-W22	$49,610	N1	3537	1.00	475	95.8	53.431	460	1;43
		1800	L447/9T	45018ET3G449T-W22	$48,010	N1	3681	1.15	501	96.2	57.181	460	43
		1800	L447/9T	45018ET3GRB449T-W22	$48,010	N1	3657	1.15	501	96.2	57.181	460	14;43
		1200	586/7	45012ET3G586/7-W22	$62,251	N1	4957	1.00	532	96.2	61.902	460	1;43
		1200	586/7	45012ET3GRB586/7-W22	$62,251	N1	5248	1.00	532	96.2	61.902	460	1;14;43
		900	588/9	45009ET3G588/9-W22	$68,715	N1	5915	1.00	534	95.8	69.381	460	1;43;44
500	370	3600	586/7S	50036ET3G586/7S-W22	$56,305	N1	4649	1.15	530	96.2	55.027	460	43;44
		1800	L447/9T	50018ET3G449T-W22	$50,594	N1	3889	1.00	561	96.2	57.181	460	1;19;43
		1800	L447/9T	50018ET3GRB449T-W22	$50,594	N1	5424	1.00	561	96.2	57.181	460	1;14;19;43
		1200	586/7	50012ET3G586/7-W22	$62,962	N1	4916	1.00	603	96.2	61.902	460	1;44
600	450	3600	588/9S	60036ET3G588/9S-W22	$64,635	N1	5142	1.00	650	96.5	62.506	460	1;43;44
		1800	586/7	60018ET3G586/7-W22	$60,316	N1	4963	1.00	665	96.5	61.902	460	1;43;44
		1200	588/9	60012ET3G588/9-W22	$71,374	N1	6168	1.00	743	96.2	69.381	460	1;43;44
650	480	3600	588/9S	65036ET3G588/9S-W22	$66,835	N1	4805	1.00	685	96.6	62.506	460	1;43;44
		1800	588/9	65018ET3G588/9-W22	$66,701	N1	5597	1.00	734	96.6	69.381	460	1;43;44
700	515	3600	588/9S	70036ET3G588/9S-W22	$71,254	N1	5680	1.00	736	96.6	62.506	460	1;19;43;44
		1800	588/9	70018ET3G588/9-W22	$71,185	N1	5940	1.00	788	96.6	69.381	460	1;43;44
750	550	1800	588/9	75018ET3G588/9-W22	$74,025	N1	6154	1.00	840	96.7	69.381	460	1;43;44

Please refer to inside back cover for description of "NOTES"

For detailed specifications, data sheets, drawings and performance curves visit http:// www.weg.net

Severe Duty - Three-Phase Motors

GENERAL PURPOSE

TEFC - C-Face - Foot Mount

HP	kW	RPM	Frame	Catalog Number	List Price	Mult. Symbol	Approx. Shipping Weight (lbs)	Service Factor	FL Amps @ High	FL. Eff (%)	"C" Dimension (in)	Voltage (V)	Notes
1	0.75	3600	143/5TC	00136ET3E143TC-W22	$566	N1	47	1.25	1.44	81.5	13.358	230/460	
		1800	143/5TC	00118ET3E143TC-W22	$555	N1	50	1.25	1.47	85.5	13.358	230/460	
		1800	143/5TC	00118ET3H143TC-W22	$555	N1	50	1.25	1.18	85.5	13.358	575	
		1200	143/5TC	00112ET3E145TC-W22	$636	N1	57	1.25	1.73	82.5	13.358	230/460	
1.5	1.1	3600	143/5TC	00156ET3E143TC-W22	$571	N1	52	1.25	1.96	84.0	13.358	230/460	
		3600	143/5TC	00156ET3H143TC-W22	$571	N1	51	1.25	1.57	84.0	13.358	575	
		1800	143/5TC	00158ET3E145TC-W22	$579	N1	56	1.25	2.02	86.5	13.358	230/460	
		1800	143/5TC	00158ET3H145TC-W22	$579	N1	56	1.25	1.62	86.5	13.358	575	
		1200	182/4TC	00152ET3E182TC-W22	$792	N1	101	1.25	2.54	87.5	15.860	230/460	
2	1.5	3600	143/5TC	00236ET3E145TC-W22	$619	N1	56	1.25	2.56	85.5	13.358	230/460	
		3600	143/5TC	00236ET3H145TC-W22	$619	N1	56	1.25	2.05	85.5	13.358	575	
		1800	143/5TC	00218ET3E145TC-W22	$640	N1	53	1.25	2.76	86.5	13.358	230/460	
		1800	143/5TC	00218ET3H145TC-W22	$640	N1	57	1.25	2.21	86.5	13.358	575	
		1200	182/4TC	00212ET3E184TC-W22	$857	N1	112	1.25	3.22	88.5	15.860	230/460	39
3	2.2	3600	182/4TC	00336ET3E182TC-W22	$802	N1	103	1.25	3.63	86.5	15.860	230/460	
		3600	182/4TC	00336ET3H182TC-W22	$802	N1	103	1.25	2.90	86.5	15.860	575	
		1800	182/4TC	00318ET3E182TC-W22	$700	N1	96	1.25	3.91	89.5	15.860	230/460	
		1800	182/4TC	00318ET3H182TC-W22	$700	N1	98	1.25	3.13	89.5	15.860	575	
		1200	213/5TC	00312ET3E213TC-W22	$1,180	N1	166	1.25	4.41	89.5	19.517	230/460	
		900	213/5TC	00309ET3E215TC-W22	$2,166	N1	192	1.25	4.55	85.5	19.517	230/460	
5	3.7	3600	182/4TC	00536ET3E184TC-W22	$911	N1	110	1.25	5.90	88.5	15.860	230/460	
		3600	182/4TC	00536ET3H184TC-W22	$911	N1	109	1.25	4.72	88.5	15.860	575	
		1800	182/4TC	00518ET3E184TC-W22	$810	N1	107	1.25	6.45	89.5	15.860	230/460	
		1800	182/4TC	00518ET3H184TC-W22	$810	N1	108	1.25	5.16	89.5	15.860	575	
		1200	213/5TC	00512ET3E215TC-W22	$1,384	N1	183	1.25	6.83	89.5	19.517	230/460	
7.5	5.5	3600	182/4TC	00736ET3E184TC-W22	$1,112	N1	110	1.25	8.76	89.5	15.860	230/460	12
		3600	182/4TC	00736ET3H184TC-W22	$1,112	N1	109	1.25	7.01	89.5	15.860	575	
		3600	213/5TC	00736ET3E213TC-W22	$1,177	N1	166	1.25	8.76	89.5	19.517	230/460	
		3600	213/5TC	00736ET3H213TC-W22	$1,177	N1	166	1.25	7.01	89.5	19.517	575	
		1800	213/5TC	00718ET3E213TC-W22	$1,141	N1	174	1.25	9.18	91.7	19.517	230/460	
		1800	213/5TC	00718ET3H213TC-W22	$1,141	N1	178	1.25	7.34	91.7	19.517	575	
		1200	254/6TC	00712ET3E254TC-W22	$2,134	N1	321	1.25	9.48	91.0	24.945	230/460	
		900	254/6TC	00709ET3E256TC-W22	$3,726	N1	341	1.25	11.1	87.5	24.945	230/460	
10	7.5	3600	213/5TC	01036ET3E215TC-W22	$1,383	N1	178	1.25	11.6	90.2	19.517	230/460	
		3600	213/5TC	01036ET3H215TC-W22	$1,383	N1	183	1.25	9.28	90.2	19.517	575	
		1800	213/5TC	01018ET3E215TC-W22	$1,325	N1	183	1.25	12.4	91.7	19.517	230/460	
		1800	213/5TC	01018ET3H215TC-W22	$1,325	N1	191	1.25	9.92	91.7	19.517	575	
		1200	254/6TC	01012ET3E256TC-W22	$2,465	N1	329	1.25	12.9	91.0	24.945	230/460	
15	11	3600	213/5TC	01536ET3E215TC-W22	$1,748	N1	187	1.25	17.0	91.0	19.517	230/460	12
		3600	254/6TC	01536ET3E254TC-W22	$1,893	N1	295	1.25	17.2	91.0	24.945	230/460	
		3600	254/6TC	01536ET3H254TC-W22	$1,893	N1	302	1.25	13.8	91.0	24.945	575	
		1800	254/6TC	01518ET3E254TC-W22	$1,917	N1	340	1.25	18.0	92.4	24.945	230/460	
		1800	254/6TC	01518ET3H254TC-W22	$1,917	N1	351	1.25	14.4	92.4	24.945	575	
		1200	284/6TC	01512ET3E284TC-W22	$3,388	N1	430	1.25	17.9	91.7	27.929	230/460	
		1200	284/6TC	01512ET3H284TC-W22	$3,388	N1	428	1.25	14.3	91.7	27.929	575	

continued on next page

Please refer to inside back cover for description of "NOTES"

For detailed specifications, data sheets, drawings and performance curves visit http://www.weg.net

Data subject to change without notice.

TEFC - C-Face - Foot Mount - *continued*

HP	kW	RPM	Frame	Catalog Number	List Price	Mult. Symbol	Approx. Shipping Weight (lbs)	Service Factor	FL Amps @ High	FL. Eff (%)	"C" Dimension (in)	Voltage (V)	Notes
20	15	3600	254/6TC	02036ET3E256TC-W22	$2,451	N1	318	1.25	23.2	91.0	24.945	230/460	
		3600	254/6TC	02036ET3H256TC-W22	$2,451	N1	327	1.25	18.6	91.0	24.945	575	
		1800	254/6TC	02018ET3E256TC-W22	$2,270	N1	389	1.25	24.1	93.0	24.945	230/460	
		1800	254/6TC	02018ET3H256TC-W22	$2,270	N1	401	1.25	19.3	93.0	24.945	575	
		1200	284/6TC	02012ET3E286TC-W22	$4,060	N1	457	1.25	24.2	91.7	27.929	230/460	
25	18.5	3600	284/6TSC	02536ET3E284TSC-W22	$3,096	N1	416	1.25	28.5	91.7	26.557	230/460	
		3600	284/6TSC	02536ET3H284TSC-W22	$3,096	N1	413	1.25	22.8	91.7	26.557	575	
		1800	284/6TC	02518ET3E284TC-W22	$2,840	N1	418	1.25	29.5	93.6	27.929	230/460	
		1800	284/6TC	02518ET3H284TC-W22	$2,840	N1	447	1.25	23.6	93.6	27.929	575	
		1200	324/6TC	02512ET3E324TC-W22	$4,858	N1	601	1.25	30.4	93.0	31.116	230/460	
30	22	3600	284/6TSC	03036ET3E286TSC-W22	$3,659	N1	433	1.25	33.8	91.7	26.557	230/460	
		3600	284/6TSC	03036ET3H286TSC-W22	$3,659	N1	433	1.25	27.0	91.7	26.557	575	
		1800	284/6TC	03018ET3E286TC-W22	$3,321	N1	466	1.25	35.1	93.6	27.929	230/460	
		1800	284/6TC	03018ET3H286TC-W22	$3,321	N1	484	1.25	28.1	93.6	27.929	575	
		1200	324/6TC	03012ET3E326TC-W22	$5,394	N1	645	1.25	36.2	93.0	31.116	230/460	
40	30	3600	324/6TSC	04036ET3E324TSC-W22	$4,845	N1	606	1.25	45.8	92.4	29.616	230/460	
		3600	324/6TSC	04036ET3H324TSC-W22	$4,845	N1	605	1.25	36.6	92.4	29.616	575	
		1800	324/6TSC	04018ET3E324TSC-W22	$4,300	N1	629	1.25	47.1	94.1	29.616	230/460	
		1800	324/6TC	04018ET3E324TC-W22	$4,300	N1	606	1.25	47.1	94.1	31.116	230/460	
		1800	324/6TC	04018ET3H324TC-W22	$4,300	N1	630	1.25	37.7	94.1	31.116	575	
		1200	364/5TC	04012ET3E364TC-W22	$7,576	N1	1032	1.25	46.5	94.1	34.251	230/460	
50	37	3600	324/6TSC	05036ET3E326TSC-W22	$5,437	N1	628	1.25	56.1	93.0	29.616	230/460	
		1800	324/6TSC	05018ET3E326TSC-W22	$5,221	N1	614	1.25	59.2	94.5	29.616	230/460	
		1800	324/6TC	05018ET3E326TC-W22	$5,221	N1	625	1.25	59.2	94.5	31.116	230/460	
		1800	324/6TC	05018ET3H326TC-W22	$5,221	N1	651	1.25	47.4	94.5	31.116	575	
		1200	364/5TC	05012ET3E365TC-W22	$8,960	N1	1048	1.25	57.4	94.1	34.251	230/460	
60	45	3600	364/5TSC	06036ET3E364TSC-W22	$7,994	N1	990	1.25	67.0	93.6	32.338	230/460	
		3600	364/5TSC	06036ET3H364TSC-W22	$7,994	N1	992	1.25	53.6	93.6	32.338	575	
		1800	364/5TC	06018ET3E364TC-W22	$7,831	N1	961	1.25	68.3	95.0	34.251	230/460	
		1800	364/5TC	06018ET3H364TC-W22	$7,831	N1	1060	1.25	54.6	95.0	34.251	575	
75	55	3600	364/5TSC	07536ET3E365TSC-W22	$9,533	N1	993	1.25	81.9	93.6	32.338	230/460	
		1800	364/5TC	07518ET3E365TC-W22	$9,148	N1	1024	1.25	84.1	95.4	34.251	230/460	
		1800	364/5TC	07518ET3H365TC-W22	$9,148	N1	1075	1.25	67.3	95.4	34.251	575	
		1200	404/5TC	07512ET3H405TC-W22	$12,549	N1	1337	1.25	67.9	94.5	39.730	575	
100	75	1800	404/5TSC	10018ET3E405TSC-W22	$12,179	N1	1256	1.25	111	95.4	36.732	230/460	
		1800	404/5TC	10018ET3E405TC-W22	$12,179	N1	1256	1.25	111	95.4	39.730	230/460	
		1800	404/5TC	10018ET3H405TC-W22	$12,179	N1	1318	1.25	88.8	95.4	39.730	575	
125	90	1800	444/5TSC	12518ET3G444TSC-W22	$16,218	N1	1759	1.15	139	95.4	41.407	460	
		1800	444/5TC	12518ET3E444TC-W22	$16,218	N1	1887	1.15	139	95.4	45.157	230/460	
		1800	444/5TC	12518ET3G444TC-W22	$16,218	N1	1851	1.15	139	95.4	45.157	460	
		1800	444/5TC	12518ET3H444TC-W22	$16,218	N1	1851	1.15	111	95.4	45.157	575	
150	110	1800	444/5TC	15018ET3E445TC-W22	$18,025	N1	1919	1.15	170	95.8	45.157	230/460	
		1800	444/5TC	15018ET3G445TC-W22	$18,025	N1	1997	1.15	170	95.8	45.157	460	

continued on next page

Please refer to inside back cover for description of "NOTES"

For detailed specifications, data sheets, drawings and performance curves visit http:// www.weg.net

GENERAL PURPOSE

TEFC - C-Face - Foot Mount - *continued*

HP	kW	RPM	Frame	Catalog Number	List Price	Mult. Symbol	Approx. Shipping Weight (lbs)	Service Factor	FL Amps @ High	FL. Eff (%)	"C" Dimension (in)	Voltage (V)	Notes
200	150	1800	445/7TC	20018ET3G447TC-W22	$21,704	N1	2523	1.15	230	96.2	48.701	460	
250	185	1800	445/7TSC	25018ET3G447TSC-W22	$34,280	N1	2361	1.15	281	96.2	44.951	460	
		1800	445/7TSC	25018ET3Q447TSC-W22	$27,322	N1	2836	1.15	281	96.2	44.951	460	
300	220	1800	447/9TC	30018ET3G449TC-W22	$31,990	N1	3069	1.15	330	96.2	56.338	460	

TEFC - C-Face - Footless

HP	kW	RPM	Frame	Catalog Number	List Price	Mult. Symbol	Approx. Shipping Weight (lbs)	Service Factor	FL Amps @ High	FL. Eff (%)	"C" Dimension (in)	Voltage (V)	Notes
1	0.75	3600	143TC	00136ET3ER143TC-W22	$577	N1	44	1.25	1.44	81.5	13.065	230/460	15
		1800	143TC	00118ET3ER143TC-W22	$572	N1	47	1.25	1.47	85.5	13.065	230/460	15
		1200	145TC	00112ET3ER145TC-W22	$655	N1	56	1.25	1.73	82.5	16.197	230/460	15
1.5	1.1	3600	143TC	00156ET3ER143TC-W22	$588	N1	48	1.25	1.96	84.0	13.065	230/460	15
		1800	145TC	00158ET3ER145TC-W22	$596	N1	55	1.25	2.02	86.5	14.077	230/460	15
		1200	182TC	00152ET3ER182TC-W22	$816	N1	100	1.25	2.54	87.5	16.197	230/460	15;39
2	1.5	3600	145TC	00236ET3ER145TC-W22	$638	N1	55	1.25	2.56	85.5	14.077	230/460	15
		1800	145TC	00218ET3ER145TC-W22	$659	N1	56	1.25	2.76	86.5	14.077	230/460	15
		1200	184TC	00212ET3ER184TC-W22	$883	N1	110	1.25	3.22	88.5	17.197	230/460	15;39
3	2.2	3600	145TC	00336ET3ER145TC-W22	$677	N1	58	1.25	3.71	86.5	14.077	230/460	15
		3600	182TC	00336ET3ER182TC-W22	$826	N1	108	1.25	3.63	86.5	16.197	230/460	15;39
		1800	182TC	00318ET3ER182TC-W22	$721	N1	104	1.25	3.91	89.5	16.197	230/460	15;39
		1200	213TC	00312ET3ER213TC-W22	$1,203	N1	154	1.25	4.41	89.5	19.399	230/460	15
5	3.7	3600	184TC	00536ET3ER184TC-W22	$938	N1	115	1.25	5.90	88.5	17.197	230/460	15
		1800	184TC	00518ET3ER184TC-W22	$834	N1	113	1.25	6.45	89.5	17.197	230/460	15
		1200	215TC	00512ET3ER215TC-W22	$1,426	N1	178	1.25	6.83	89.5	20.895	230/460	15
7.5	5.5	3600	213TC	00736ET3ER213TC-W22	$1,212	N1	155	1.25	8.76	89.5	19.399	230/460	15
		1800	213TC	00718ET3ER213TC-W22	$1,175	N1	167	1.25	9.18	91.7	19.399	230/460	15
10	7.5	3600	215TC	01036ET3ER215TC-W22	$1,424	N1	179	1.25	11.6	90.2	20.895	230/460	15
		1800	215TC	01018ET3ER215TC-W22	$1,366	N1	187	1.25	12.4	91.7	20.895	230/460	15
15	11	3600	254TC	01536ET3ER254TC-W22	$1,950	N1	300	1.25	17.2	91.0	25.063	230/460	15
		1800	254TC	01518ET3ER254TC-W22	$1,975	N1	348	1.25	18.0	92.4	25.063	230/460	15
20	15	3600	256TC	02036ET3ER256TC-W22	$2,525	N1	335	1.25	23.2	91.0	26.795	230/460	15
		1800	256TC	02018ET3ER256TC-W22	$2,338	N1	407	1.25	24.1	93.0	26.795	230/460	15
25	18.5	3600	284TSC	02536ET3ER284TSC-W22	$3,187	N1	406	1.25	28.5	91.7	27.305	230/460	15
		1800	284TC	02518ET3ER284TC-W22	$2,925	N1	441	1.25	29.5	93.6	28.677	230/460	15
30	22	3600	286TSC	03036ET3ER286TSC-W22	$3,767	N1	436	1.25	33.8	91.7	28.801	230/460	15
		1800	286TC	03018ET3ER286TC-W22	$3,421	N1	489	1.25	35.1	93.6	30.173	230/460	15
		1200	326TSC	03012ET3ER326TSC-W22	$5,768	N1	732	1.25	36.2	93.0	32.254	230/460	15
40	30	3600	324TSC	04036ET3ER324TSC-W22	$4,988	N1	684	1.25	45.8	92.4	30.758	230/460	15
		1800	324TC	04018ET3ER324TC-W22	$4,429	N1	613	1.25	47.1	94.1	32.258	230/460	15
50	37	1800	326TC	05018ET3ER326TC-W22	$5,378	N1	648	1.25	59.2	94.5	33.754	230/460	15
60	45	1800	364/5TC	06018ET3ER364TC-W22	$8,053	N1	869	1.25	68.3	95.0	37.440	230/460	15
75	55	1800	364/5TC	07518ET3ER365TC-W22	$9,408	N1	1256	1.25	84.1	95.4	37.440	230/460	15

Please refer to inside back cover for description of "NOTES"

For detailed specifications, data sheets, drawings and performance curves visit http://www.weg.net

Data subject to change without notice.

Severe Duty Three-Phase Motors

IEEE 841 - THREE PHASE

TEFC - NEMA Premium®

WEG's IEEE 841 motors are specially suited for Pulp & Paper mills, Steel mills, Petrochemical Plants and diverse demanding applications requiring severe duty long life motors.

WEG's W22 cast iron platform has a superior cooling system and solid feet for cool operation and lower vibration and noise extending the life of the motor.

Standard Features:

- Class F insulation (Impregnation Resin and magnet wire are class H)
- F1 Mounted (F2 convertible). Frames 447T and up can easily be F2 converted by simply rotating the terminal box adapter
- Stainless Steel Nameplate - Laser etched with high contrast background
- All frames with regreasable ball bearings
- Class I, Div. 2, Groups A, B, C & D – T3
- Corrosion resistant Epoxy Paint system (C4 per ISO12944)

***Inverter Rated: Exceeds NEMA MG 1 Part 31 insulation requirements**
1000:1 for variable torque
20:1 for constant torque

** Frame 586/7 250HP and up 6:1 CT and 1000:1 VT*

** Insulated housing standard on L447/9T and above*

Features that make a difference:

- 1.25 Service Factor up to 100 HP
- InproSeal Bearing Isolators both ends
- Bearing protection meets IP56
- Rubber lead separator between terminal box and frame
- Vibration: 0.04 inches per second or less
- Guaranteed foot flatness to within 0.005"
- Bearing life 50,000 hours (L-10)
- Epoxy Paint system exceeds 250hrs Salt Fog test
- Interior surfaces are epoxy coated
- Non-sparking fan
- NPT Threaded terminal box
- Seamless copper lead lugs
- Seamless Stainless Steel grease extension tubes
- Automatic grease relief fittings
- IEEE 841 Link to Test Report in conduit box
- Suitable for IEEE45 USCG 259 – Marine Duty

Severe Duty - Three-Phase Motors

IEEE 841

TEFC - Foot Mount

HP	kW	RPM	Frame	Catalog Number	List Price	Mult. Symbol	Approx. Shipping Weight (lbs)	Service Factor	FL Amps @ High	FL. Eff (%)	"C" Dimension (in)	Voltage (V)	Notes
1	0.75	1800	143/5T	00118ST3QIE143T-W22	$922	I1	58	1.25	1.47	85.5	13.358	460	
		1800	143/5T	00118ST3HIE143T-W22	$922	I1	58	1.25	1.18	85.5	13.358	575	
		1200	143/5T	00112ST3QIE145T-W22	$1,062	I1	66	1.25	1.73	82.5	13.358	460	
		1200	143/5T	00112ST3HIE145T-W22	$1,062	I1	66	1.25	1.38	82.5	13.358	575	
		900	182/4T	00109ST3QIE182T-W22	$2,006	I1	97	1.25	2.30	78.5	15.860	460	
1.5	1.1	3600	143/5T	00156ST3QIE143T-W22	$981	I1	59	1.25	1.96	84.0	13.358	460	
		3600	143/5T	00156ST3HIE143T-W22	$981	I1	43	1.25	1.57	84.0	13.358	575	
		1800	143/5T	00158ST3QIE145T-W22	$981	I1	63	1.25	2.02	86.5	13.358	460	
		1800	143/5T	00158ST3HIE145T-W22	$981	I1	63	1.25	1.62	86.5	13.358	575	
		1200	182/4T	00152ST3QIE182T-W22	$1,286	I1	108	1.25	2.54	87.5	15.860	460	
		1200	182/4T	00152ST3HIE182T-W22	$1,286	I1	74	1.25	2.03	87.5	15.860	575	
		900	182/4T	00159ST3QIE184T-W22	$2,016	I1	112	1.25	2.70	82.5	15.860	460	
2	1.5	3600	143/5T	00236ST3QIE145T-W22	$1,023	I1	64	1.25	2.56	85.5	13.358	460	
		3600	143/5T	00236ST3HIE145T-W22	$1,023	I1	64	1.25	2.05	85.5	13.358	575	
		1800	143/5T	00218ST3QIE145T-W22	$1,023	I1	64	1.25	2.76	86.5	13.358	460	
		1800	143/5T	00218ST3HIE145T-W22	$1,023	I1	64	1.25	2.21	86.5	13.358	575	
		1200	182/4T	00212ST3QIE184T-W22	$1,363	I1	113	1.25	3.22	88.5	15.860	460	
		1200	182/4T	00212ST3HIE184T-W22	$1,363	I1	114	1.25	2.58	88.5	15.860	575	39
		900	213/5T	00209ST3QIE213T-W22	$2,701	I1	154	1.25	3.39	85.5	19.517	460	
3	2.2	3600	182/4T	00336ST3QIE182T-W22	$1,267	I1	109	1.25	3.63	86.5	15.860	460	
		3600	182/4T	00336ST3HIE182T-W22	$1,267	I1	108	1.25	2.90	86.5	15.860	575	
		1800	182/4T	00318ST3QIE182T-W22	$1,224	I1	106	1.25	3.91	89.5	15.860	460	
		1800	182/4T	00318ST3HIE182T-W22	$1,224	I1	104	1.25	3.13	89.5	15.860	575	
		1200	213/5T	00312ST3QIE213T-W22	$1,537	I1	173	1.25	4.41	89.5	19.517	460	
		1200	213/5T	00312ST3HIE213T-W22	$1,537	I1	173	1.25	3.53	89.5	19.517	575	
		900	213/5T	00309ST3QIE215T-W22	$2,883	I1	199	1.25	4.55	85.5	19.517	460	
5	3.7	3600	182/4T	00536ST3QIE184T-W22	$1,429	I1	116	1.25	5.90	88.5	15.860	460	
		3600	182/4T	00536ST3HIE184T-W22	$1,429	I1	116	1.25	4.72	88.5	15.860	575	
		1800	182/4T	00518ST3QIE184T-W22	$1,371	I1	115	1.25	6.45	89.5	15.860	460	
		1800	182/4T	00518ST3HIE184T-W22	$1,371	I1	115	1.25	5.16	89.5	15.860	575	
		1200	213/5T	00512ST3QIE215T-W22	$1,901	I1	191	1.25	6.83	89.5	19.517	460	
		1200	213/5T	00512ST3HIE215T-W22	$1,901	I1	191	1.25	5.46	89.5	19.517	575	
		900	254/6T	00509ST3QIE254T-W22	$4,243	I1	306	1.25	7.58	87.5	24.945	460	
7.5	5.5	3600	213/5T	00736ST3QIE213T-W22	$1,751	I1	174	1.25	8.76	89.5	19.517	460	
		3600	213/5T	00736ST3HIE213T-W22	$1,751	I1	173	1.25	7.01	89.5	19.517	575	
		1800	213/5T	00718ST3QIE213T-W22	$1,646	I1	185	1.25	9.18	91.7	19.517	460	
		1800	213/5T	00718ST3HIE213T-W22	$1,646	I1	185	1.25	7.34	91.7	19.517	575	
		1200	254/6T	00712ST3QIE254T-W22	$2,544	I1	322	1.25	9.48	91.0	24.945	460	
		1200	254/6T	00712ST3HIE254T-W22	$2,544	I1	299	1.25	7.58	91.0	24.945	575	
		900	254/6T	00709ST3QIE256T-W22	$5,040	I1	321	1.25	11.1	87.5	24.945	460	

continued on next page

Please refer to inside back cover for description of "NOTES"

For detailed specifications, data sheets, drawings and performance curves visit http:// www.weg.net

Data subject to change without notice.

TEFC - Foot Mount - *continued*

HP	kW	RPM	Frame	Catalog Number	List Price	Mult. Symbol	Approx. Shipping Weight (lbs)	Service Factor	FL Amps @ High	FL. Eff (%)	"C" Dimension (in)	Voltage (V)	Notes
10	7.5	3600	213/5T	01036ST3QIE215T-W22	$1,920	I1	191	1.25	11.6	90.2	19.517	460	
		3600	213/5T	01036ST3HIE215T-W22	$1,920	I1	191	1.25	9.28	90.2	19.517	575	
		1800	213/5T	01018ST3QIE215T-W22	$1,760	I1	188	1.25	12.4	91.7	19.517	460	
		1800	213/5T	01018ST3HIE215T-W22	$1,760	I1	199	1.25	9.92	91.7	19.517	575	
		1200	254/6T	01012ST3QIE256T-W22	$2,834	I1	329	1.25	12.9	91.0	24.945	460	
		1200	254/6T	01012ST3HIE256T-W22	$2,834	I1	329	1.25	10.3	91.0	24.945	575	
		900	284/6T	01009ST3QIE284T-W22	$5,936	I1	380	1.25	13.4	90.2	27.929	460	
15	11	3600	254/6T	01536ST3QIE254T-W22	$2,428	I1	303	1.25	17.2	91.0	24.945	460	
		3600	254/6T	01536ST3HIE254T-W22	$2,428	I1	303	1.25	13.8	91.0	24.945	575	
		1800	254/6T	01518ST3QIE254T-W22	$2,257	I1	341	1.25	18.0	92.4	24.945	460	
		1800	254/6T	01518ST3HIE254T-W22	$2,257	I1	351	1.25	14.4	92.4	24.945	575	
		1200	284/6T	01512ST3QIE284T-W22	$4,203	I1	430	1.25	17.9	91.7	27.929	460	
		1200	284/6T	01512ST3HIE284T-W22	$4,203	I1	425	1.25	14.3	91.7	27.929	575	
		900	284/6T	01509ST3QIE286T-W22	$6,742	I1	437	1.25	19.4	90.2	27.929	460	
20	15	3600	254/6T	02036ST3QIE256T-W22	$2,957	I1	329	1.25	23.2	91.0	24.945	460	
		3600	254/6T	02036ST3HIE256T-W22	$2,957	I1	328	1.25	18.6	91.0	24.945	575	
		1800	254/6T	02018ST3QIE256T-W22	$2,597	I1	385	1.25	24.1	93.0	24.945	460	
		1800	254/6T	02018ST3HIE256T-W22	$2,597	I1	400	1.25	19.3	93.0	24.945	575	
		1200	284/6T	02012ST3QIE286T-W22	$4,773	I1	456	1.25	24.2	91.7	27.929	460	
		1200	284/6T	02012ST3HIE286T-W22	$4,773	I1	456	1.25	19.4	91.7	27.929	575	
		900	324/6T	02009ST3QIE324T-W22	$8,269	I1	551	1.25	28.3	91.0	31.116	460	
25	18.5	3600	284/6TS	02536ST3QIE284TS-W22	$3,368	I1	413	1.25	28.5	91.7	26.557	460	
		3600	284/6TS	02536ST3HIE284TS-W22	$3,368	I1	403	1.25	22.8	91.7	26.557	575	
		1800	284/6T	02518ST3QIE284T-W22	$2,926	I1	448	1.25	29.5	93.6	27.929	460	
		1800	284/6T	02518ST3HIE284T-W22	$2,926	I1	447	1.25	23.6	93.6	27.929	575	
		1200	324/6T	02512ST3QIE324T-W22	$5,211	I1	588	1.25	30.4	93.0	31.116	460	
		1200	324/6T	02512ST3HIE324T-W22	$5,211	I1	587	1.25	24.3	93.0	31.116	575	
		900	324/6T	02509ST3QIE326T-W22	$8,838	I1	596	1.25	35.9	91.0	31.116	460	
30	22	3600	284/6TS	03036ST3QIE286TS-W22	$3,799	I1	433	1.25	33.8	91.7	26.557	460	
		3600	284/6TS	03036ST3HIE286TS-W22	$3,799	I1	433	1.25	27.0	91.7	26.557	575	
		1800	284/6T	03018ST3QIE286T-W22	$3,509	I1	454	1.25	35.1	93.6	27.929	460	
		1800	284/6T	03018ST3HIE286T-W22	$3,509	I1	484	1.25	28.1	93.6	27.929	575	
		1200	324/6T	03012ST3QIE326T-W22	$5,359	I1	633	1.25	35.8	93.0	31.116	460	
		1200	324/6T	03012ST3HIE326T-W22	$5,359	I1	632	1.25	28.6	93.0	31.116	575	
		900	364/5T	03009ST3QIE364T-W22	$13,149	I1	900	1.25	37.0	92.4	34.251	460	
40	30	3600	324/6TS	04036ST3QIE324TS-W22	$5,306	I1	591	1.25	45.8	92.4	29.616	460	
		3600	324/6TS	04036ST3HIE324TS-W22	$5,306	I1	591	1.25	36.6	92.4	29.616	575	
		1800	324/6T	04018ST3QIE324T-W22	$4,692	I1	590	1.25	47.1	94.1	31.116	460	
		1800	324/6T	04018ST3HIE324T-W22	$4,692	I1	617	1.25	37.7	94.1	31.116	575	
		1200	364/5T	04012ST3QIE364T-W22	$8,636	I1	1007	1.25	46.5	94.1	34.251	460	
		1200	364/5T	04012ST3HIE364T-W22	$8,636	I1	1003	1.25	37.2	94.1	34.251	575	
		900	364/5T	04009ST3QIE365T-W22	$14,909	I1	955	1.25	50.3	92.4	34.251	460	

continued on next page

Please refer to inside back cover for description of "NOTES"

For detailed specifications, data sheets, drawings and performance curves visit http://www.weg.net

IEEE 841

TEFC - Foot Mount - *continued*

HP	kW	RPM	Frame	Catalog Number	List Price	Mult. Symbol	Approx. Shipping Weight (lbs)	Service Factor	FL Amps @ High	FL. Eff (%)	"C" Dimension (in)	Voltage (V)	Notes
50	37	3600	324/6TS	05036ST3QIE326TS-W22	$5,970	I1	613	1.25	56.1	93.0	29.616	460	
		3600	324/6TS	05036ST3HIE326TS-W22	$5,970	I1	612	1.25	44.9	93.0	29.616	575	
		1800	324/6T	05018ST3QIE326T-W22	$5,233	I1	610	1.25	59.2	94.5	31.116	460	
		1800	324/6T	05018ST3HIE326T-W22	$5,233	I1	636	1.25	47.4	94.5	31.116	575	
		1200	364/5T	05012ST3QIE365T-W22	$9,369	I1	1022	1.25	57.4	94.1	34.251	460	
		1200	364/5T	05012ST3HIE365T-W22	$9,369	I1	1019	1.25	45.9	94.1	34.251	575	
		900	404/5T	05009ST3QIE404T-W22	$19,331	I1	1214	1.25	60.0	93.0	39.730	460	
60	45	3600	364/5TS	06036ST3QIE364TS-W22	$8,665	I1	965	1.25	67.0	93.6	32.338	460	
		3600	364/5TS	06036ST3HIE364TS-W22	$8,665	I1	963	1.25	53.6	93.6	32.338	575	
		1800	364/5T	06018ST3QIE364T-W22	$8,044	I1	957	1.25	68.3	95.0	34.251	460	
		1800	364/5T	06018ST3HIE364T-W22	$8,044	I1	1030	1.25	54.6	95.0	34.251	575	
		1200	404/5T	06012ST3QIE404T-W22	$11,790	I1	1253	1.25	69.5	94.5	39.730	460	
		1200	404/5T	06012ST3HIE404T-W22	$11,790	I1	1249	1.25	55.6	94.5	39.730	575	
		900	404/5T	06009ST3QIE405T-W22	$22,579	I1	1261	1.25	73.0	93.0	39.730	460	
75	55	3600	364/5TS	07536ST3QIE365TS-W22	$10,210	I1	1012	1.25	81.9	93.6	32.338	460	
		3600	364/5TS	07536ST3HIE365TS-W22	$10,210	I1	972	1.25	65.5	93.6	32.338	575	
		1800	364/5T	07518ST3QIE365T-W22	$9,289	I1	996	1.25	84.1	95.4	34.251	460	
		1800	364/5T	07518ST3QIERB365T-W2	$10,019	I1	1019	1.25	84.1	95.4	34.251	460	14
		1800	364/5T	07518ST3HIE365T-W22	$9,289	I1	1045	1.25	67.3	95.4	34.251	575	
		1200	404/5T	07512ST3QIE405T-W22	$12,866	I1	1317	1.25	84.9	94.5	39.730	460	
		1200	404/5T	07512ST3QIERB405T-W2	$12,866	I1	1326	1.25	84.9	94.5	39.730	460	14
		1200	404/5T	07512ST3HIE405T-W22	$12,866	I1	1298	1.25	67.9	94.5	39.730	575	
		900	444/5T	07509ST3QIE444T-W22	$23,457	I1	1666	1.25	93.0	93.6	44.950	460	
100	75	3600	404/5TS	10036ST3QIE405TS-W22	$12,806	I1	1182	1.25	110	94.1	36.732	460	
		3600	404/5TS	10036ST3HIE405TS-W22	$12,806	I1	1191	1.25	88.0	94.1	36.732	575	
		1800	404/5T	10018ST3QIE405T-W22	$12,471	I1	1276	1.25	116	95.4	39.730	460	
		1800	404/5T	10018ST3QIERB405T-W2	$12,471	I1	1292	1.25	116	95.4	39.730	460	14
		1800	404/5T	10018ST3HIE405T-W22	$12,471	I1	1339	1.25	92.8	95.4	39.730	575	
		1800	404/5T	10018ST3HIERB405T-W2	$12,471	I1	1348	1.25	92.8	95.4	39.730	575	14
		1200	444/5T	10012ST3QIE444T-W22	$17,933	I1	1800	1.25	121	95.0	44.950	460	
		1200	444/5T	10012ST3QIERB444T-W2	$17,933	I1	1915	1.25	121	95.0	44.950	460	14
		1200	444/5T	10012ST3HIE444T-W22	$17,933	I1	1900	1.25	96.8	95.0	44.950	575	
		900	444/5T	10009ST3QIE445T-W22	$24,681	I1	1944	1.25	127	94.1	44.950	460	
		900	444/5T	10009ST3QIERB445T-W2	$24,681	I1	1763	1.25	127	94.1	44.950	460	14
125	90	3600	444/5TS	12536ST3QIE444TS-W22	$18,198	I1	1805	1.15	134	95.0	41.200	460	
		3600	444/5TS	12536ST3HIE444TS-W22	$18,198	I1	1796	1.15	107	95.0	41.200	575	
		1800	444/5T	12518ST3QIE444T-W22	$16,564	I1	1708	1.15	139	95.4	44.950	460	
		1800	444/5T	12518ST3QIERB444T-W2	$16,564	I1	1836	1.15	139	95.4	44.950	460	14
		1800	444/5T	12518ST3HIE444T-W22	$16,564	I1	1822	1.15	111	95.4	44.950	575	
		1200	444/5T	12512ST3QIE445T-W22	$20,158	I1	2016	1.15	143	95.0	44.950	460	
		1200	444/5T	12512ST3QIERB445T-W2	$20,158	I1	2028	1.15	143	95.0	44.950	460	14
		1200	444/5T	12512ST3HIE445T-W22	$20,158	I1	2013	1.15	114	95.0	44.950	575	
		900	445/7T	12509ST3QIE447T-W22	$29,733	I1	2239	1.15	151	94.5	48.701	460	
		900	445/7T	12509ST3QIERB447T-W2	$29,733	I1	2273	1.15	151	94.5	48.701	460	14

continued on next page

Please refer to inside back cover for description of "NOTES"

For detailed specifications, data sheets, drawings and performance curves visit http:// www.weg.net

Data subject to change without notice.

TEFC - Foot Mount - *continued*

HP	kW	RPM	Frame	Catalog Number	List Price	Mult. Symbol	Approx. Shipping Weight (lbs)	Service Factor	FL Amps @ High	FL. Eff (%)	"C" Dimension (in)	Voltage (V)	Notes
150	110	3600	444/5TS	15036ST3QIE445TS-W22	$21,433	I1	1900	1.15	161	95.0	41.200	460	
		3600	444/5TS	15036ST3HIE445TS-W22	$21,433	I1	1908	1.15	129	95.0	41.200	575	
		1800	444/5T	15018ST3QIE445T-W22	$18,587	I1	1910	1.15	170	95.8	44.950	460	
		1800	444/5T	15018ST3QIERB445T-W2	$18,587	I1	2041	1.15	170	95.8	44.950	460	14
		1800	444/5T	15018ST3HIE445T-W22	$18,587	I1	2027	1.15	136	95.8	44.950	575	
		1800	444/5T	15018ST3HIERB445T-W2	$18,587	I1	2038	1.15	136	95.8	44.950	575	14
		1200	445/7T	15012ST3QIE447T-W22	$23,181	I1	2511	1.15	176	95.8	48.701	460	
		1200	445/7T	15012ST3QIERB447T-W2	$23,181	I1	2543	1.15	176	95.8	48.701	460	14
		1200	445/7T	15012ST3HIE447T-W22	$23,181	I1	2531	1.15	141	95.8	48.701	575	
		900	445/7T	15009ST3QIE447T-W22	$34,755	I1	2409	1.15	185	94.5	48.701	460	
		900	445/7T	15009ST3QIERB447T-W2	$34,755	I1	2421	1.15	185	94.5	48.701	460	14;51
200	150	3600	445/7TS	20036ST3QIE447TS-W22	$28,568	I1	2240	1.15	219	95.4	44.951	460	
		3600	445/7TS	20036ST3HIE447TS-W22	$28,568	I1	2209	1.15	175	95.4	44.951	575	
		1800	445/7T	20018ST3QIE447T-W22	$23,696	I1	2320	1.15	230	96.2	48.701	460	
		1800	445/7T	20018ST3QIERB447T-W2	$23,696	I1	2520	1.15	230	96.2	48.701	460	14
		1800	445/7T	20018ST3HIE447T-W22	$23,696	I1	2502	1.15	184	96.2	48.701	575	
		1200	447/9T	20012ST3QIE449T-W22	$27,557	I1	2978	1.15	237	95.8	56.338	460	
		1200	447/9T	20012ST3QIERB449T-W2	$27,557	I1	3052	1.15	237	95.8	56.338	460	14
		1200	447/9T	20012ST3HIE449T-W22	$27,557	I1	3030	1.15	190	95.8	56.338	575	
		1200	447/9T	20012ST3HIERB449T-W2	$27,557	I1	3046	1.15	190	95.8	56.338	575	14
		900	L447/9T	20009ST3QIE449T-W22	$57,394	I1	3655	1.15	242	95.0	57.181	460	43
		900	L447/9T	20009ST3QIERB449T-W2	$57,394	I1	3669	1.15	242	95.0	57.181	460	14;43
		900	L447/9T	20009ST3HIE449T-W22	$57,394	I1	3569	1.15	194	95.0	57.181	575	43
250	185	3600	447/9TS	25036ST3QIE449TS-W22	$34,663	I1	2603	1.15	266	95.8	52.940	460	
		1800	447/9T	25018ST3QIE449T-W22	$30,081	I1	2904	1.15	281	96.2	56.338	460	
		1800	447/9T	25018ST3QIERB449T-W2	$30,081	I1	2869	1.15	281	96.2	56.338	460	14
		1200	447/9T	25012ST3QIE449T-W22	$39,415	I1	3190	1.15	292	95.8	56.338	460	
		1200	447/9T	25012ST3QIERB449T-W2	$39,415	I1	2702	1.15	292	95.8	56.338	460	14
300	220	1800	447/9T	30018ST3QIE449T-W22	$36,810	I1	3102	1.15	330	96.2	56.338	460	
		1800	447/9T	30018ST3QIERB449T-W2	$36,810	I1	3130	1.15	330	96.2	56.338	460	14
		1200	L447/9T	30012ST3QIE449T-W22	$44,648	I1	3645	1.15	351	95.8	57.181	460	43
		1200	L447/9T	30012ST3QIERB449T-W2	$44,648	I1	3571	1.15	351	95.8	57.181	460	14;43;51
350	260	1800	L447/9T	35018ST3QIE449T-W22	$44,105	I1	3580	1.15	394	96.2	57.181	460	43
		1800	L447/9T	35018ST3QIERB449T-W2	$44,105	I1	3580	1.15	394	96.2	57.181	460	14;43
		1200	L447/9T	35012ST3QIERB449T-W2	$52,634	I1	3756	1.15	415	95.8	57.181	460	14;43
400	300	1800	L447/9T	40018ST3QIE449T-W22	$48,396	I1	3467	1.15	455	96.2	57.181	460	43
		1800	L447/9T	40018ST3QIERB449T-W2	$48,396	I1	3467	1.15	455	96.2	57.181	460	14;43

Please refer to inside back cover for description of "NOTES"

For detailed specifications, data sheets, drawings and performance curves visit http://www.weg.net

Severe Duty - Three-Phase Motors

IEEE 841

TEFC - C-Face - Foot Mount

HP	kW	RPM	Frame	Catalog Number	List Price	Mult. Symbol	Approx. Shipping Weight (lbs)	Service Factor	FL Amps @ High	FL. Eff (%)	"C" Dimension (in)	Voltage (V)	Notes
1	0.75	1800	143/5TC	00118ST3QIE143TC-W22	$972	I1	55	1.25	1.47	85.5	13.358	460	
		1200	143/5TC	00112ST3QIE145TC-W22	$1,112	I1	63	1.25	1.73	82.5	13.358	460	
1.5	1.1	3600	143/5TC	00156ST3QIE143TC-W22	$1,031	I1	57	1.25	1.96	84.0	13.358	460	
		1800	143/5TC	00158ST3QIE145TC-W22	$1,031	I1	61	1.25	2.02	86.5	13.358	460	
		1200	182/4TC	00152ST3QIE182TC-W22	$1,351	I1	112	1.25	2.54	87.5	15.860	460	
		900	182/4TC	00159ST3QIE184TC-W22	$2,081	I1	116	1.25	2.70	82.5	15.860	460	
2	1.5	3600	143/5TC	00236ST3QIE145TC-W22	$1,073	I1	62	1.25	2.56	85.5	13.358	460	
		1800	143/5TC	00218ST3QIE145TC-W22	$1,073	I1	62	1.25	2.76	86.5	13.358	460	
		1200	182/4TC	00212ST3QIE184TC-W22	$1,428	I1	117	1.25	3.22	88.5	15.860	460	39
		900	213/5TC	00209ST3QIE213TC-W22	$2,781	I1	185	1.25	3.39	85.5	19.517	460	
3	2.2	3600	182/4TC	00336ST3QIE182TC-W22	$1,332	I1	113	1.25	3.63	86.5	15.860	460	
		1800	182/4TC	00318ST3QIE182TC-W22	$1,289	I1	109	1.25	3.91	89.5	15.860	460	
		1200	213/5TC	00312ST3QIE213TC-W22	$1,617	I1	178	1.25	4.41	89.5	19.517	460	
		900	213/5TC	00309ST3QIE215TC-W22	$2,963	I1	181	1.25	4.55	85.5	19.517	460	
5	3.7	3600	182/4TC	00536ST3QIE184TC-W22	$1,494	I1	120	1.25	5.90	88.5	15.860	460	
		1800	182/4TC	00518ST3QIE184TC-W22	$1,436	I1	119	1.25	6.45	89.5	15.860	460	
		1200	213/5TC	00512ST3QIE215TC-W22	$1,981	I1	194	1.25	6.83	89.5	19.517	460	
		900	254/6TC	00509ST3QIE254TC-W22	$4,363	I1	309	1.25	7.58	87.5	24.945	460	
7.5	5.5	3600	213/5TC	00736ST3QIE213TC-W22	$1,831	I1	177	1.25	8.76	89.5	19.517	460	
		1800	213/5TC	00718ST3QIE213TC-W22	$1,726	I1	189	1.25	9.18	91.7	19.517	460	
		1200	254/6TC	00712ST3QIE254TC-W22	$2,664	I1	325	1.25	9.48	91.0	24.945	460	
		900	254/6TC	00709ST3QIE256TC-W22	$5,160	I1	321	1.25	11.1	87.5	24.945	460	
10	7.5	3600	213/5TC	01036ST3QIE215TC-W22	$2,000	I1	195	1.25	11.6	90.2	19.517	460	
		1800	213/5TC	01018ST3QIE215TC-W22	$1,840	I1	203	1.25	12.4	91.7	19.517	460	
		1200	254/6TC	01012ST3QIE256TC-W22	$2,954	I1	340	1.25	12.9	91.0	24.945	460	
		900	284/6TC	01009ST3QIE284TC-W22	$6,136	I1	400	1.25	13.4	90.2	27.929	460	
15	11	3600	254/6TC	01536ST3QIE254TC-W22	$2,548	I1	306	1.25	17.2	91.0	24.945	460	
		1800	254/6TC	01518ST3QIE254TC-W22	$2,377	I1	355	1.25	18.0	92.4	24.945	460	
		1200	284/6TC	01512ST3QIE284TC-W22	$4,403	I1	434	1.25	17.9	91.7	27.929	460	
		900	284/6TC	01509ST3QIE286TC-W22	$6,942	I1	444	1.25	19.4	90.2	27.929	460	
20	15	3600	254/6TC	02036ST3QIE256TC-W22	$3,077	I1	332	1.25	23.2	91.0	24.945	460	
		1800	254/6TC	02018ST3QIE256TC-W22	$2,717	I1	404	1.25	24.1	93.0	24.945	460	
		1200	284/6TC	02012ST3QIE286TC-W22	$4,973	I1	465	1.25	24.2	91.7	27.929	460	
		900	324/6TC	02009ST3QIE324TC-W22	$8,494	I1	482	1.25	28.3	91.0	31.116	460	
25	18.5	3600	284/6TSC	02536ST3QIE284TSC-W2	$3,568	I1	389	1.25	28.5	91.7	26.557	460	
		1800	284/6TC	02518ST3QIE284TC-W22	$3,126	I1	456	1.25	29.5	93.6	27.929	460	
		1200	324/6TC	02512ST3QIE324TC-W22	$5,436	I1	603	1.25	30.4	93.0	31.116	460	
		900	324/6TC	02509ST3QIE326TC-W22	$9,063	I1	539	1.25	35.9	91.0	31.116	460	
30	22	3600	284/6TSC	03036ST3QIE286TSC-W2	$3,999	I1	441	1.25	33.8	91.7	26.557	460	
		1800	284/6TC	03018ST3QIE286TC-W22	$3,709	I1	493	1.25	35.1	93.6	27.929	460	
		1200	324/6TC	03012ST3QIE326TC-W22	$5,584	I1	646	1.25	35.8	93.0	31.116	460	
		900	364/5TC	03009ST3QIE364TC-W22	$13,524	I1	917	1.25	37.0	92.4	34.251	460	

continued on next page

Please refer to inside back cover for description of "NOTES"

For detailed specifications, data sheets, drawings and performance curves visit http:// www.weg.net

Data subject to change without notice.

TEFC - C-Face - Foot Mount - *continued*

HP	kW	RPM	Frame	Catalog Number	List Price	Mult. Symbol	Approx. Shipping Weight (lbs)	Service Factor	FL Amps @ High	FL. Eff (%)	"C" Dimension (in)	Voltage (V)	Notes
40	30	3600	324/6TSC	04036ST3QIE324TSC-W2	$5,531	I1	602	1.25	45.8	92.4	29.616	460	
		1800	324/6TC	04018ST3QIE324TC-W22	$4,917	I1	633	1.25	47.1	94.1	31.116	460	
		1200	364/5TC	04012ST3QIE364TC-W22	$9,011	I1	1032	1.25	46.5	94.1	34.251	460	
		900	364/5TC	04009ST3QIE365TC-W22	$15,284	I1	990	1.25	50.3	92.4	34.251	460	
50	37	3600	324/6TSC	05036ST3QIE326TSC-W2	$6,195	I1	627	1.25	56.1	93.0	29.616	460	
		1800	324/6TC	05018ST3QIE326TC-W22	$5,458	I1	651	1.25	59.2	94.5	31.116	460	
		1200	364/5TC	05012ST3QIE365TC-W22	$9,744	I1	983	1.25	57.4	94.1	34.251	460	
		900	404/5TC	05009ST3QIE404TC-W22	$19,856	I1	1132	1.25	60.0	93.0	39.730	460	
60	45	1200	404/5TC	06012ST3QIE404TC-W22	$12,315	I1	1156	1.25	69.5	94.5	39.730	460	

TEFC - C-Face - Footless

HP	kW	RPM	Frame	Catalog Number	List Price	Mult. Symbol	Approx. Shipping Weight (lbs)	Service Factor	FL Amps @ High	FL. Eff (%)	"C" Dimension (in)	Voltage (V)	Notes
1	0.75	1800	143/5TC	00118ST3QIER143TC-W2	$1,000	I1	54	1.25	1.47	85.5	14.066	460	15
1.5	1.1	1800	143/5TC	00158ST3QIER145TC-W2	$1,061	I1	62	1.25	2.02	86.5	14.066	460	15
2	1.5	1800	143/5TC	00218ST3QIER145TC-W2	$1,104	I1	63	1.25	2.76	86.5	14.066	460	15
3	2.2	1800	182/4TC	00318ST3QIER182TC-W2	$1,326	I1	110	1.25	3.91	89.5	17.080	460	15;39
5	3.7	1800	182/4TC	00518ST3QIER184TC-W2	$1,478	I1	119	1.25	6.45	89.5	17.080	460	15
7.5	5.5	1800	213/5TC	00718ST3QIER213TC-W2	$1,776	I1	177	1.25	9.18	91.7	21.269	460	15
10	7.5	1800	213/5TC	01018ST3QIER215TC-W2	$1,893	I1	192	1.25	12.4	91.7	21.269	460	15

Please refer to inside back cover for description of "NOTES"

For detailed specifications, data sheets, drawings and performance curves visit http://www.weg.net

W22 API661 Severe Duty Motors

5-75HP

The WEG W22 API661 product is the latest generation of Severe Duty Cast Iron frame industrial motors designed to meet the demands of Reliability, Efficiency, and Total Cost of Ownership todays' customers demand, and have come to expect from WEG.

API 661

Standard Features:

- Heavy Duty FC200 Cast Iron Frame, Brackets, Conduit Box and Fan Cover
- Motor rated IP56 for better driven water exclusion
- InproSeal® seals rated IP56 on both bearings+DE umbrella Slinger
- Shaft Drilled & Tapped for vertical lifting shaft up or down
- Roller bearing on DE for min 40,000 L-10 bearing life on belted loads (213T and larger)
- Dual drilled mounting Feet for increased flexibility
- Foot flatness of <.005" and paint free feet aid mounting and alignment
- Regreasable bearings with WEG Positive Pressure Lubrication System (PPLS) including Cast Iron bearing caps, Seamless Stainless Steel grease inlet extensions, and Auto grease relief
- Forged shouldered eyebolts for safe handling (180T frame and above)
- Stainless Steel automatic condensate Drains in both endshields
- 4-Bolts Conduit Box and Cover with Neoprene gaskets for sure seal
- VFD Rated Class F insulation system per NEMA MG1 Part 31 utilizing Class H Varnish and Magnet wire
- Stainless Steel Nameplate includes Weight, Division 2, and lubrication information
- IEEE 841 Test report with Vibration data included via QR Code and WEG Data Viewer APP

Features that make a difference:

- Low Vibration design .04 in/sec (1/2 IEEE 841 Spec)
- Vertical lifting cabability
- Automatic Drains at lowest point
- Bearings meet IP56
- Epoxy Paint system exceeds 250Hrs Salt spray per ASTMB117 (C4 per ISO12944)
- Meets IEEE standard 841

TEFC - Foot Mount

HP	kW	RPM	Frame	Catalog Number	List Price	Mult. Symbol	Approx. Shipping Weight (lbs)	Service Factor	FL Amps @ High	FL. Eff (%)	"C" Dimension (in)	Voltage (V)	Notes
5	3.7	1800	182/4T	00518ST3QAP184T-W22	$1,371	I1	115	1.15	6.5	89.5	15.86	460	
7.5	5.5	1800	213/5T	00718ST3QAP213T-W22	$1,870	I1	185	1.15	9.2	91.7	19.517	460	
		1200	254/6T	00712ST3QAP254T-W22	$2,831	I1	341	1.15	9.6	91	24.945	460	14
		900	254/6T	00709ST3QAP256T-W22	$5,240	I1	320	1.15	11.3	87.5	24.945	460	14
10	7.5	1800	213/5T	01018ST3QAP215T-W22	$1,962	I1	188	1.15	12.4	91.7	19.517	460	14
		1200	254/6T	01012ST3QAP256T-W22	$2,979	I1	385	1.15	12.9	91	24.945	460	14
		900	284/6T	01009ST3QAP284T-W22	$6,350	I1	390	1.15	14.0	89.5	27.929	460	14
15	11	1800	254/6T	01518ST3QAP254T-W22	$2,524	I1	341	1.15	18.0	92.4	24.945	460	14
		1200	284/6T	01512ST3QAP284T-W22	$4,591	I1	397	1.15	17.9	91.7	27.929	460	14
		900	284/6T	01509ST3QAP286T-W22	$7,156	I1	420	1.15	20.0	89.5	27.929	460	14
20	15	1800	254/6T	02018ST3QAP256T-W22	$2,881	I1	385	1.15	24.1	93	24.945	460	14
		1200	284/6T	02012ST3QAP286T-W22	$5,155	I1	445	1.15	24.2	91.7	27.929	460	14
		900	324/6T	02009ST3QAP324T-W22	$8,619	I1	540	1.15	29.8	90.2	31.116	460	14
25	18.5	1800	284/6T	02518ST3QAP284T-W22	$3,236	I1	448	1.15	29.5	93.6	27.929	460	14
		1200	324/6T	02512ST3QAP324T-W22	$5,619	I1	557	1.15	30.5	93	31.116	460	14
		900	324/6T	02509ST3QAP326T-W22	$9,188	I1	600	1.15	35.9	91	31.116	460	14
30	22	1800	284/6T	03018ST3QAP286T-W22	$3,824	I1	454	1.15	35.1	93.6	27.929	460	14
		1200	324/6T	03012ST3QAP326T-W22	$5,738	I1	603	1.15	36.2	93	31.116	460	14
		900	364/5T	03009ST3QAP364T-W22	$13,450	I1	825	1.15	38.1	91.7	34.251	460	14
40	30	1800	324/6T	04018ST3QAP324T-W22	$5,095	I1	590	1.15	47.1	94.1	31.116	460	14
		1200	364/5T	04012ST3QAP364T-W22	$9,164	I1	867	1.15	46.5	94.1	34.251	460	14
		900	364/5T	04009ST3QAP365T-W22	$15,250	I1	888	1.15	50.9	92.4	34.251	460	14
50	37	1800	324/6T	05018ST3QAP326T-W22	$5,617	I1	610	1.15	59.2	94.5	31.116	460	14
		1200	364/5T	05012ST3QAP365T-W22	$9,909	I1	898	1.15	57.4	94.1	34.251	460	14
		900	404/5T	05009ST3QAP405T-W22	$19,500	I1	1200	1.15	60.2	93	37.726	460	14
60	45	1800	364/5T	06018ST3QAP364T-W22	$8,535	I1	957	1.15	71.6	95	34.251	460	14
75	55	1800	364/5T	07518ST3QAP365T-W22	$9,772	I1	996	1.15	87.2	95.4	34.251	460	14

Please refer to inside back cover for description of "NOTES"

For detailed specifications, data sheets, drawings and performance curves visit http:// www.weg.net

Severe Duty – Three-Phase Motors

CRUSHER DUTY

TEFC - NEMA Premium®

Designed for the most demanding crusher applications. These motors are designed for horizontal and vertical mounting and have exceptional high starting and breakdown torques.

WEG's W22 cast iron platform has a superior cooling system and solid feet for cool operation and low vibration and noise, extending the life of the motor.

Standard Features:

- 50/60 Hz rated (380V on Nameplate - 400/415 available)
- Rated 50Hz at same Horsepower up to 250HP 1.0 Service Factor for 2, 4 & 6 Pole motors
- Class F insulation (Impregnation Resin and Magnet wire are class H)
- NEMA design A. All ratings exceed NEMA design C torque
- F1 Mounted (F2 convertible). Frames 447T and up can easily be F2 converted by simply rotating the terminal box adapter
- Stainless Steel Nameplate - Laser etched with high contrast background
- Gasketed conduit box
- Regreasable bearings
- Largest diameter shafts ("Z" frames) for the highest load ratings in the industry
- Labyrinth seal on both ends - 580Z and 586/7T
- Class I, Div. 2, Groups A, B, C & D – T3, Class II, Div 2, Groups F & G – T3C

Features that make a difference:

- Special Lead Protection
- Oversized Roller bearings
- Versatile starting methods - capable of wye/delta, across the line start (12 leads)
- NPT Threaded terminal box

***Inverter Rated: Meets MG 1 Part 31**
1000:1 for variable torque
6:1 for constant torque

** Insulated housing standard on L447/9T and above*

TEFC - Foot Mount

HP	kW	RPM	Frame	Catalog Number	List Price	Mult. Symbol	Approx. Shipping Weight (lbs)	Service Factor	FL Amps @ High	FL. Eff (%)	"C" Dimension (in)	Voltage (V)	Notes
50	37	900	404/5T	05009ET3EKD404T-W22	$17,648	K1	1483	1.25	60.0	93.0	39.730	230/460	14
60	45	1200	404/5T	06012ET3ERB404T-W22	$10,497	N1	1262	1.25	69.5	94.5	39.730	230/460	14
75	55	1200	404/5T	07512ET3ERB405T-W22	$12,058	N1	1262	1.25	84.9	94.5	39.730	230/460	14
		1200	404/5T	07512ET3GRB405T-W22	$12,058	N1	1309	1.25	84.9	94.5	39.730	460	14
		900	444/5T	07509ET3GKD444T-W22	$23,334	K1	2143	1.25	93.0	93.6	45.157	460	14
		900	444/5T	07509ET3QRB444TF2-W2	$23,334	N1	1707	1.25	93.0	93.6	45.157	460	14;51
100	75	1800	404/5T	10018ET3ERB405T-W22	$11,689	N1	1239	1.25	111	95.4	39.730	230/460	14
		1800	404/5T	10018ET3GRB405T-W22	$11,689	N1	1199	1.25	111	95.4	39.730	460	14
		1800	404/5T	10018ET3HRB405T-W22	$11,689	N1	1294	1.25	88.8	95.4	39.730	575	14
		1200	444/5T	10012ET3ERB444T-W22	$15,631	N1	1859	1.25	121	95.0	45.157	230/460	14
		1200	444/5T	10012ET3GRB444T-W22	$15,631	N1	1854	1.25	121	95.0	45.157	460	14
		900	444/5T	10009ET3GKD445T-W22	$26,988	K1	1952	1.25	127	94.1	45.157	460	14
125	90	1800	444/5T	12518ET3ERB444T-W22	$14,748	N1	1730	1.15	139	95.4	45.157	230/460	14
		1800	444/5T	12518ET3GRB444T-W22	$14,748	N1	1736	1.15	139	95.4	45.157	460	14
		1200	444/5T	12512ET3ERB445T-W22	$17,947	N1	1993	1.15	143	95.0	45.157	230/460	14
		1200	444/5T	12512ET3GRB445T-W22	$17,947	N1	1996	1.15	143	95.0	45.157	460	14
		900	445/7T	12509ET3GKD447T-W22	$28,175	K1	2287	1.15	151	94.5	48.701	460	14
150	110	1800	444/5T	15018ET3GRB445T-W22	$17,420	N1	1853	1.15	170	95.8	45.157	460	14
		1800	444/5T	15018ET3HRB445T-W22	$17,420	N1	2034	1.15	136	95.8	45.157	575	14
		1200	445/7T	15012ET3GRB447T-W22	$20,639	N1	2371	1.15	176	95.8	48.701	460	14
		900	445/7T	15009ET3GKD447T-W22	$30,677	K1	2457	1.15	185	94.5	48.701	460	14;19
200	150	1800	445/7T	20018ET3GRB447T-W22	$21,098	N1	2209	1.15	230	96.2	48.701	460	14
		1800	445/7T	20018ET3HRB447T-W22	$21,098	N1	1850	1.15	184	96.2	48.701	575	14
		1200	445/7T	20012ET3GRB447T-W22	$25,133	N1	2588	1.15	237	95.8	48.701	460	14
		1200	447/9T	20012ET3GRB449T-W22	$25,255	N1	2940	1.15	237	95.8	56.338	460	14
		1200	504/5Z	20012ET3GKD505Z-W22	$25,133	K1	2841	1.15	244	95.4	55.090	460	14;18;43
		1200	504/5Z	20012ET3HKD505Z-W22	$25,133	K1	2861	1.15	197	95.8	55.090	575	14;18;43
		900	447/9T	20009ET3GKD449T-W22	$49,899	K1	3268	1.15	254	95.0	56.338	460	14
250	185	1800	445/7T	25018ET3GKD447T-W22	$26,716	K1	2993	1.15	281	96.2	48.701	460	14
		1800	445/7T	25018ET3GRB447T-W22	$26,716	N1	2554	1.15	281	96.2	48.701	460	14
		1800	445/7T	25018ET3HRB447T-W22	$26,716	N1	2414	1.15	225	96.2	48.701	575	14;51
		1800	447/9T	25018ET3GRB449T-W22	$26,803	N1	2815	1.15	281	96.2	56.338	460	14
		1800	504/5Z	25018ET3GKD505Z-W22	$26,716	K1	2818	1.15	277	96.2	55.090	460	14;18;43
		1200	447/9T	25012ET3GKD449T-W22	$35,555	K1	3224	1.15	292	95.8	56.338	460	14
		1200	447/9T	25012ET3GRB449T-W22	$35,555	N1	3224	1.15	292	95.8	56.338	460	14
		1200	586/7Z	25012ET3GKD580Z-W22	$39,631	K1	3817	1.15	299	95.8	61.902	460	14;18;43
		1200	586/7Z	25012ET3HKD580Z-W22	$39,631	K1	4636	1.15	239	95.8	61.902	575	14;18;43;51
		900	586/7T	25009ET3GKD586/7-W22	$56,168	K1	5128	1.15	299	95.8	61.902	460	14;43

continued on next page

Please refer to inside back cover for description of "NOTES"

For detailed specifications, data sheets, drawings and performance curves visit http://www.weg.net

CRUSHER DUTY

TEFC - Foot Mount - *continued*

HP	kW	RPM	Frame	Catalog Number	List Price	Mult. Symbol	Approx. Shipping Weight (lbs)	Service Factor	FL Amps @ High	FL. Eff (%)	"C" Dimension (in)	Voltage (V)	Notes
300	220	1800	447/9T	30018ET3GKD449T-W22	$31,384	K1	3030	1.15	330	96.2	56.338	460	14
		1800	447/9T	30018ET3GRB449T-W22	$31,384	N1	2992	1.15	330	96.2	56.338	460	14
		1800	586/7Z	30018ET3GKD580Z-W22	$39,112	K1	3552	1.15	351	95.8	61.902	460	14;18;43
		1800	586/7Z	30018ET3HKD580Z-W22	$39,112	K1	4326	1.15	281	95.8	61.902	575	14;18;43
		1200	447/9T	30012ET3GKD449T-W22	$38,437	K1	3313	1.00	356	95.8	56.338	460	14
		1200	586/7T	30012ET3GKD586/7-W22	$44,301	K1	4081	1.15	356	95.8	61.902	460	14;43
		1200	586/7Z	30012ET3GKD580Z-W22	$44,301	K1	4109	1.15	356	95.8	61.902	460	14;18;43
		1200	586/7Z	30012ET3HKD580Z-W22	$44,301	K1	4936	1.15	307	95.8	61.902	575	14;18;43
		900	586/7T	30009ET3GKD586/7-W22	$58,655	K1	5696	1.15	356	95.8	61.902	460	14;43
350	260	1800	447/9T	35018ET3GKD449T-W22	$36,517	K1	3258	1.15	394	96.2	56.338	460	14
		1800	447/9T	35018ET3GRB449T-W22	$36,517	N1	2941	1.15	394	96.2	56.338	460	14
		1800	586/7Z	35018ET3GKD580Z-W22	$41,230	K1	3577	1.15	415	95.8	61.902	460	14;18;43
		1800	586/7Z	35018ET3HKD580Z-W22	$41,230	K1	4572	1.15	327	96.2	61.902	575	14;18;43
		1200	L447/9T	35012ET3GRB449T-W22	$47,633	N1	3800	1.15	415	95.8	57.181	460	14;19;37;43
		1200	586/7Z	35012ET3GKD580Z-W22	$50,250	K1	4401	1.15	421	95.8	61.902	460	14;18;43
		1200	586/7T	35012ET3GKD586/7-W22	$50,250	K1	4373	1.15	421	95.8	61.902	460	14;43
		900	586/7T	35009ET3GKD586/7-W22	$64,873	K1	4797	1.00	426	95.8	61.902	460	1;14;43
400	300	1800	L447/9T	40018ET3GRB449T-W22	$43,805	N1	3404	1.15	445	96.2	57.181	460	14;43
		1800	586/7Z	40018ET3GKD580Z-W22	$45,805	K1	4052	1.15	466	96.2	61.902	460	14;18;43
		1800	586/7Z	40018ET3HKD580Z-W22	$45,805	K1	3692	1.15	364	96.2	61.902	575	14;18;43
		1200	L447/9T	40012ET3GRB449T-W22	$52,307	N1	3827	1.00	477	95.8	57.181	460	14;19;37;43
		1200	586/7T	40012ET3GKD586/7-W22	$56,201	K1	4699	1.15	483	96.2	61.902	460	14;43
		1200	586/7Z	40012ET3GKD580Z-W22	$58,210	K1	4572	1.15	483	96.2	61.902	460	14;18;43
		1200	586/7Z	40012ET3HKD580Z-W22	$58,210	K1	5513	1.15	386	96.2	61.902	575	14;18;43
450	330	1800	L447/9T	45018ET3GRB449T-W22	$48,010	N1	3657	1.15	501	96.2	57.181	460	14;43
		1800	586/7Z	45018ET3GKD580Z-W22	$48,053	K1	4277	1.15	527	95.8	61.902	460	14;18;43
		1800	586/7T	45018ET3GKD586/7-W22	$48,053	K1	5416	1.15	501	96.2	61.902	460	14;43
		1200	586/7Z	45012ET3GKD580Z-W22	$63,251	K1	5724	1.00	532	96.2	61.902	460	14;18;43
		1200	586/7	45012ET3GRB586/7-W22	$62,251	N1	5248	1.00	532	96.2	61.902	460	14;43
500	370	1800	L447/9T	50018ET3GRB449T-W22	$50,594	N1	5424	1.00	561	96.2	57.181	460	1;14;19;43
		1800	586/7Z	50018ET3GKD580Z-W22	$51,611	K1	4547	1.00	575	96.2	61.902	460	1;14;18;43
		1200	586/7Z	50012ET3GKD580Z-W22	$65,962	K1	5024	1.00	603	96.2	61.902	460	1;14;18;43

Please refer to inside back cover for description of "NOTES"

For detailed specifications, data sheets, drawings and performance curves visit http:// www.weg.net

Data subject to change without notice.

Severe Duty – Three-Phase Motors

VECTOR DUTY MOTORS

TENV - Three-Phase - Foot Mount - Double C-Face

Designed specifically for inverter operation for applications requiring 1000:1 constant torque turndown ratio

- Class H insulation with Spike resistant Magnet wire and Class F Rise
- NEMA design B
- F1 Mounted (F2 convertible)
- Stainless Steel Nameplate - Laser etched with high contrast background
- Gasketed conduit box

Features that make a difference:

- Constant torque operation from 0 to base speed (1000:1) on PWM Vector Drive
- Constant Horsepower operation up to 150% base speed
- Ready for encoder mount
- With thermostats (1 per phase)
- Special nameplate data for easy drive set-up
- Ready for C-face brake, limited to 10 lb-ft braking torque

Inverter Rated:
1000 : 1 for constant torque

TENV - Foot Mount - Double C-Face

HP	kW	RPM	Frame	Catalog Number	List Price	Mult. Symbol	Approx. Shipping Weight (lbs)	Service Factor	FL Amps @ High	FL. Eff (%)	"C" Dimension (in)	Voltage (V)	Notes
0.33	0.25	1800	56CZ	.3318NT3FVD56C-S	$555	F1	31.56	1.00	.744	74	12.819	230/460	17
0.5	0.37	1800	56	.5018NT3FVD56C-S	$599	F1	28	1.00	1.00	78.5	10.803	230/460	17
0.75	0.55	1800	56	.7518NT3FVD56C-S	$636	F1	31	1.00	1.3	81.5	11.197	230/460	17
1	0.75	1800	56	00118NT3FVD56C-S	$681	F1	38	1.00	1.5	85.5	14.788	230/460	17
		1800	143/5TC	00118NT3FVD143TC-W22	$697	D1	51	1.00	1.41	85.5	14.678	230/460	17;19
		1800	143/5TC	00118NT3HVD143TC-W22	$697	D1	55	1.00	1.13	85.5	14.678	575	17;19
1.5	1.1	1800	56CZ	00158NT3FVD56C-S	$720	F1	45.06	1.00	2.28	86.5	14.788	230/460	17
		1800	143/5TC	00158NT3FVD145TC-W22	$705	D1	60	1.00	2.00	86.5	14.678	230/460	17;19
		1800	143/5TC	00158NT3HVD145TC-W22	$705	D1	55	1.00	1.66	86.5	14.678	575	17;19
2	1.5	1800	143/5TC	00218NT3FVD145TC-W22	$928	D1	62	1.00	2.65	86.5	14.678	230/460	17;19
		1800	143/5TC	00218NT3HVD145TC-W22	$928	D1	62	1.00	2.12	96.5	14.678	575	17;19
3	2.2	1800	182/4TC	00318NT3FVD182TC-W22	$1,150	D1	107	1.00	3.91	89.5	16.569	230/460	17;19
		1800	182/4TC	00318NT3HVD182TC-W22	$1,150	D1	91	1.00	3.12	89.5	16.569	575	17;19
5	3.7	1800	182/4TC	00518NT3FVD184TC-W22	$1,373	D1	116	1.00	7.11	89.5	16.569	230/460	17;19;37
		1800	182/4TC	00518NT3HVD184TC-W22	$1,373	D1	110	1.00	5.70	89.5	16.569	575	17;19;37
7.5	5.5	1800	213/5TC	00718NT3FVD213TC-W22	$1,803	D1	173	1.00	9.07	91.7	20.041	230/460	17;19
		1800	213/5TC	00718NT3HVD213TC-W22	$1,803	D1	169	1.00	7.30	91.7	20.041	575	17;19
10	7.5	1800	213/5TC	01018NT3FVD215TC-W22	$2,157	D1	207	1.00	13.3	91.7	20.041	230/460	17;19;37
		1800	213/5TC	01018NT3HVD215TC-W22	$2,157	D1	192	1.00	10.0	91.7	20.041	575	17;19;37
15	11	1800	254/6TC	01518NT3FVD254TC-W22	$2,567	D1	365	1.00	19.4	92.4	25.569	230/460	17;19
		1800	254/6TC	01518NT3HVD254TC-W22	$2,567	D1	333	1.00	14.2	92.4	25.569	575	17;19
20	15	1800	254/6TC	02018NT3FVD256TC-W22	$3,747	D1	398	1.00	26.6	93.0	25.569	230/460	17;19;37
		1800	254/6TC	02018NT3HVD256TC-W22	$3,747	D1	362	1.00	20.2	93	25.569	575	17;19;37

Note: Flanged motors on Cast Iron frame sizes 143/5 to 254/6 have non-NEMA BA dimension. Refer to mechanical section of this catalog for details.

PERMANENT MAGNET MOTORS

W23 Sync+

Ultra Premium IE5 Efficiency

TEFC

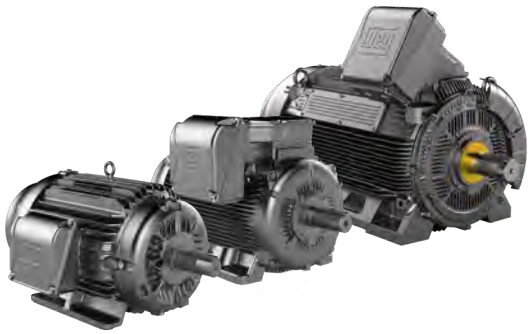

WEG's W23 Sync+ Permanent Magnet motors are designed to be the most efficient motors available to fit standard NEMA and IEC frame sizes and meet the requirements of diverse demanding applications requiring wide Speed ranges and high efficiency. The W23 Sync+ utilises permanent magnets optimized for performance and cost. Ferrite Magnets combined with Synchronous Reluctance designs offer optimized designs on 100HP and Smaller ratings while powerful rare earth magnets (NdFeB), are used on larger sizes
WEG's W22 cast iron platform has a superior cooling system and solid feet for cool operation and lower vibration and noise extending the life of the motor.

Standard Features:

- Class F insulation (Impregnation Resin and magnet wire are class H)
- Stainless Steel Nameplate - Laser etched with high contrast background
- Shaft grounding inside -Standard
- Frames 254T+ with regreasable ball bearings
- Ultra Premium in same frame as NEMA Premium for maximum energy savings
- Reduced bearing temperatures for longer lubrication life
- Super Premium (IE4) available in a reduced frame for size and weight reduction
- Flat efficiency curves for extra savings at partial loads
- Match with WEG CFW500 & 900 drive for optimal performance package

Features that make a difference:

- Insulated ODE bearing hub on frames 405T+
- Internal Shaft Grounding Standard
- Bearing protection meets IP55
- Rubber lead separator between terminal box and frame
- Vibration: 0.04 inches per second or less
- Bearing life 100,000 hours (L-10) (Coupled)
- Maintains high Efficiency over wide Speed/load range
- Non-sparking fan
- Inverter Rated: -Exceed NEMA MG 1 Part 31 insulation
- Matched to WEG CFW500 and CFW900 VFD's

TEFC – Foot Mount

HP	kW	RPM	Frame	Catalog Number	List Price	Mult. Symbol	Approx. Shipping Weight (lbs)	Service Factor	FL Amps @ High	FL. Eff (%)	"C" Dimension (in)	Voltage (V)	Notes
1	0.75	3600	143/5T	00136EU3E143T-SYNC	$866	SYN	37	1	1.29	86.3	13.4	230/460	
		1800	143/5T	00118EU3E143T-SYNC	$851	SYN	40	1	1.27	88.2	13.4	230/460	
		1200	143/5T	00112EU3E145T-SYNC	961	SYN	47	1	1.3	85.7	13.4	230/460	
1.5	1.1	3600	143/5T	00156EU3E143T-SYNC	$873	SYN	37	1	1.93	87.8	13.4	230/460	
		1800	143/5T	00158EU3E145T-SYNC	$884	SYN	47	1	1.87	89.5	13.4	230/460	
		1200	182/4T	00152EU3E182T-SYNC	$1,188	SYN	77	1	2.14	87.2	15.9	230/460	
2	1.5	3600	143/5T	00236EU3E145T-SYNC	$938	SYN	40	1	2.58	88.9	13.4	230/460	
		1800	143/5T	00218EU3E145T-SYNC	$966	SYN	49	1	2.54	90.4	13.4	230/460	
		1200	182/4T	00212EU3E184T-SYNC	$1,276	SYN	86	1	2.89	88.4	15.9	230/460	
3	2.2	3600	182/4T	00336EU3E182T-SYNC	$1,200	SYN	73	1	4.17	90.2	15.9	230/460	
		1800	182/4T	00318EU3E182T-SYNC	$1,085	SYN	85	1	4.14	91.4	15.9	230/460	
		1200	213/5T	00312EU3E213T-SYNC	$1,724	SYN	121	1	3.97	89.7	19.5	230/460	
5	3.7	3600	182/4T	00536EU3E184T-SYNC	$1,349	SYN	78	1	6.93	89.7	15.9	230/460	
		1800	182/4T	00518EU3E184T-SYNC	$1,235	SYN	95	1	7	92.6	15.9	230/460	
		1200	213/5T	00512EU3E215T-SYNC	$1,998	SYN	143	1	6.35	91.2	19.5	230/460	
7.5	5.5	3600	213/5T	00736EU3E213T-SYNC	$1,719	SYN	121	1	8.98	92.6	19.5	230/460	
		1800	213/5T	00718EU3E213T-SYNC	$1,703	SYN	131	1	9.36	93.4	19.5	230/460	
		1200	254/6T	00712EU3E254T-SYNC	$3,068	SYN	225	1	9.4	92.2	25.7	230/460	39
10	7.5	3600	213/5T	01036EU3E215T-SYNC	$1,998	SYN	141	1	11.87	93.3	19.5	230/460	
		1800	213/5T	01018EU3E215T-SYNC	$1,957	SYN	152	1	12.68	94	19.5	230/460	
		1200	254/6T	01012EU3E256T-SYNC	$3,515	SYN	276	1	12.5	92.9	25.7	230/460	39
15	11	3600	254/6T	01536EU3E254T-SYNC	$2,742	SYN	247	1	17.49	94	25.7	230/460	39
		1800	254/6T	01518EU3E254T-SYNC	$2,775	SYN	298	1	18.23	94.6	25.7	230/460	39
		1200	284/6T	01512EU3E284T-SYNC	$4,753	SYN	353	1	19.2	93.7	27.9	230/460	39
20	15	3600	254/6T	02036EU3E256T-SYNC	$3,496	SYN	280	1	22.64	94.5	25.7	230/460	39
		1800	254/6T	02018EU3E256T-SYNC	$3,251	SYN	315	1	25.06	95.1	25.7	230/460	39
		1200	284/6T	02012EU3E286T-SYNC	$5,659	SYN	375	1	26.6	94.3	27.9	230/460	39
25	18.5	3600	284/6TS	02536EU3E284TS-SYNC	$4,357	SYN	353	1	30.5	94.9	27.9	230/460	39
		1800	284/6T	02518EU3E284T-SYNC	$4,013	SYN	392	1	30.5	95.3	27.9	230/460	39
		1200	324/6T	02512EU3E324T-SYNC	$6,795	SYN	470	1	33.4	94.6	29.6	230/460	39
30	22	3600	284/6TS	03036EU3E286TS-SYNC	$5,117	SYN	359	1	36.5	95.1	27.9	230/460	39
		1800	284/6T	03018EU3E286T-SYNC	$4,661	SYN	432	1	37.5	95.5	27.9	230/460	39
		1200	324/6T	03012EU3E326T-SYNC	$7,519	SYN	498	1	39.9	94.9	29.6	230/460	39
40	30	3600	324/6TS	04036EU3Q324TS-SYNC	$6,779	SYN	470	1	52.3	95.5	29.6	460	39
		1800	324/6T	04018EU3E324T-SYNC	$6,040	SYN	518	1	52.5	95.9	29.6	230/460	39
		1200	364/5T	04012EU3E364T-SYNC	$10,673	SYN	785	1	52.7	95.3	34.2	230/460	39
50	37	3600	324/6TS	05036EU3Q326TS-SYNC	$7,577	SYN	522	1	63.8	95.8	29.6	460	39
		1800	324/6T	05018EU3E326T-SYNC	$7,285	SYN	567	1	66	96.1	29.6	230/460	39
		1200	364/5T	05012EU3E365T-SYNC	$12,339	SYN	851	1	63.5	95.6	34.2	230/460	39
60	45	3600	364/5TS	06036EU3Q364TS-SYNC	$11,035	SYN	752	1	75.2	96	34.2	460	39
		1800	364/5T	06018EU3E364T-SYNC	$10,815	SYN	818	1	81.5	96.3	34.2	230/460	39
		1200	404/5T	06012EU3E404T-SYNC	$15,371	SYN	1041	1	81.5	95.8	37.6	230/460	39,43

continued on next page

Please refer to inside back cover for description of "NOTES"

For detailed specifications, data sheets, drawings and performance curves visit http:// www.weg.net

PERMANENT MAGNET MOTORS

TEFC – Foot Mount - cont.

HP	kW	RPM	Frame	Catalog Number	List Price	Mult. Symbol	Approx. Shipping Weight (lbs)	Service Factor	FL Amps @ High	FL. Eff (%)	"C" Dimension (in)	Voltage (V)	Notes
75	55	3600	364/5TS	07536EU3Q365TS-SYNC	$13,113	SYN	818	1	90	96.2	34.2	460	39
		1800	364/5T	07518EU3E365T-SYNC	$12,592	SYN	915	1	94.5	96.5	34.2	230/460	39
		1200	404/5T	07512EU3E405T-SYNC	$17,478	SYN	1120	1	100	96	37.6	230/460	39,43
100	75	3600	404/5TS	10036EU3Q405TS-SYNC	$17,403	SYN	882	1	140	96.5	37.6	460	39,43
		1800	404/5T	10018EU3Q405T-SYNC	$16,980	SYN	1080	1	135	96.7	37.6	460	39,43
		1200	444/5T	10012EU3E444T-SYNC	$22,652	SYN	1268	1	105	96.3	39.2	230/460	43
125	90	3600	444/5TS	12536EU3Q444TS-SYNC	$22,273	SYN	926	1	165	96.6	39.2	460	43
		1800	444/5T	12518EU3Q444T-SYNC	$21,460	SYN	1268	1	125	96.8	39.2	460	43
		1200	444/5T	12512EU3Q445T-SYNC	$25,778	SYN	1268	1	128	96.5	39.2	460	43
150	110	3600	444/5TS	15036EU3Q445TS-SYNC	$27,041	SYN	1014	1	198	96.8	39.2	460	43
		1800	444/5T	15018EU3Q445T-SYNC	$25,067	SYN	1323	1	152	97	39.2	460	43
		1200	445/7T	15012EU3Q447T-SYNC	$29,413	SYN	1402	1	158	96.6	45.0	460	43
200	150	3600	445/7TS	20036EU3Q447TS-SYNC	$33,359	SYN	1250	1	215	97	45.0	460	43
		1800	445/7T	20018EU3Q447T-SYNC	$30,032	SYN	1543	1	210	97.2	45.0	460	43
		1200	447/9T	20012EU3Q449T-SYNC	$35,644	SYN	1590	1	210	96.9	56.3	460	43

Please refer to inside back cover for description of "NOTES"

For detailed specifications, data sheets, drawings and performance curves visit http://www.weg.net

Data subject to change without notice.

Severe Duty – Three-Phase Motors

IEC TRU-METRIC™ - Three Phase

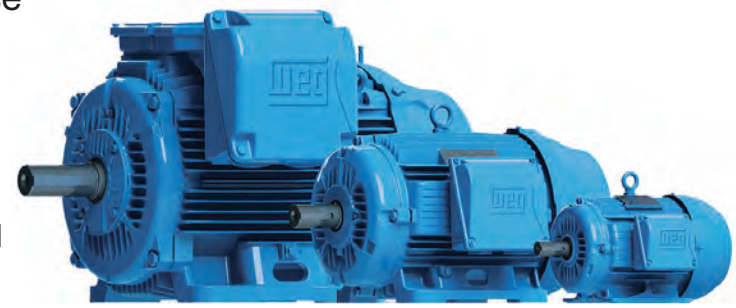

TEFC

This line is designed and built according to IEC Standards 60034 and 60072.

Standard Features:

- 60 Hz (1.25 Service Factor) and 50 Hz (1.0 Service Factor)
- Class F insulation (Impregnation Resin and Magnet wire are class H)
- F2 mounted as standard (F1 convertible)
- Stainless Steel Nameplate - Laser etched with high contrast background
- Regreasable ball bearings (Frames 160 and up)
- Gasketed conduit box
- Class I, Div. 2, Groups A, B, C & D – T3, Class II, Div 2, Groups F & G – T3C (Cast Iron Frames only)
- Suitable for WYE/Delta Start

Features that make a difference:

- 1.25 Service Factor for 60 Hz operation (IE3)
- Optimized ventilation system for cooler operation and low noise levels
- Solid base for lower vibration levels (Cast Iron Frames)
- Frames 225 and up can easily be F1 (B3L) converted by simply rotating the terminal box adapter or F3 by removing it
- Terminal blocks

***Inverter Rated (IE3):**
1000:1 for variable torque
12:1 for constant torque

** Insulated NDE housing standard on 315L and above.*

Severe Duty - Three-Phase Motors

IEC TRU-METRIC™

TEFC - Foot Mount - IE3

HP	kW	RPM	Frame	Catalog Number	List Price	Mult. Symbol	Approx. Shipping Weight (lbs)	Service Factor	FL Amps @ High	FL. Eff (%)	"C" Dimension (in)	Voltage (V)	Notes
5.5	4	900//750	160M	00409ET3Y160M-W22	$1,947	T1	299	1.25	8.17	86.5	23.543	460//380-415/660-690	7
7.5	5.5	1200//1000	132M/L	00512ET3Y132M/L-W22	$1,760	T1	206	1.25	10.8	91.0	20.276	460//380-415/660-690	7
		900//750	160M	00509ET3Y160M-W22	$2,244	T1	306	1.25	11.1	87.5	23.543	460//380-415/660-690	7
10	7.5	1200//1000	160M	00712ET3Y160M-W22	$2,306	T1	306	1.25	13.1	91.0	23.543	460//380-415/660-690	7
		900//750	160L	00709ET3Y160L-W22	$2,774	T1	352	1.25	15.2	88.5	25.276	460//380-415/660-690	7
15	11	3600//3000	160M	01136ET3Y160M-W22	$2,102	T1	304	1.25	17.9	91.7	23.543	460//380-415/660-690	7
		1800//1500	160M	01118ET3Y160M-W22	$1,726	T1	321	1.25	18.2	92.4	23.543	460//380-415/660-690	7
		1200//1000	160L	01112ET3Y160L-W22	$3,160	T1	354	1.25	18.8	91.7	25.276	460//380-415/660-690	7
		900//750	180L	01109ET3Y180L-W22	$4,031	T1	419	1.25	19.5	89.5	27.638	460//380-415/660-690	7
20	15	3600//3000	160M	01536ET3Y160M-W22	$2,413	T1	320	1.25	24.4	91.7	23.543	460//380-415/660-690	7
		1800//1500	160L	01518ET3Y160L-W22	$2,118	T1	375	1.25	250	93.0	25.276	460//380-415/660-690	7
		1200//1000	180L	01512ET3Y180L-W22	$3,884	T1	447	1.25	24.7	91.7	27.638	460//380-415/660-690	7
		900//750	200L	01509ET3Y200L-W22	$5,158	T1	517	1.25	28.0	91.0	30.197	460//380-415/660-690	7
25	18.5	3600//3000	160L	01836ET3Y160L-W22	$2,925	T1	353	1.25	29.9	92.4	25.276	460//380-415/660-690	7
		1800//1500	180M	01818ET3Y180M-W22	$2,689	T1	436	1.25	30.6	93.6	26.142	460//380-415/660-690	7
		1200//1000	200L	01812ET3Y200L-W22	$4,886	T1	552	1.25	30.8	93.0	30.197	460//380-415/660-690	7
		900//750	225S/M	01809ET3Y225S/M-W22	$5,902	T1	830	1.25	31.6	93.0	34.882	460//380-415/660-690	7
30	22	3600//3000	180M	02236ET3Y180M-W22	$3,492	T1	424	1.25	34.7	92.4	26.142	460//380-415/660-690	7
		1800//1500	180L	02218ET3Y180L-W22	$3,225	T1	457	1.25	36.0	93.6	27.638	460//380-415/660-690	7
		1200//1000	200L	02212ET3Y200L-W22	$4,924	T1	601	1.25	37.1	93.0	30.197	460//380-415/660-690	7
		900//750	225S/M	02209ET3Y225S/M-W22	$7,506	T1	885	1.25	37.6	93.0	34.882	460//380-415/660-690	7
40	30	3600//3000	200L	03036ET3Y200L-W22	$4,877	T1	575	1.25	47.1	93.0	30.197	460//380-415/660-690	7
		1800//1500	200L	03018ET3Y200L-W22	$4,312	T1	580	1.25	49.4	94.1	30.197	460//380-415/660-690	7
		1200//1000	225S/M	03012ET3Y225S/M-W22	$7,689	T1	1055	1.25	47.6	94.1	34.882	460//380-415/660-690	7
		900//750	250S/M	03009ET3Y250S/M-W22	$8,858	T1	1078	1.25	50.9	93.6	37.992	460//380-415/660-690	7
50	37	3600//3000	200L	03736ET3Y200L-W22	$5,487	T1	587	1.25	61.3	93.6	30.197	460//380-415/660-690	7
		1800//1500	225S/M	03718ET3Y225S/M-W22	$6,984	T1	1041	1.25	58.5	94.5	34.882	460//380-415/660-690	7
		1200//1000	250S/M	03712ET3Y250S/M-W22	$9,947	T1	1266	1.25	58.8	94.1	37.992	460//380-415/660-690	7
		900//750	280S/M	03709ET3Y280S/M-W22	$11,751	T1	1481	1.25	64.1	94.1	42.165	460//380-415/660-690	7
60	45	3600//3000	225S/M	04536ET3Y225S/M-W22	$7,961	T1	1053	1.25	66.7	94.1	33.701	460//380-415/660-690	7
		1800//1500	225S/M	04518ET3Y225S/M-W22	$7,391	T1	1022	1.25	69.9	950	34.882	460//380-415/660-690	7
		1200//1000	280S/M	04512ET3Y280S/M-W22	$11,023	T1	1681	1.25	74.7	94.5	42.165	460//380-415/660-690	7
		900//750	280S/M	04509ET3Y280S/M-W22	$12,815	T1	1631	1.25	77.0	94.1	42.165	460//380-415/660-690	7
75	55	3600//3000	250S/M	05536ET3Y250S/M-W22	$9,847	T1	1259	1.25	80.3	94.5	37.992	460//380-415/660-690	7
		1800//1500	250S/M	05518ET3Y250S/M-W22	$8,961	T1	1206	1.25	85.1	95.4	37.992	460//380-415/660-690	7
		1200//1000	280S/M	05512ET3Y280S/M-W22	$13,622	T1	1794	1.25	90.2	94.5	42.165	460//380-415/660-690	7
		900//750	315S/M	05509ET3Y315S/M-W22	$15,379	T1	2436	1.25	93.7	94.5	50.157	460//380-415/660-690	7
100	75	3600//3000	280S/M	07536ET3Y280S/M-W22	$12,472	T1	1776	1.25	111	94.5	42.165	460//380-415/660-690	7
		1800//1500	280S/M	07518ET3Y280S/M-W22	$12,353	T1	1738	1.25	116	95.4	42.165	460//380-415/660-690	7
		1200//1000	315S/M	07512ET3Y315S/M-W22	$16,479	T1	2399	1.25	122	95.0	50.157	460//380-415/660-690	7
		900//750	315S/M	07509ET3Y315S/M-W22	$18,647	T1	2701	1.25	127	95.0	50.157	460//380-415/660-690	7
125	90	3600//3000	280S/M	09036ET3Y280S/M-W22	$16,720	T1	1862	1.25	132	95.0	42.165	460//380-415/660-690	7
		1800//1500	280S/M	09018ET3Y280S/M-W22	$15,220	T1	1835	1.25	139	95.4	42.165	460//380-415/660-690	7
		1200//1000	315S/M	09012ET3Y315S/M-W22	$19,448	T1	2601	1.25	146	95.4	50.157	460//380-415/660-690	7
		900//750	315S/M	09009ET3Y315S/M-W22	$21,288	T1	2884	1.25	152	95.0	50.157	460//380-415/660-690	7

continued on next page

Please refer to inside back cover for description of "NOTES"

For detailed specifications, data sheets, drawings and performance curves visit http:// www.weg.net

Data subject to change without notice.

TEFC - Foot Mount - IE3 - *continued*

HP	kW	RPM	Frame	Catalog Number	List Price	Mult. Symbol	Approx. Shipping Weight (lbs)	Service Factor	FL Amps @ High	FL. Eff (%)	"C" Dimension (in)	Voltage (V)	Notes
150	110	3600//3000	315S/M	11036ET3Y315S/M-W22	$21,018	T1	2382	1.25	163	95.0	48.976	460//380-415/660-690	7
		1800//1500	280S/M	11018ET3Y280S/M-W22	$17,078	T1	2210	1.25	170	95.8	42.165	460//380-415/660-690	7
		1200//1000	315S/M	11012ET3Y315S/M-W22	$22,507	T1	2730	1.25	178	95.8	50.157	460//380-415/660-690	7
		900//750	315L	11009ET3Y315L-W22	$27,910	T1	3008	1.25	186	95.4	54.685	460//380-415/660-690	7;43
175	132	3600//3000	315S/M	13236ET3Y315S/M-W22	$23,180	T1	2662	1.25	193	95.4	48.976	460//380-415/660-690	7
		1800//1500	315S/M	13218ET3Y315S/M-W22	$19,732	T1	2540	1.25	203	96.2	50.157	460//380-415/660-690	7
		1200//1000	315S/M	13212ET3Y315S/M-W22	$25,642	T1	3031	1.25	214	95.8	50.157	460//380-415/660-690	7
		900//750	315L	13209ET3Y315L-W22	$33,687	T1	3796	1.25	223	95.4	54.685	460//380-415/660-690	7;43
200	150	3600//3000	315S/M	15036ET3Y315S/M-W22	$26,249	T1	2682	1.25	219	95.4	48.976	460//380-415/660-690	7
		1800//1500	315S/M	15018ET3Y315S/M-W22	$21,772	T1	2784	1.25	228	96.2	50.157	460//380-415/660-690	7
		1200//1000	315L	15012ET3Y315L-W22	$28,298	T1	3557	1.15	240	95.8	54.685	460//380-415/660-690	7;43
250	185	3600//3000	315S/M	18536ET3Y315S/M-W22	$26,529	T1	2900	1.25	269	95.8	48.976	460//380-415/660-690	7
		1800//1500	315S/M	18518ET3Y315S/M-W22	$26,247	T1	2948	1.25	284	96.2	50.157	460//380-415/660-690	7
		1200//1000	355M/L	18512ET3Y355M/L-W22	$43,876	T1	3666	1.15	311	95.8	58.346	460//380-415/660-690	7
300	220	3600//3000	315L	22036ET3Y315L-W22	$44,212	T1	3468	1.25	315	96.2	53.268	460//380-415/660-690	7;43
		1800//1500	315L	22018ET3Y315L-W22	$36,234	T1	3113	1.25	338	96.2	54.685	460//380-415/660-690	7;43
		1200//1000	355M/L	22012ET3Y355M/L-W22	$46,322	T1	4507	1.15	370	95.8	58.346	460//380-415/660-690	7;43
350	260	3600//3000	355M/L	26036ET3Y355M/L-W22	$50,637	T1	4975	1.15	373	96.2	55.591	460//380-415/660-690	7;43;51
		1800//1500	355M/L	26018ET3Y355M/L-W22	$43,761	T1	4218	1.15	399	96.2	58.346	460//380-415/660-690	7;43
		1200//1000	355M/L	26012ET3Y355M/L-W22	$53,001	T1	5075	1.15	436	95.9	58.346	460//380-415/660-690	7;43
400	300	3600//3000	355M/L	30036ET3Y355M/L-W22	$66,321	T1	4034	1.15	315	96.2	55.591	460//380-415/660-690	7;43
		1800//1500	355M/L	30018ET3Y355M/L-W22	$60,292	T1	4337	1.00	466	96.2	58.346	460//380-415/660-690	7;43
450	330	1800//1500	355M/L	33018ET3Y355M/L-W22	$64,557	T1	4906	1.15	505	96.5	58.346	460//380-415/660-690	7;43

TEFC – Foot Mount - IE4

HP	kW	RPM	Frame	Catalog Number	List Price	Mult. Symbol	Approx. Shipping Weight (lbs)	Service Factor	FL Amps @ High	FL. Eff (%)	"C" Dimension (in)	Voltage (V)	Notes
100	75	3600//3000	280S/M	07536EG3Y280S/M-W22	$14,093	T1	1599	1.25	113	95	42.165	460//380-415/660-690	7
		1800//1500	280S/M	07518EG3Y280S/M-W22	$13,959	T1	1654	1.25	119	96.2	42.165	460//380-415/660-690	7
		1200//1000	315S/M	07512EG3Y315S/M-W22	$19,445	T1	2095	1.25	126	95.8	50.157	460//380-415/660-690	7
125	90	3600//3000	280S/M	09036EG3Y280S/M-W22	$18,894	T1	1797	1.25	136	95.4	42.165	460//380-415/660-690	7
		1800//1500	280S/M	09018EG3Y280S/M-W22	$17,199	T1	1819	1.25	141	96.2	42.165	460//380-415/660-690	7
		1200//1000	315S/M	09012EG3Y315S/M-W22	$22,949	T1	2183	1.25	149	95.8	50.157	460//380-415/660-690	7
150	110	3600//3000	315S/M	11036EG3Y315S/M-W22	$23,750	T1	2282	1.25	168	95.4	48.976	460//380-415/660-690	7
		1800//1500	315S/M	11018EG3Y315S/M-W22	$19,298	T1	2062	1.25	175	96.2	50.157	460//380-415/660-690	7
		1200//1000	315S/M	11012EG3Y315S/M-W22	$28,948	T1	2889	1.25	177	96.2	50.157	460//380-415/660-690	7
175	132	3600//3000	315L	13236EG3Y315L-W22	$26,193	T1	2492	1.25	197	95.8	48.976	460//380-415/660-690	7
		1800//1500	315S/M	13218EG3Y315S/M-W22	$22,297	T1	2161	1.25	209	96.5	50.157	460//380-415/660-690	7
		1200//1000	315L	13212EG3Y315L-W22	$30,258	T1	3010	1.15	213	96.2	54.685	460//380-415/660-690	7
200	150	3600//3000	315S/M	15036EG3Y315S/M-W22	$29,661	T1	2569	1.25	226	95.8	48.976	460//380-415/660-690	7
		1800//1500	315L	15018EG3Y315L-W22	$28,047	T1	2602	1.15	230	96.5	50.157	460//380-415/660-690	7
		1200//1000	315L	15012EG3Y315L-W22	$39,402	T1	3131	1.15	239	96.2	54.685	460//380-415/660-690	7,43
250	185	3600//3000	315L	18536EG3Y315L-W22	$30,243	T1	2745	1.15	271	96.2	53.385	460//380-415/660-690	7,43
		1800//1500	315L	18518EG3Y315L-W22	$29,659	T1	2723	1.15	286	96.5	54.685	460//380-415/660-690	7,43
		1200//1000	355M/L	18512EG3Y355M/L-W22	$50,457	T1	3737	1.15	309	96.2	58.346	460//380-415/660-690	7,43

Please refer to inside back cover for description of "NOTES"

For detailed specifications, data sheets, drawings and performance curves visit http:// www.weg.net

IEC TRU-METRIC™

TEFC – Foot Mount - (FF) B5 D-Flange Style with Feet

HP	kW	RPM	Frame	Catalog Number	List Price	Mult. Symbol	Approx. Shipping Weight (lbs)	Service Factor	FL Amps @ High	FL. Eff (%)	"C" Dimension (in)	Voltage (V)	Notes
0.5	0.37	1800//1500	71	.3718EP3EAL71FF-W22	$340	T1	26	1.15	1.06	73.0	9.764	230/460//380-415 V	2;7
0.75	0.55	3600//3000	71	.5536EP3EAL71FF-W22	$366	T1	23	1.15	1.14	76.0	9.764	230/460//380-415 V	2;7
		1800//1500	80	.5518EP3EAL80FF-W22	$383	T1	28	1.15	1.25	77.0	10.866	230/460//380-415 V	2;7
1	0.75	1800//1500	90S/L	.7518ET3EAL90S/LFF-W	$479	T1	42	1.25	1.47	85.5	12.953	230/460//380-415 V	2;7
		1800//1500	90S/L	.7518ET3WAL90S/LFF-W	$479	T1	43	1.25	1.47	85.5	12.953	460//220-240/380-415 V	2;7
2	1.5	1800//1500	90S/L	00158ET3EAL90LFF-W22	$583	T1	49	1.25	2.79	86.5	12.953	208-230/460//380-415 V	2;7
		1800//1500	90L	00158ET3WAL90LFF-W22	$583	T1	51	1.25	2.79	86.5	12.953	460//220-240/380-415 V	
		1200//1000	100L	00152ET3WAL100LFF-W2	$882	T1	76	1.25	3.04	88.5	14.803	460//220-240/380-415 V	2;7
3	2.2	3600/3000	90L	00236ET3WAL90LFF-W22	$815	T1	46	1.25	3.85	86.5	12.953	460//220-240/380-415 V	
		1800//1500	100L	00218ET3EAL100LFF-W2	$700	T1	66	1.25	4.11	89.5	14.803	230/460//380-415 V	2;7
		1800//1500	100L	00218ET3WAL100LFF-W2	$700	T1	68	1.25	4.05	87.5	14.803	460//220-240/380-415 V	
4	3	1800//1500	100L	00318ET3WAL100LFF-W2	$742	T1	77	1.25	5.33	89.5	14.803	460//220-240/380-415 V	2;7
5.5	4	3600//3000	112M	00436ET3YAL112MFF-W2	$944	T1	86	1.25	6.67	88.5	15.472	460//380-415 V	2;7
		1800//1500	112M	00418ET3YAL112MFF-W2	$749	T1	93	1.25	7.28	89.5	15.472	460//380-415 V	2;7
		1200//1000	132M	00412ET3YAL132MFF-W2	$1,333	T1	147	1.25	7.90	89.5	19.291	460//380-415 V	2;7
7.5	5.5	3600/3000	132S	00536ET3YAL132SFF-W2	$1,223	T1	135	1.25	8.97	89.5	19.291	460//380-415 V	39
		1800//1500	132S	00518ET3YAL132SFF-W2	$1,011	T1	142	1.25	9.07	91.7	19.291	460//380-415 V	2;7
10	7.5	3600//3000	132S	00736ET3YAL132SFF-W2	$1,371	T1	147	1.25	12.3	90.2	19.291	460//380-415 V	2;7
		1800//1500	132M	00718ET3YAL132MFF-W2	$1,189	T1	159	1.25	12.2	91.7	19.291	460//380-415 V	2;7
15	11	3600//3000	160M	01136ET3Y160MFF-W22	$2,219	T1	304	1.25	17.9	91.7	23.543	460//380-415 V	7
		1800//1500	160M	01118ET3Y160MFF-W22	$1,843	T1	304	1.25	18.2	92.4	23.543	460//380-415 V	7
20	15	1800//1500	160L	01518ET3Y160LFF-W22	$2,235	T1	358	1.25	25.0	93.0	25.276	460//380-415 V	7
30	22	1800//1500	180L	02218ET3Y180LFF-W22	$3,361	T1	501	1.25	36.0	93.6	27.638	460//380-415 V	7
50	37	3600//3000	200L	03736ET3Y200LFF-W22	$5,789	T1	595	1.25	61.3	93.6	30.197	460//380-415 V	7;51
		1800//1500	225S/M	03718ET3Y225S/MFF-W22	$7,774	T1	1058	1.25	58.5	94.5	34.882	460//380-415 V	7

Please refer to inside back cover for description of "NOTES"

For detailed specifications, data sheets, drawings and performance curves visit http:// www.weg.net

Data subject to change without notice.

Explosion Proof Motors

SINGLE-PHASE

Foot Mount A-129
C-Face – Foot Mount A-129
C-Face – Footless A-129

THREE-PHASE

Foot Mount A-131
C-Face – Foot Mount A-135
C-Face – Footless A-136
JP – Foot Mount A-136
ATEX Foot Mount A-139

Fractional Explosion Proof Motors

C US LISTED

UL File E312535

Features:

- Class F insulation
- 1.0 service factor
- Foot mount motors with and without C-flange
- Class I, Division 1 – Group C & D and Class II, Division 1 – Group E, F & G – T3B
- Thermally Protected
- 24" long leads for remote wiring
- Aluminum endshields
- Not rated for VFD

Features that make a difference:

- 50°C ambient temperature rating
- Three-Phase motors also rated for 50Hz
- Unassembled aluminum conduit box included

Please contact your authorized WEG distributor or go to **weg.net** for further information or additional specifications. **1-800-ASK-4WEG**

www.weg.net

Foot Mount

HP	kW	RPM	Frame	Catalog Number	List Price	Mult. Symbol	Approx. Shipping Weight (lbs)	Service Factor	FL Amps @ High	FL. Eff (%)	"C" Dimension (in)	Voltage (V)	Notes
0.33	0.25	3600	56	**.3336XS1B56**	**$612**	XF	23	1.00	2.60	59.7	11.790	115/208-230	1;3;9;42
		1800	56	**.3318XS1B56**	**$670**	XF	25	1.00	3.00	60.4	11.790	115/208-230	1;3;9;42
0.5	0.37	3600	56	**.5036XS1B56**	**$636**	XF	26	1.00	3.40	66.7	12.040	115/208-230	1;3;9;42
		1800	56	**.5018XS1B56**	**$739**	XF	27	1.00	4.20	62.4	12.290	115/208-230	1;3;9;42
0.75	0.55	3600	56	**.7536XS1B56**	**$717**	XF	30	1.00	4.30	74.5	12.540	115/208-230	1;3;9;42
		1800	56	**.7518XS1B56**	**$868**	XF	34	1.00	5.20	70.8	13.040	115/208-230	1;3;9;42
1	0.75	3600	56	**00136XS1B56**	**$774**	XF	32	1.00	5.30	76.5	13.040	115/208-230	1;3;9;42
		1800	56	**00118XS1B56**	**$988**	XF	37	1.00	6.30	74.8	13.790	115/208-230	1;3;9;42
1.5	1.1	3600	56	**00156XS1C56**	**$1,121**	XF	38	1.00	7.80	80.0	14.040	208-230	1;3;9;42
		1800	56H	**00158XS1C56H**	**$1,324**	XF	48	1.00	7.80	80.0	15.420	208-230	1;3;9;42
2	1.5	3600	56H	**00236XS1C56H**	**$1,408**	XF	43	1.00	9.80	81.1	14.540	208-230	1;3;9;42

C-Face - Foot Mount

HP	kW	RPM	Frame	Catalog Number	List Price	Mult. Symbol	Approx. Shipping Weight (lbs)	Service Factor	FL Amps @ High	FL. Eff (%)	"C" Dimension (in)	Voltage (V)	Notes
0.33	0.25	3600	56C	**.3336XS1B56C**	**$737**	XF	23	1.00	2.60	59.7	11.790	115/208-230	1;3;9;42
		1800	56C	**.3318XS1B56C**	**$816**	XF	25	1.00	3.00	60.4	11.790	115/208-230	1;3;9;42
0.5	0.37	3600	56C	**.5036XS1B56C**	**$717**	XF	26	1.00	3.40	66.7	12.040	115/208-230	1;3;9;42
		1800	56C	**.5018XS1B56C**	**$817**	XF	27	1.00	4.20	62.4	12.290	115/208-230	1;3;9;42
0.75	0.55	3600	56C	**.7536XS1B56C**	**$773**	XF	30	1.00	4.30	74.5	12.540	115/208-230	1;3;9;42
		1800	56C	**.7518XS1B56C**	**$912**	XF	34	1.00	4.52	70.8	13.040	115/208-230	1;3;9;42
1	0.75	3600	56C	**00136XS1B56C**	**$814**	XF	32	1.00	5.30	76.5	13.040	115/208-230	1;3;9;42
		1800	56C	**00118XS1B56C**	**$1,036**	XF	37	1.00	6.30	74.8	13.790	115/208-230	1;3;9;42
1.5	1.1	3600	56C	**00156XS1C56C**	**$1,274**	XF	38	1.00	7.80	80.0	14.040	208-230	1;3;9;42
		1800	56HC	**00158XS1C56HC**	**$1,420**	XF	48	1.00	7.80	80.0	15.420	208-230	1;3;9;42
2	1.5	3600	56HC	**00236XS1C56HC**	**$1,457**	XF	43	1.00	9.80	81.1	14.540	208-230	1;3;9;42

C-Face - Footless

HP	kW	RPM	Frame	Catalog Number	List Price	Mult. Symbol	Approx. Shipping Weight (lbs)	Service Factor	FL Amps @ High	FL. Eff (%)	"C" Dimension (in)	Voltage (V)	Notes
0.33	0.24	3450	56	**.3336XS1B56CFL**	**$759**	XF	23.0	1.0	5.2	59.7	11.79	115/208-230	
		1725	56	**.3318XS1B56CFL**	**$821**	XF	27.0	1.0	6	60.4	11.79	115/208-230	
0.5	0.29	3450	56	**.5036XS1B56CFL**	**$739**	XF	27.8	1.0	6.8	66.7	12.04	115/208-230	
	0.37	1725	56	**.5018XS1B56CFL**	**$842**	XF	29.4	1.0	8.4	62.4	12.29	115/208-230	
0.75	0.55	3450	56	**.7536XS1B56CFL**	**$796**	XF	20.9	1.0	8.6	74.5	12.54	115/208-230	
		1725	56	**.7518XS1B56CFL**	**$939**	XF	34.1	1.0	10.4	70.8	13.29	115/208-230	
1	0.75	3450	56	**00136XS1B56CFL**	**$838**	XF	34.4	1.0	10.8	76.5	13.04	115/208-230	
		1725	56	**00118XS1B56CFL**	**$1,067**	XF	39.8	1.0	12.6	74.8	13.79	115/208-230	
1.5	1.10	3450	56	**00156XS1C56CFL**	**$1,312**	XF	38.0	1.0	7.8	80	14.04	208-230	
		1725	56	**00158XS1C56CFL**	**$1,463**	XF	49.6	1.0	7.8	80	15.42	208-230	

Please refer to inside back cover for description of "NOTES"

For detailed specifications, data sheets, drawings and performance curves visit http:// www.weg.net

Explosion Proof Motors

NEMA Premium® EFFICIENCY MOTORS

WEG Explosion Proof motors are suitable for applications requiring UL or CSA certification for hazardous locations.

Standard Features:

- Class F insulation (Impregnation Resin and Magnet wire are class H)
- F1 Mounted
- Stainless Steel Nameplate - Laser etched with high contrast background
- Regreasable ball bearings (Frames 254T and up)
- Corrosion resistant Epoxy/Polyurethane Paint system (C3 per ISO12944)
- CSA Approved - File LR50962
  - Class I, Division 1, Groups C & D Temperature Code T3C
  - Class II, Division 1, Groups F & G Temperature Code T3C
- UL Listed - File E87848
  - Class I, Division 1, Groups C & D
  - Class II, Division 1, Groups F & G[1]
  - Frame (143T-326T) Temperature Code T3C[2]
  - Frame (364T and up) Temperature Code T3C

[1] Stock units are Class II only for $cCSA_{US}$

[2] T4 Temperature Code available on sine wave power as mod

[3] 1000:1 Constant torque available as factory build with XP blower or as a modification with 20% derated HP.

(Contact Sales for details)

Features that make a difference:

- NPT threaded terminal box
- Non-sparking fan
- Thermostats
- IP55 rated enclosure
- VFD Rated

Available with AEGIS® SGR Inside 213T and larger as stock mod

$_cUL_{US}$ / $_cCSA_{US}$ Inverter Rated: 143T – 586/7

UL Listed - (File E87848)

CSA US - (Certificate 1629892)

Constant Torque[3]

20:1 for frames 143T to 215T - Class I & II
6:1 for frames 254T to 326T – Class I & II
2:1 for frame 364/5T to 586/7T - Class I & II
(Class I only for 449T)

Variable Torque

1000:1 for all frames excluding 449T - Class I & II
1000:1 for 449T - Class I only

For detailed specifications, data sheets, drawings and performance curves visit http:// www.weg.net

Data subject to change without notice.

Foot Mount

HP	kW	RPM	Frame	Catalog Number	List Price	Mult. Symbol	Approx. Shipping Weight (lbs)	Service Factor	FL Amps @ High	FL. Eff (%)	"C" Dimension (in)	Voltage (V)	Notes
0.33	0.25	3600	56	.3336XS3E56	$650	XF	21	1.00	0.60	69.8	10.520	208-230/460	1;3;9;42
		1800	56	.3318XS3E56	$713	XF	23	1.00	0.60	76.7	10.520	208-230/460	1;3;9;17;42
0.5	0.37	3600	56	.5036XS3E56	$782	XF	24	1.00	0.90	73.1	11.790	208-230/460	1;3;9;42
		1800	56	.5018XS3E56	$741	XF	27	1.00	0.85	79.1	11.920	208-230/460	1;3;9;42
0.75	0.55	3600	56	.7536XS3E56	$815	XF	25	1.00	1.20	77.1	11.790	208-230/460	1;3;9;42
		1800	56	.7518XS3E56	$817	XF	28	1.00	1.40	78.6	12.290	208-230/460	1;3;9;42
1	0.75	3600	56	00136XT3E56	$858	XF	27	1.00	1.60	77.0	11.920	230/460	1;3;9;42
		3600	143/5T	00136XT3E143T	$886	XT	64	1.15	1.41	81.5	13.752	230/460	
		1800	56	00118XT3E56	$922	XF	31	1.00	1.60	85.5	13.660	230/460	1;3;9;42
		1800	143/5T	00118XT3E143T	$901	XT	62	1.15	1.43	85.5	13.752	230/460	
		1800	143/5T	00118XT3H143T	$901	XT	62	1.15	1.14	85.5	13.752	575	
		1200	143/5T	00112XT3E145T	$988	XT	71	1.15	1.54	82.5	13.752	230/460	
		1200	143/5T	00112XT3H145T	$988	XT	71	1.15	1.23	82.5	13.752	575	
		900	182/4T	00109XT3E182T	$1,974	XT	120	1.15	2.30	78.5	15.862	230/460	
1.5	1.1	3600	56	00156XT3E56	$1,050	XF	30	1.00	2.10	84.0	12.780	230/460	1;3;9;42
		3600	143/5T	00156XT3E143T	$916	XT	65	1.15	2.05	84.0	13.752	230/460	
		3600	143/5T	00156XT3H143T	$916	XT	64	1.15	1.64	84.0	13.752	575	
		1800	56H	00158XT3E56H	$1,003	XF	41	1.00	2.10	86.5	14.540	230/460	1;3;9;42
		1800	143/5T	00158XT3E145T	$963	XT	70	1.15	2.05	86.5	13.752	230/460	
		1800	143/5T	00158XT3H145T	$963	XT	69	1.15	1.64	86.5	13.752	575	
		1200	182/4T	00152XT3E182T	$1,105	XT	121	1.15	2.32	87.5	15.862	230/460	
		1200	182/4T	00152XT3H182T	$1,105	XT	119	1.15	1.86	87.5	15.862	575	51
		900	182/4T	00159XT3E184T	$1,901	XT	136	1.15	2.70	82.5	15.862	230/460	39
2	1.5	3600	56H	00236XT3E56H	$1,171	XF	35	1.00	2.70	85.5	14.040	230/460	1;3;9;42
		3600	143/5T	00236XT3E145T	$935	XT	72	1.15	2.69	85.5	13.752	230/460	
		3600	143/5T	00236XT3H145T	$935	XT	72	1.15	2.15	85.5	13.752	575	
		1800	56H	00218XT3E56H	$1,090	XF	48	1.00	2.70	86.5	15.040	230/460	1;3;9;42
		1800	143/5T	00218XT3E145T	$995	XT	70	1.15	2.72	86.5	13.752	230/460	
		1800	143/5T	00218XT3H145T	$995	XT	70	1.15	2.18	86.5	13.752	575	
		1200	182/4T	00212XT3E184T	$1,158	XT	137	1.15	3.13	88.5	15.862	230/460	39
		1200	182/4T	00212XT3H184T	$1,158	XT	137	1.15	2.50	88.5	15.862	575	39
		900	213/5T	00209XT3E213T	$2,439	XT	174	1.15	3.45	84.0	19.450	230/460	
3	2.2	3600	182/4T	00336XT3E182T	$1,192	XT	120	1.15	3.76	86.5	15.862	230/460	
		3600	182/4T	00336XT3H182T	$1,192	XT	120	1.15	3.01	86.5	15.862	575	
		1800	182/4T	00318XT3E182T	$1,208	XT	120	1.15	3.91	89.5	15.862	230/460	
		1800	182/4T	00318XT3H182T	$1,208	XT	120	1.15	3.13	89.5	15.862	575	
		1200	213/5T	00312XT3E213T	$1,792	XT	187	1.15	4.41	89.5	19.450	230/460	
		1200	213/5T	00312XT3H213T	$1,792	XT	187	1.15	3.53	89.5	19.450	575	
		900	213/5T	00309XT3E215T	$2,805	XT	205	1.15	4.36	85.5	19.450	230/460	
5	3.7	3600	182/4T	00536XT3E184T	$1,255	XT	135	1.15	6.10	88.5	15.862	230/460	39
		3600	182/4T	00536XT3H184T	$1,255	XT	135	1.15	4.88	88.5	15.862	575	39
		1800	182/4T	00518XT3E184T	$1,220	XT	127	1.15	6.57	89.5	15.862	230/460	39
		1800	182/4T	00518XT3H184T	$1,220	XT	137	1.15	5.26	89.5	15.862	575	39
		1200	213/5T	00512XT3E215T	$1,899	XT	213	1.15	6.83	89.5	19.450	230/460	
		1200	213/5T	00512XT3H215T	$1,899	XT	213	1.15	5.46	89.5	19.450	575	
		900	254T	00509XT3E254T	$3,953	XT	344	1.15	7.93	87.5	23.175	230/460	

continued on next page

Please refer to inside back cover for description of "NOTES"

For detailed specifications, data sheets, drawings and performance curves visit http:// www.weg.net

THREE -PHASE

Foot Mount - *continued*

HP	kW	RPM	Frame	Catalog Number	List Price	Mult. Symbol	Approx. Shipping Weight (lbs)	Service Factor	FL Amps @ High	FL. Eff (%)	"C" Dimension (in)	Voltage (V)	Notes
7.5	5.5	3600	213/5T	00736XT3E213T	$1,646	XT	182	1.15	8.57	89.5	19.450	230/460	
		3600	213/5T	00736XT3H213T	$1,646	XT	182	1.15	6.86	89.5	19.450	575	
		1800	213/5T	00718XT3E213T	$1,897	XT	178	1.15	9.41	91.7	19.450	230/460	
		1800	213/5T	00718XT3H213T	$1,897	XT	177	1.15	7.53	91.7	19.450	575	
		1200	254T	00712XT3E254T	$2,483	XT	344	1.15	9.73	91.0	23.175	230/460	
		1200	254T	00712XT3H254T	$2,483	XT	344	1.15	7.78	91.0	23.175	575	
		900	256T	00709XT3E256T	$4,707	XT	388	1.15	11.6	87.5	24.923	230/460	
10	7.5	3600	213/5T	01036XT3E215T	$1,727	XT	207	1.15	11.6	90.2	19.450	230/460	
		3600	213/5T	01036XT3H215T	$1,727	XT	206	1.15	9.28	90.2	19.450	575	
		1800	L213/5T	01018XT3E215T	$1,997	XT	149	1.15	12.7	91.7	20.631	230/460	
		1800	L213/5T	01018XT3H215T	$1,997	XT	213	1.15	10.2	91.7	20.631	575	
		1200	256T	01012XT3E256T	$2,900	XT	387	1.15	13.3	91.0	24.923	230/460	
		1200	256T	01012XT3H256T	$2,900	XT	387	1.15	10.6	91.0	24.923	575	
		900	284T	01009XT3E284T	$5,668	XT	496	1.15	13.3	91.0	26.407	230/460	
15	11	3600	254T	01536XT3E254T	$2,387	XT	343	1.15	17.4	91.0	23.175	230/460	
		3600	254T	01536XT3H254T	$2,387	XT	342	1.15	13.9	91.0	23.175	575	
		1800	254T	01518XT3E254T	$2,653	XT	348	1.15	18.4	92.4	23.175	230/460	
		1800	254T	01518XT3H254T	$2,653	XT	302	1.15	14.7	92.4	23.175	575	
		1200	284T	01512XT3E284T	$4,048	XT	498	1.15	17.5	91.7	26.407	230/460	
		1200	284T	01512XT3H284T	$4,048	XT	497	1.15	14.0	91.7	26.407	575	
		900	286T	01509XT3E286T	$7,102	XT	536	1.15	19.0	91.0	27.905	230/460	
20	15	3600	256T	02036XT3E256T	$3,083	XT	380	1.15	23.2	91.0	24.923	230/460	
		3600	256T	02036XT3H256T	$3,083	XT	379	1.15	18.6	91.0	24.923	575	
		1800	256T	02018XT3E256T	$3,008	XT	391	1.15	25.0	93.0	24.923	230/460	
		1800	256T	02018XT3H256T	$3,008	XT	392	1.15	20.0	93.0	24.923	575	
		1200	286T	02012XT3E286T	$4,444	XT	537	1.15	24.2	91.7	27.905	230/460	
		1200	286T	02012XT3H286T	$4,444	XT	536	1.15	19.4	91.7	27.905	575	
		900	324T	02009XT3E324T	$8,390	XT	654	1.15	27.5	92.4	29.602	230/460	
25	18.5	3600	284TS	02536XT3E284TS	$4,188	XT	493	1.15	28.6	92.4	25.033	230/460	
		3600	284TS	02536XT3H284TS	$4,188	XT	493	1.15	22.9	92.4	25.033	575	
		1800	284T	02518XT3E284T	$3,886	XT	486	1.15	29.9	93.6	26.407	230/460	
		1800	284T	02518XT3H284T	$3,886	XT	506	1.15	23.9	93.6	26.407	575	
		1200	324T	02512XT3E324T	$5,375	XT	686	1.15	30.4	93.0	29.602	230/460	
		1200	324T	02512XT3H324T	$5,375	XT	665	1.15	24.3	93.0	29.602	575	
		900	326T	02509XT3E326T	$10,512	XT	713	1.15	35.4	92.4	31.106	230/460	
30	22	3600	286TS	03036XT3E286TS	$4,262	XT	544	1.15	33.7	93.0	26.531	230/460	
		3600	286TS	03036XT3H286TS	$4,262	XT	543	1.15	27.0	93.0	26.531	575	
		1800	286T	03018XT3E286T	$4,296	XT	650	1.15	36.0	93.6	27.905	230/460	
		1800	286T	03018XT3H286T	$4,296	XT	546	1.15	28.8	93.6	27.905	575	
		1200	326T	03012XT3E326T	$6,196	XT	747	1.15	36.7	93.0	31.106	230/460	
		1200	326T	03012XT3H326T	$6,196	XT	734	1.15	29.4	93.0	31.106	575	
		900	364/5T	03009XT3E364T	$15,071	XT	1010	1.15	38.5	93.0	33.701	230/460	

continued on next page

Please refer to inside back cover for description of "NOTES"

For detailed specifications, data sheets, drawings and performance curves visit http:// www.weg.net

Data subject to change without notice.

Foot Mount - *continued*

HP	kW	RPM	Frame	Catalog Number	List Price	Mult. Symbol	Approx. Shipping Weight (lbs)	Service Factor	FL Amps @ High	FL. Eff (%)	"C" Dimension (in)	Voltage (V)	Notes
40	30	3600	324TS	04036XT3E324TS	$5,583	XT	669	1.15	45.8	93.6	28.102	230/460	
		3600	324TS	04036XT3H324TS	$5,583	XT	669	1.15	36.6	93.6	28.102	575	
		1800	324T	04018XT3E324T	$5,380	XT	690	1.15	48.2	94.1	29.602	230/460	
		1800	324T	04018XT3H324T	$5,380	XT	693	1.15	38.6	94.1	29.602	575	
		1200	364/5T	04012XT3E364T	$10,576	XT	1091	1.15	47.1	94.1	33.701	230/460	
		1200	364/5T	04012XT3H364T	$10,576	XT	1084	1.15	37.7	94.1	33.701	575	
		900	364/5T	04009XT3E365T	$15,505	XT	1110	1.15	52.2	93.6	33.701	230/460	
50	37	3600	326TS	05036XT3E326TS	$6,582	XT	731	1.15	55.5	94.1	29.606	230/460	
		3600	326TS	05036XT3H326TS	$6,582	XT	723	1.15	44.4	94.1	29.606	575	
		1800	326T	05018XT3E326T	$6,545	XT	702	1.15	60.6	94.5	31.106	230/460	
		1800	326T	05018XT3H326T	$6,545	XT	732	1.15	48.5	94.5	31.106	575	
		1200	364/5T	05012XT3E365T	$11,197	XT	1124	1.15	58.1	94.1	33.701	230/460	
		1200	364/5T	05012XT3H365T	$11,197	XT	1113	1.15	46.5	94.1	33.701	575	
		900	404/5T	05009XT3E404T	$22,443	XT	1338	1.15	68.0	93.6	38.074	230/460	
60	45	3600	364/5TS	06036XT3E364TS	$9,988	XT	1109	1.15	68.2	94.1	31.575	230/460	
		3600	364/5TS	06036XT3H364TS	$9,988	XT	1114	1.15	54.6	94.1	31.575	575	
		1800	364/5T	06018XT3E364T	$10,460	XT	1146	1.15	68.3	95.0	33.701	230/460	
		1800	364/5T	06018XT3H364T	$10,460	XT	1112	1.15	54.6	95.0	33.701	575	
		1200	404/5T	06012XT3E404T	$13,196	XT	1279	1.15	70.3	94.5	38.074	230/460	
		1200	404/5T	06012XT3H404T	$13,196	XT	1222	1.15	56.2	94.5	38.074	575	
		900	404/5T	06009XT3E405T	$26,900	XT	1336	1.15	75.9	93.0	38.074	230/460	
75	55	3600	364/5TS	07536XT3E365TS	$11,285	XT	1110	1.15	82.4	94.1	31.575	230/460	
		3600	364/5TS	07536XT3H365TS	$11,285	XT	1033	1.15	65.9	94.1	31.575	575	
		1800	364/5T	07518XT3E365T	$11,125	XT	1146	1.15	83.2	95.4	33.701	230/460	
		1800	364/5T	07518XT3H365T	$11,125	XT	1133	1.15	66.6	95.4	33.701	575	
		1200	404/5T	07512XT3E405T	$13,836	XT	1330	1.15	87.0	94.5	38.074	230/460	
		900	444/5T	07509XT3E444T	$29,094	XT	2077	1.15	92.2	93.6	43.797	230/460	
100	75	3600	404/5TS	10036XT3E405TS	$12,999	XT	1290	1.15	110	95.0	35.074	230/460	
		3600	404/5TS	10036XT3G405TS	$12,999	XT	1214	1.15	110	95.0	35.074	460	
		3600	404/5TS	10036XT3H405TS	$12,999	XT	1296	1.15	88.1	95.0	35.074	575	
		1800	404/5T	10018XT3E405T	$14,206	XT	1317	1.15	113	95.4	38.074	230/460	
		1800	404/5T	10018XT3G405T	$14,206	XT	1313	1.15	113	95.4	38.074	460	
		1800	404/5T	10018XT3H405T	$14,206	XT	1322	1.15	90.4	95.4	38.074	575	
		1200	444/5T	10012XT3E444T	$21,032	XT	2268	1.15	121	95.0	43.797	230/460	
		1200	444/5T	10012XT3G444T	$21,032	XT	2233	1.15	121	95.0	43.797	460	
		900	444/5T	10009XT3E445T	$31,191	XT	2225	1.15	125	94.1	43.797	230/460	
		900	444/5T	10009XT3G445T	$31,191	XT	2061	1.15	125	94.1	43.797	460	
125	90	3600	444/5TS	12536XT3G444TS	$20,874	XT	2173	1.15	132	95.0	40.047	460	
		1800	444/5T	12518XT3E444T	$19,961	XT	2214	1.15	142	95.4	43.797	230/460	
		1800	444/5T	12518XT3G444T	$19,961	XT	2208	1.15	142	95.4	43.797	460	
		1200	444/5T	12512XT3G445T	$21,537	XT	2428	1.15	150	95.0	43.797	460	

continued on next page

Please refer to inside back cover for description of "NOTES"

For detailed specifications, data sheets, drawings and performance curves visit http:// www.weg.net

THREE -PHASE

Foot Mount - *continued*

HP	kW	RPM	Frame	Catalog Number	List Price	Mult. Symbol	Approx. Shipping Weight (lbs)	Service Factor	FL Amps @ High	FL. Eff (%)	"C" Dimension (in)	Voltage (V)	Notes
150	110	3600	444/5TS	15036XT3G445TS	$21,320	XT	2345	1.15	161	95.4	40.047	460	
		1800	444/5T	15018XT3E445T	$21,557	XT	2364	1.15	170	95.8	43.797	230/460	
		1800	444/5T	15018XT3G445T	$21,557	XT	2358	1.15	170	95.8	43.797	460	
		1800	444/5T	15018XT3H445T	$21,557	XT	2353	1.15	136	95.8	43.797	575	
		1200	447T	15012XT3G447T	$32,370	XT	2828	1.15	174	95.8	47.339	460	
		1200	504/5T	15012XT3G504	$32,370	XT	2869	1.15	174	95.8	49.445	460	43;51
200	150	3600	447TS	20036XT3G447TS	$29,446	XT	2656	1.15	221	95.8	43.589	460	
		1800	447T	20018XT3G447T	$29,397	XT	2585	1.15	230	96.2	47.339	460	
		1800	504/5T	20018XT3G504	$29,397	XT	2534	1.15	230	96.2	49.445	460	37;43
		1200	447T	20012XT3G447T	$33,613	XT	2848	1.15	249	95.8	47.339	460	
250	185	3600	447TS	25036XT3G447TS	$31,124	XT	2774	1.15	269	95.8	43.589	460	
		1800	447T	25018XT3G447T	$32,866	XT	2853	1.15	284	96.2	47.339	460	
		1800	447T	25018XT3H447T	$32,866	XT	2742	1.15	227	96.2	47.339	575	
		1200	449T	25012XT3G449T	$48,048	XT	3352	1.15	299	95.8	54.996	460	
300	220	3600	449TS	30036XT3G449TS	$48,747	XT	3185	1.15	320	95.8	51.246	460	37;51
		1800	449T	30018XT3G449T	$42,566	XT	3280	1.15	334	96.2	54.996	460	37
350	260	3600	449TS	35036XT3G449TS	$65,868	XT	3802	1.15	379	95.8	51.246	460	
		1800	586/7	35018XT3G586/7	$57,159	XT	4300	1.15	395	96.2	61.389	460	37
		1200	586/7	35012XT3G586/7	$71,652	XT	4655	1.15	421	95.8	61.389	460	43
400	300	1800	586/7	40018XT3G586/7	$61,096	XT	4345	1.15	460	96.2	61.389	460	43
		1200	586/7	40012XT3G586/7	$75,473	XT	5267	1.15	479	95.8	61.389	460	43
450	330	1800	586/7	45018XT3G586/7	$65,201	XT	4747	1.15	501	96.2	61.389	460	19;43
500	370	1800	586/7	50018XT3G586/7	$70,086	XT	5063	1.00	568	96.2	61.389	460	1;19;43

Please refer to inside back cover for description of "NOTES"

For detailed specifications, data sheets, drawings and performance curves visit http:// www.weg.net

Data subject to change without notice.

C-Face - Foot Mount

HP	kW	RPM	Frame	Catalog Number	List Price	Mult. Symbol	Approx. Shipping Weight (lbs)	Service Factor	FL Amps @ High	FL. Eff (%)	"C" Dimension (in)	Voltage (V)	Notes
0.33	0.25	3600	56C	.3336XS3E56C	$821	XF	21	1.00	0.60	69.8	10.520	208-230/460	1;3;9;42
		1800	56C	.3318XS3E56C	$877	XF	23	1.00	0.60	76.7	10.520	208-230/460	1;3;9;17;42
0.5	0.37	3600	56C	.5036XS3E56C	$856	XF	24	1.00	0.90	73.1	11.790	208-230/460	1;3;9;42
		1800	56C	.5018XS3E56C	$926	XF	27	1.00	0.85	79.1	11.920	208-230/460	1;3;9;42
0.75	0.55	3600	56C	.7536XS3E56C	$884	XF	25	1.00	1.20	77.1	11.790	208-230/460	1;3;9;42
		1800	56C	.7518XS3E56C	$944	XF	28	1.00	1.40	78.6	12.290	208-230/460	1;3;9;42
1	0.75	3600	56C	00136XT3E56C	$924	XF	27	1.00	1.60	77.0	11.920	230/460	1;3;9;42
		1800	56C	00118XT3E56C	$1,007	XF	31	1.00	1.60	82.2	13.660	230/460	1;3;9;42
		1800	143/5TC	00118XT3E143TC	$1,054	XT	71	1.15	1.43	85.5	13.752	230/460	
		1200	143/5TC	00112XT3E145TC	$1,107	XT	80	1.15	1.54	82.5	13.752	230/460	
1.5	1.1	3600	56C	00156XT3E56C	$1,038	XF	30	1.00	2.10	84.0	12.780	230/460	1;3;9;42
		3600	143/5TC	00156XT3E143TC	$1,069	XT	73	1.15	2.05	84.0	13.752	230/460	
		1800	56HC	00158XT3E56HC	$1,011	XF	41	1.00	2.10	86.5	14.540	230/460	1;3;9;42
		1800	143/5TC	00158XT3E145TC	$1,116	XT	79	1.15	2.05	86.5	13.752	230/460	
		1800	143/5TC	00158XT3H145TC	$1,024	XT	75	1.15	1.64	86.5	13.752	575	
		1200	182/4TC	00152XT3E182TC	$1,270	XT	123	1.15	2.32	87.5	15.862	230/460	
2	1.5	3600	56HC	00236XT3E56HC	$1,125	XF	35	1.00	2.70	85.5	14.040	230/460	1;3;9;42
		3600	143/5TC	00236XT3E145TC	$1,045	XT	81	1.15	2.69	85.5	13.752	230/460	
		1800	56HC	00218XT3E56HC	$1,162	XF	48	1.00	2.70	86.5	15.040	230/460	1;3;9;42
		1800	143/5TC	00218XT3E145TC	$1,148	XT	79	1.15	2.72	86.5	13.752	230/460	
		1800	143/5TC	00218XT3H145TC	$1,148	XT	78	1.15	2.18	86.5	13.752	575	
		1200	182/4TC	00212XT3E184TC	$1,323	XT	140	1.15	3.13	88.5	15.862	230/460	39
3	2.2	3600	182/4TC	00336XT3E182TC	$1,262	XT	122	1.15	3.76	86.5	15.862	230/460	
		1800	182/4TC	00318XT3E182TC	$1,373	XT	122	1.15	3.91	89.5	15.862	230/460	
		1800	182/4TC	00318XT3H182TC	$1,373	XT	122	1.15	3.13	89.5	15.862	575	
		1200	213/5TC	00312XT3E213TC	$1,868	XT	195	1.15	4.41	89.5	19.450	230/460	
5	3.7	3600	182/4TC	00536XT3E184TC	$1,325	XT	137	1.15	6.10	88.5	15.862	230/460	39
		3600	182/4TC	00536XT3H184TC	$1,325	XT	137	1.15	4.88	88.5	15.862	575	39
		1800	182/4TC	00518XT3E184TC	$1,385	XT	139	1.15	6.57	89.5	15.862	230/460	39
		1800	182/4TC	00518XT3H184TC	$1,385	XT	139	1.15	5.26	89.5	15.862	575	39
		1200	213/5TC	00512XT3E215TC	$1,975	XT	221	1.15	6.83	89.5	19.450	230/460	
7.5	5.5	3600	213/5TC	00736XT3E213TC	$1,722	XT	190	1.15	8.57	89.5	19.450	230/460	
		1800	213/5TC	00718XT3E213TC	$2,080	XT	186	1.15	9.41	91.7	19.450	230/460	
		1800	213/5TC	00718XT3H213TC	$2,080	XT	185	1.15	7.53	91.7	19.450	575	
10	7.5	3600	213/5TC	01036XT3E215TC	$1,803	XT	215	1.15	11.6	90.2	19.450	230/460	
		3600	213/5TC	01036XT3H215TC	$1,803	XT	214	1.15	9.28	90.2	19.450	575	
		1800	L215TC	01018XT3E215TC	$2,180	XT	215	1.15	12.7	91.7	20.631	230/460	
		1800	L215TC	01018XT3H215TC	$2,180	XT	221	1.15	10.2	91.7	20.631	575	
15	11	3600	254TC	01536XT3E254TC	$2,490	XT	346	1.15	17.4	91.0	23.175	230/460	
		1800	254TC	01518XT3E254TC	$2,976	XT	306	1.15	18.4	92.4	23.175	230/460	
		1800	254TC	01518XT3H254TC	$2,976	XT	305	1.15	14.7	92.4	23.175	575	
20	15	1800	256TC	02018XT3E256TC	$3,331	XT	395	1.15	25.0	93.0	24.923	230/460	
		1800	256TC	02018XT3H256TC	$3,111	XT	394	1.15	20.0	93.0	24.923	575	
25	18.5	1800	284TC	02518XT3E284TC	$4,262	XT	514	1.15	29.9	93.6	26.407	230/460	
		1800	284TC	02518XT3H284TC	$4,262	XT	513	1.15	23.9	93.6	26.407	575	

continued on next page

Please refer to inside back cover for description of "NOTES"

For detailed specifications, data sheets, drawings and performance curves visit http:// www.weg.net

THREE -PHASE

C-Face - Foot Mount - *continued*

HP	kW	RPM	Frame	Catalog Number	List Price	Mult. Symbol	Approx. Shipping Weight (lbs)	Service Factor	FL Amps @ High	FL. Eff (%)	"C" Dimension (in)	Voltage (V)	Notes
30	22	1800	286TC	03018XT3E286TC	$4,672	XT	555	1.15	36.0	93.6	27.905	230/460	
40	30	1800	324TC	04018XT3E324TC	$5,919	XT	700	1.15	48.2	94.1	29.602	230/460	
50	37	1800	326TC	05018XT3E326TC	$7,084	XT	740	1.15	60.6	94.5	31.106	230/460	
60	45	1800	364/5TC	06018XT3E364TC	$11,116	XT	1126	1.15	68.3	95.0	33.701	230/460	
75	55	1800	364/5TC	07518XT3E365TC	$11,781	XT	1147	1.15	83.2	95.4	33.701	230/460	
100	75	1800	404/5TC	10018XT3E405TC	$14,993	XT	1335	1.15	113	95.4	38.074	230/460	

C-Face - Footless

HP	kW	RPM	Frame	Catalog Number	List Price	Mult. Symbol	Approx. Shipping Weight (lbs)	Service Factor	FL Amps @ High	FL. Eff (%)	"C" Dimension (in)	Voltage (V)	Notes
1	0.75	1800	143/5TC	00118XT3ER143TC	$1,072	XT	71	1.15	1.43	85.5	14.460	230/460	15
1.5	1.1	1800	143/5TC	00158XT3ER145TC	$1,135	XT	78	1.15	2.05	86.5	14.460	230/460	15
2	1.5	1800	143/5TC	00218XT3ER145TC	$1,168	XT	78	1.15	2.72	86.5	14.460	230/460	15
3	2.2	1800	182/4TC	00318XT3ER182TC	$1,397	XT	128	1.15	3.91	89.5	17.082	230/460	15;39
5	3.7	1800	182/4TC	00518XT3ER184TC	$1,409	XT	142	1.15	6.57	89.5	17.082	230/460	15;39
7.5	5.5	1800	213/5TC	00718XT3ER213TC	$2,118	XT	186	1.15	9.41	91.7	19.450	230/460	15
10	7.5	1800	L215TC	01018XT3ER215TC	$2,220	XT	220	1.15	12.7	91.7	23.493	230/460	15
15	11	1800	254TC	01518XT3ER254TC	$3,029	XT	320	1.15	18.4	92.4	25.025	230/460	15
20	15	1800	256TC	02018XT3ER256TC	$3,391	XT	403	1.15	25.0	93.0	26.773	230/460	15
25	18.5	1800	284TC	02518XT3ER284TC	$4,340	XT	523	1.15	29.9	93.6	28.651	230/460	15
30	22	1800	286TC	03018XT3ER286TC	$4,758	XT	548	1.15	36.0	93.6	30.149	230/460	15
40	30	1800	324TC	04018XT3ER324TC	$6,027	XT	702	1.15	48.2	94.1	32.240	230/460	15
50	37	1800	326TC	05018XT3ER326TC	$7,215	XT	739	1.15	60.6	94.5	33.744	230/460	15

JP - Foot Mount

HP	kW	RPM	Frame	Catalog Number	List Price	Mult. Symbol	Approx. Shipping Weight (lbs)	Service Factor	FL Amps @ High	FL. Eff (%)	"C" Dimension (in)	Voltage (V)	Notes
3	2.2	1800	182/4JP	00318XT3E182JP	$1,586	XT	119	1.15	3.91	89.5	20.431	230/460	
		1800	182/4JP	00318XT3H182JP	$1,586	XT	119	1.15	3.13	89.5	20.431	575	
5	3.7	1800	182/4JP	00518XT3E184JP	$1,609	XT	136	1.15	6.57	89.5	20.306	230/460	39
		1800	182/4JP	00518XT3H184JP	$1,609	XT	136	1.15	5.26	89.5	20.306	575	39

Please refer to inside back cover for description of "NOTES"

For detailed specifications, data sheets, drawings and performance curves visit http:// www.weg.net

Data subject to change without notice.

WEG offers a complete range of products and services for the Oil & Gas segment

WEG / EM has manufactured motors and generators for the petroleum industry for over 100 years. We understand that every application is different and will work with the customer to meet their needs.

Motors can be designed to API Standards (where applicable), meeting welding, structural, vibration and testing requirements. Motors can be built for operation in classified hazardous areas per NEC or IEC/EN (ATEX) requirements. For synchronous motors, standard brushless excitation is non-sparking for hazardous atmospheres.

Synchronous and Induction Motors
Up to 150,000 HP

Turbogenerators
Up to 150 MW

NEMA, Above NEMA and IEC Low Voltage Motors
Up to 2,000 HP

Low and Medium Voltage Drives and Soft Starters
Up to 10,000 HP

Please refer to inside back cover for description of "NOTES"

For detailed specifications, data sheets, drawings and performance curves visit http:// www.weg.net

Data subject to change without notice.

Three-Phase IEC - Flameproof Motors
ATEX Motors

EXPLOSION PROOF

TEFC - Ex db - IE3

- 50 Hz and and 60 Hz rated (1.00 Service Factor)
- Class F insulation (impregnation resin and magnet wire are class H)
- F3 mounted as standard
- Stainless Steel Nameplate - Laser etched with high contrast background
- Regreasable ball bearings (Frames 225 and up)
- Gasketed conduit box
- Zone 1 and 2, Groups IIA and IIB, class of temperature T4
- Suitable for WYE/Delta Start
- Design N
- Conductive plastic fan (frames 63 up to 315)
- Aluminum fan (frame 355)
- Lip Seal on both endshields
- Thermistors 1 per phase
- IP56
- CT: 2:1
- VFD Suitable

TEFC – Ex db - IE3

HP	kW	RPM	Frame	Catalog Number	List Price	Mult. Symbol	Approx. Shipping Weight (lbs)	Service Factor	FL Amps @ High	FL. Eff (%)	"C" Dimension (in)	Voltage (V)	Notes
1	0.75	3000//3600	80	**E0.7536XT3WAX80F3-W2**	**$1,432**	XD	51	1	1.65	81.1	12.205	220-240/380-415//440-460	1;8;27
		1500//1800	80	**E0.7518XT3WAX80F3-W2**	**$1,450**	XD	55	1	1.66	82.5	12.205	220-240/380-415//440-460	1;8;27
		1000//1200	90S/L	**E0.7512XT3WAX90LF3-W**	**$1,355**	XD	103	1	1.91	79.1	15.118	220-240/380-415//440-460	1;8;27
1.5	1.1	3000//3600	80	**E00136XT3WAX80F3-W2**	**$1,489**	XD	53	1	2.32	83.4	12.205	220-240/380-415//440-460	1;8;27
		1500//1800	90S/L	**E00118XT3WAX90LF3-W**	**$1,507**	XD	100	1	2.34	84.8	15.118	220-240/380-415//440-460	1;8;27
		1000//1200	100L	**E00112XT3WAX100LF3-W**	**$1,794**	XD	108	1	2.76	81.5	17.244	220-240/380-415//440-460	1;8;27
2	1.5	3000//3600	90S/L	**E00156XT3WAX90SF3-W**	**$1,549**	XD	96	1	3.1	84.2	15.118	220-240/380-415//440-460	1;8;27
		1500//1800	90S/L	**E00158XT3WAX90LF3-W**	**$1,681**	XD	106	1	3.16	85.7	15.118	220-240/380-415//440-460	1;8;27
		1000//1200	100L	**E00152XT3WAX100LF3-W**	**$1,985**	XD	119	1	3.71	82.8	17.244	220-240/380-415//440-460	1;8;27
3	2.2	3000//3600	90S/L	**E00236XT3WAX90LF3-W**	**$1,733**	XD	103	1	4.37	86.5	15.118	220-240/380-415//440-460	1;8;27
		1500//1800	100L	**E00218XT3WAX100LF3-W**	**$2,015**	XD	115	1	4.56	87.2	17.244	220-240/380-415//440-460	1;8;27
		1000//1200	112M	**E00212XT3YAX112MF3-W**	**$2,305**	XD	157	1	5.24	84.7	17.953	380-415/660-690//440-460	1;8;27
4	3	3000//3600	100L	**E00336XT3WAX100LF3-W**	**$2,167**	XD	115	1	5.68	87.4	17.244	220-240/380-415//440-460	1;8;27
		1500//1800	100L	**E00318XT3WAX100LF3-W**	**$2,415**	XD	136	1	6.07	88.1	17.244	220-240/380-415//440-460	1;8;27
		1000//1200	132S/M	**E00312XT3YAX132SF3-W**	**$3,643**	XD	214	1	6.87	85.6	20.63	380-415/660-690//440-460	1;8;27
5.5	4	3000//3600	112M	**E00436XT3YAX112MF3-W**	**$2,728**	XD	146	1	7.58	88.4	17.953	380-415/660-690//440-460	1;8;27
		1500//1800	112M	**E00418XT3YAX112MF3-W**	**$2,789**	XD	157	1	8.35	88.9	17.953	380-415/660-690//440-460	1;8;27
		1000//1200	132S/M	**E00412XT3YAX132MF3-W**	**$4,076**	XD	214	1	9.03	86.8	20.63	380-415/660-690//440-460	1;8;27
7.5	5.5	3000//3600	132S/M	**E00536XT3YAX132SF3-W**	**$3,484**	XD	196	1	10.6	89.2	20.63	380-415/660-690//440-460	1;8;27
		1500//1800	132S/M	**E00518XT3YAX132SF3-W**	**$3,418**	XD	207	1	10.4	89.8	20.63	380-415/660-690//440-460	1;8;27
		1000//1200	132S/M	**E00512XT3YAX132MF3-W**	**$4,294**	XD	254	1	13	88	20.63	380-415/660-690//440-460	1;8;27
10	7.5	3000//3600	132S/M	**E00736XT3YAX132SF3-W**	**$4,018**	XD	214	1	13.9	90.3	20.63	380-415/660-690//440-460	1;8;27
		1500//1800	132S/M	**E00718XT3YAX132MF3-W**	**$4,164**	XD	225	1	13.9	90.4	20.63	380-415/660-690//440-460	1;8;27
		1000//1200	160M/L	**E00712XT3YAX160MF3-W**	**$5,669**	XD	381	1	14.6	89.1	28.228	380-415/660-690//440-460	1;8;27
15	11	3000//3600	160M/L	**E01136XT3YAX160MF3-W**	**$4,687**	XD	405	1	20.2	91.4	28.228	380-415/660-690//440-460	1;8;27
		1500//1800	160M/L	**E01118XT3YAX160MF3-W**	**$4,691**	XD	388	1	20.7	91.4	28.228	380-415/660-690//440-460	1;8;27
		1000//1200	160M/L	**E01112XT3YAX160LF3-W**	**$5,968**	XD	430	1	21.7	90.5	28.228	380-415/660-690//440-460	1;8;27
20	15	3000//3600	160M/L	**E01536XT3YAX160MF3-W**	**$5,564**	XD	422	1	27.7	91.9	28.228	380-415/660-690//440-460	1;8;27
		1500//1800	160M/L	**E01518XT3YAX160LF3-W**	**$5,207**	XD	441	1	28	92.1	28.228	380-415/660-690//440-460	1;8;27
		1000//1200	180M/L	**E01512XT3YAX180LF3-W**	**$7,273**	XD	542	1	27.8	91.6	29.606	380-415/660-690//440-460	1;8;27
25	18.5	3000//3600	160M/L	**E01836XT3YAX160LF3-W**	**$6,684**	XD	441	1	33.6	92.4	28.228	380-415/660-690//440-460	1;8;27
		1500//1800	180M/L	**E01818XT3YAX180MF3-W**	**$6,847**	XD	542	1	34.7	92.6	29.606	380-415/660-690//440-460	1;8;27
		1000//1200	200M/L	**E01812XT3YAX200LF3-W**	**$9,468**	XD	646	1	36.5	91.7	32.323	380-415/660-690//440-460	1;8;27
30	22	3000//3600	180M/L	**E02236XT3YAX180MF3-W**	**$8,022**	XD	503	1	39.3	92.7	29.606	380-415/660-690//440-460	1;8;27
		1500//1800	180M/L	**E02218XT3YAX180LF3-W**	**$7,578**	XD	562	1	40.6	93	29.606	380-415/660-690//440-460	1;8;27
		1000//1200	200M/L	**E02212XT3YAX200LF3-W**	**$10,720**	XD	695	1	42	92.2	32.323	380-415/660-690//440-460	1;8;27
40	30	3000//3600	200M/L	**E03036XT3YAX200LF3-W**	**$9,971**	XD	646	1	53.9	93.3	32.323	380-415/660-690//440-460	1;8;27
		1500//1800	200M/L	**E03018XT3YAX200LF3-W**	**$9,850**	XD	695	1	56.4	93.6	32.323	380-415/660-690//440-460	1;8;27
		1000//1200	225S/M	**E03012XT3YAX225SMF3W**	**$14,618**	XD	1138	1	54.7	93	37.441	380-415/660-690//440-460	1;8;27
50	37	3000//3600	200M/L	**E03736XT3YAX200LF3-W**	**$12,218**	XD	670	1	67	93.7	32.323	380-415/660-690//440-460	1;8;27
		1500//1800	225S/M	**E03718XT3YAX225SMF3W**	**$12,542**	XD	1087	1	66	93.9	37.441	380-415/660-690//440-460	1;8;27
		1000//1200	250S/M	**E03712XT3YAX250SMF3W**	**$17,149**	XD	1363	1	65.5	93.5	39.724	380-415/660-690//440-460	1;8;27
60	45	3000//3600	225S/M	**E04536XT3YAX225SMF3W**	**$19,498**	XD	1105	1	76.4	94.2	36.26	380-415/660-690//440-460	1;8;27
		1500//1800	225S/M	**E04518XT3YAX225SMF3W**	**$14,516**	XD	1153	1	80.9	94.4	37.441	380-415/660-690//440-460	1;8;27
		1000//1200	280S/M	**E04512XT3YAX280SMF3W**	**$24,345**	XD	1910	1	82.2	94	44.705	380-415/660-690//440-460	1;8;27

continued on next page

Please refer to inside back cover for description of "NOTES"

For detailed specifications, data sheets, drawings and performance curves visit http:// www.weg.net

THREE -PHASE

TEFC – Ex db - IE3 - *continued*

HP	kW	RPM	Frame	Catalog Number	List Price	Mult. Symbol	Approx. Shipping Weight (lbs)	Service Factor	FL Amps @ High	FL. Eff (%)	"C" Dimension (in)	Voltage (V)	Notes
75	55	3000//3600	250S/M	**E05536XT3YAX250SMF3W**	**$24,417**	XD	1270	1	95.4	94.4	39.724	380-415/660-690//440-460	1;8;27
		1500//1800	250S/M	**E05518XT3YAX250SMF3W**	**$21,508**	XD	1380	1	97.5	94.6	39.724	380-415/660-690//440-460	1;8;27
		1000//1200	280S/M	**E05512XT3YAX280SMF3W**	**$30,872**	XD	2007	1	100	94.3	44.705	380-415/660-690//440-460	1;8;27
100	75	3000//3600	280S/M	**E07536XT3YAX280SMF3W**	**$34,180**	XD	1910	1	126	94.9	44.705	380-415/660-690//440-460	1;8;27
		1500//1800	280S/M	**E07518XT3YAX280SMF3W**	**$27,104**	XD	2040	1	134	95.2	44.705	380-415/660-690//440-460	1;8;27
		1000//1200	315S/M	**E07512XT3YAX315SMF3W**	**$35,180**	XD	2518	1	137	95	51.654	380-415/660-690//440-460	1;8;27
125	90	3000//3600	280S/M	**E09036XT3YAX280SMF3W**	**$40,751**	XD	2040	1	149	95.2	44.705	380-415/660-690//440-460	1;8;27
		1500//1800	280S/M	**E09018XT3YAX280SMF3W**	**$37,526**	XD	2137	1	158	95.4	44.705	380-415/660-690//440-460	1;8;27
		1000//1200	315S/M	**E09012XT3YAX315SMF3W**	**$45,340**	XD	2743	1	162	95.2	51.654	380-415/660-690//440-460	1;8;27
150	110	3000//3600	315S/M	**E11036XT3YAX315SMF3W**	**$48,322**	XD	2443	1	187	95.4	50.472	380-415/660-690//440-460	1;8;27
		1500//1800	315S/M	**E11018XT3YAX315SMF3W**	**$42,766**	XD	2593	1	189	95.5	51.654	380-415/660-690//440-460	1;8;27
		1000//1200	315S/M	**E11012XT3YAX315SMF3W**	**$54,984**	XD	2893	1	196	95.1	51.654	380-415/660-690//440-460	1;8;27
175	132	3000//3600	315S/M	**E13236XT3YAX315SMF3W**	**$61,092**	XD	2593	1	218	95.6	50.472	380-415/660-690//440-460	1;8;27
		1500//1800	315S/M	**E13218XT3YAX315SMF3W**	**$51,911**	XD	2781	1	226	95.6	51.654	380-415/660-690//440-460	1;8;27
		1000//1200	315S/M	**E13212XT3YAX315SMF3W**	**$93,051**	XD	3118	1	240	95.6	51.654	380-415/660-690//440-460	1;8;27
220	160	3000//3600	315S/M	**E16036XT3YAX315SMF3W**	**$76,056**	XD	2743	1	264	95.8	50.472	380-415/660-690//440-460	1;8;27
		1500//1800	315S/M	**E16018XT3YAX315SMF3W**	**$56,646**	XD	2968	1	273	95.8	51.654	380-415/660-690//440-460	1;8;27
		1000//1200	315L	**E16012XT3YAX315LF3-W**	**$101,880**	XD	3473	1	287	95.8	55.984	380-415/660-690//440-460	1;8;27
270	200	3000//3600	315L	**E20036XT3YAX315LF3-W**	**$114,087**	XD	3058	1	326	95.8	54.803	380-415/660-690//440-460	1;8;27
		1500//1800	315L	**E20018XT3YAX315LF3-W**	**$91,423**	XD	3303	1	333	96.1	55.984	380-415/660-690//440-460	1;8;27
		1000//1200	355M/L	**E20012XT3YAX355MLF3W**	**$124,447**	XD	4567	1	367	95.9	61.358	380-415/660-690//440-460	1;8;27
340	250	3000//3600	315L	**E25036XT3YAX315LF3-W**	**$125,854**	XD	3477	1	398	96	54.803	380-415/660-690//440-460	1;8;27
		1500//1800	315L	**E25018XT3YAX315LF3-W**	**$107,240**	XD	3616	1	424	96.4	55.984	380-415/660-690//440-460	1;8;27
		1000//1200	355M/L	**E25012XT3YAX355MLF3W**	**$150,638**	XD	5263	1	464	96	61.358	380-415/660-690//440-460	1;8;27
430	315	1500//1800	355M/L	**E31518XT3YAX355MLF3W**	**$122,650**	XD	4939	1	543	96	61.358	380-415/660-690//440-460	1;8;27

Please refer to inside back cover for description of "NOTES"

For detailed specifications, data sheets, drawings and performance curves visit http:// www.weg.net

Data subject to change without notice.

HYDRODUTY® - STAINLESS STEEL

TEFC - Three-Phase – C-Face Foot Mount. A-144
TENV - Three-Phase – C-Face Foot Mount A-144
TEFC – Three-Phase C-Face Footless A-145
TENV – Three-Phase C-Face Footless A-145
C-Face Foot Mount Drive Match CFW500 Washdown Drive A-146
C-Face Footless Drive Match CFW500 Washdown Drive A-147

PICKERPLUS™ - WHITE EPOXY

TEFC – Three-Phase – C-Face Foot Mount A-148
TEFC – Three-Phase C-Face Footless A-148

SHARK® - STAINLESS STEEL

TEFC / TENV – Three-Phase - C-Face Foot Mount A-149
TEFC / TENV – Three-Phase C-Face Footless. A-150
C-Face Foot Mount Drive Match CFW500 Washdown Drive A-151
C-Face Footless Drive Match CFW500 Washdown Drive A-152

HYDROWASH® - WHITE EPOXY

TEFC / /TENV – Three-Phase – C-Face Foot Mount A-155
TEFC & TENV – Three-Phase C-Face Footless A-156
JM - White Epoxy - TEFC - C-Face, Foot Mount, IP56 . . . . . A-157
TEFC – Three-Phase C-Face Rigid Base A-158
C-Face Foot Mount Drive Match CFW500 Washdown Drive A-159
C-Face Footless Drive Match CFW500 Washdown Drive A-160
C-Face Rigid Base Drive Match CFW500 Washdown Drive A-160

WASHDOWN DUTY VARIABLE FREQUENCY DRIVE

CFW500 – N4X/IP66 w/o Disconnect Switch. A-162
CFW500 – N4X/IP66 w/ Disconnect Switch. A-163
CFW500 Options and Accessories. A-164
CFW500 Technical Data A-165

Hydroduty®

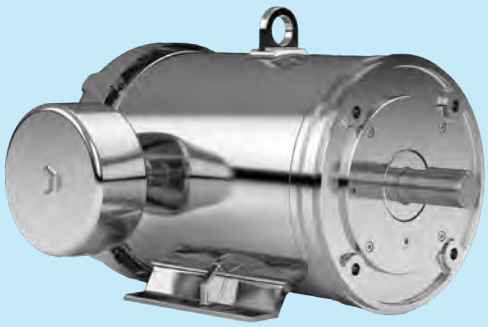

Our Ultimate Washdown Motor

- This is our ultimate stainless steel waterproof motor. It has been proven to provide 75% more cycles than other brands through extreme environment testing.
- Significantly reduces motor replacement and downtime costs
- Meets NEMA MG1 Part 31 for InverterDuty operation; 10:1 CT; 10:1 VT

EZ-Connect Technology
Available on 56/140T frames

Performance Specifications
- 1/2 to 10 hp, 860, 1140, 1725 or 3450 RPM
- TENV or TEFC enclosures
- NEMA Frames 56C - 215TC
- Metric Frame 80-B5 and 100L
- Meets IP69K enclosure protection

PickerPlus™

Severe Duty Feather Picker Motor

- Withstands frequent sanitizing with high pressure sprays and caustic fluids.
- Designed to withstand extreme side loading requirements

Performance Specifications
- 3 hp, 1725 RPM
- TEFC enclosure
- 145TC NEMA or 100L Metric Frames
- Footless or Base Mounted
- C-Face
- Meets IP69K enclosure protection

General Purpose Washdown Motors

Shark®

Stainless Steel Washdown Motor

For use in food processing, pharmaceutical and other applications requiring extreme cleanliness.
- Insulation Class: F (Class H available under request).
- Efficiency: NEMA Premium @ 60hz and IE3 for 50hz.
- Degree of protection: IP66

- Enclosures: TEFC and TENV
- 0.33 to 30 HP
- 1200 to 3600 RPM
- Frames 56C to 286TC
- Internal Tropicalization

HydroWash®

White Painted Washdown Motor

- Designed for long service life in general purpose washdown applications
- It provides extended service life that can reduce your downtime costs for motor replacement
- Meets NEMA MG1 Part 31 for Inverter Duty operation; 6:1 CT; 10:1 VT

Performance Specifications
- 1/2 to 25hp
- TENV or TEFC enclosures
- NEMA Frames 56C - 256TC
- Footless or Base Mounted
- Meets IP56 enclosure protection

Cross other manufacturer's models to WEG equivalents

Data subject to change without notice.

HydroDuty®

New features that make it easier to clean.

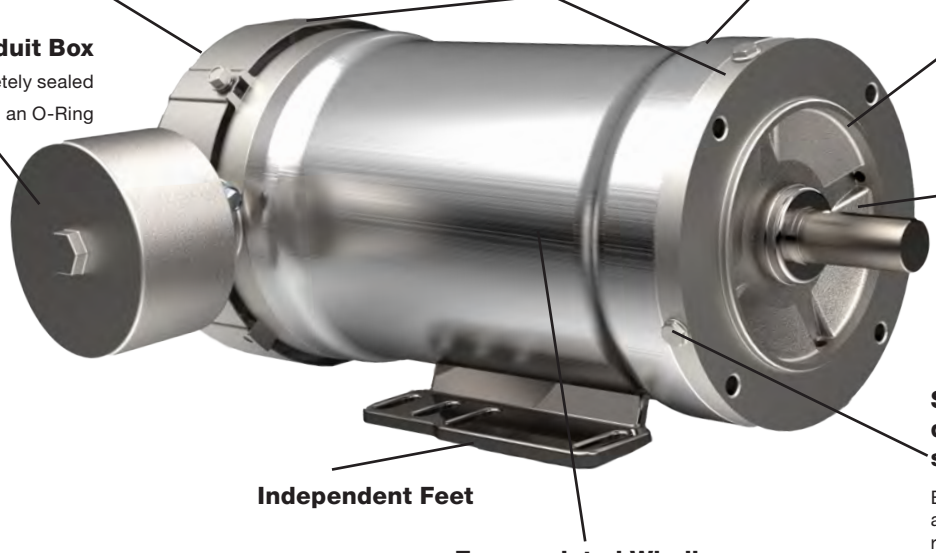

Breather Vent
Prevents oil and water contamination

Sealed Conduit Box
Completely sealed with an O-Ring

O-Rings on both Endshields
Prevents water ingress from high pressure spray

Frame and Construction HydroDuty®
Premium stainless steel for maximum corosion resistance

Patented Three Stage Sealing System
Ensures watertight fit, composed of custom lip seal, stainless steel shaft slinger and severe duty

Double Sealed Ball Bearings
Provide long service life. Drip grooves keep condensation away from bearings

Strategically located drains with stainless steel screws.
Eliminates water accumulation by simply removing the stainless screw that is at the lowest point of the C-face

Independent Feet

Encapsulated Windings
Premium, Patented SprayGuard™ Encapsulated Windings for Optimum Service Lifea. NEMA MG1 Inverter Duty

Longer Life Span

HydroDuty® General features

- Available from 0.5HP up to 10 HP
- TENV or TEFC enclosures
- NEMA Frames 56C, 143/5TC, 182/4TC and 213/5TC
- Independent Feet
- Construction Safe for Food, Beverage and Pharmaceutical
- InverterDuty operation
- Protection Degree IP69K
- Internal Aegis Shaft Grounding ring available as factory build
- Voltage: 230/460/ @60hz 190/380V @50hz
- NEMA Premium design and IE3 compliant for 50hz
- Made in the US
- Colored Leads
- EZ connect available for 56C and 143/5TC
- Improved Welding Finish

** Patent Pending*

Please refer to inside back cover for description of "NOTES"

For detailed specifications, data sheets, drawings and performance curves visit http:// www.weg.net

Encapsulated Wash Down Duty

THREE -PHASE

HydroDuty® - Stainless Steel - TEFC - C-Face - Foot Mount

HP	kW	RPM	Frame	Model Number	List Price	Mult. Symbol	Approx. Shipping Weight (lbs)	Service Factor	FL Amps @ High	FL. Eff (%)	"C" Dimension Standard/ EZ Model	Voltage (V)	Notes
0.50	0.37	1800	56C	.5018ET3EHD56C	$1,450	S3	43	1.00	1.02	73.5	13.88	230/460	1
		1200	56C	.5012ET3EHD56C	$1,694	S3	44	1.15	1.35	66	13.88	230/460	
0.75	0.55	1800	56C	.7518ET3EHD56C	$1,544	S3	43	1.15	1.47	75.5	13.88	230/460	
		900	56C	.7509ET3EHD56C	$1,794	S3	59	1.00	2.35	70	15.63	230/460	1
1	0.75	3600	56C	00136ET3EHD56C	$1,601	S3	43	1.15	1.57	77.0	13.88	230/460	
		1800	56C	00118ET3EHD56C	$1,619	S3	54	1.15	1.55	85.5	15.63	230/460	
		1800	143TC	00118ET3EHD143TC	$1,642	S3	55	1.15	1.55	85.5	15.69	230/460	
		1800	56C	00118ET3HHD56C	$1,630	S3	53	1.15	1.28	85.5	15.63	575	
		1200	56C	00152ET3EHD56C	$1,875	S3	53	1.15	1.78	82.5	14.63	230/460	
		1200	145TC	00112ET3EHD143TC	$1,886	S3	53	1.15	1.78	82.5	14.69	230/460	
1.5	1.1	3600	56C	00156ET3EHD56C	$1,658	S3	50	1.15	1.96	84.0	14.63	230/460	
		1800	145TC	00158ET3EHD145TC	$1,706	S3	56	1.15	2.13	86.5	15.69	230/460	
		1800	56C	00158ET3EHD56C	$1,683	S3	56	1.15	2.13	86.5	15.63	230/460	
2	1.5	3600	145TC	00236ET3EHD145TC	$1,976	S3	53	1.15	2.59	85.5	14.69	230/460	
		3600	145TC	00236ET3HHD145TC	$1,981	S3	52	1.15	2.07	85.5	14.69	575	
		3600	56C	00236ET3EHD56C	$1,958	S3	53	1.15	2.59	85.5	14.63	230/460	
		1800	145TC	00218ET3EHD143TC	$2,005	S3	56	1.15	2.94	86.5	15.69	230/460	
		1800	145TC	00218ET3HHD145TC	$2,025	S3	58	1.15	2.32	86.5	15.69	575	
		1800	56C	00218ET3EHD56C	$1,981	S3	56	1.15	2.94	86.5	15.63	230/460	
		1800	56C	00218ET3HHD56C	$1,995	S3	58	1.15	2.32	86.5	15.63	575	
3	2.2	3600	145TC	00318ET3EHD143TC	$2,300	S3	61	1.15	3.63	86.5	15.69	230/460	
		3600	56C	00336ET3EHD56C	$2,290	S3	61	1.15	3.63	86.5	15.63	230/460	
		3600	182TC	00336ET3EHD182TC	$2,915	S3	90	1.15	3.8	86.5	15.78	230/460	45
		1800	182TC	00318ET3EHD182TC	$2,875	S3	85	1.15	3.9	89.5	15.78	230/460	45
5	3.7	3600	184TC	00536ET3EHD184TC	$3,500	S3	103	1.15	6.2	88.5	15.78	230/460	45
		1800	184TC	00518ET3EHD184TC	$3,305	S3	160	1.15	6.3	89.5	15.78	230/460	45
7.5	5.5	3600	215TC	00736ET3EHD213TC	$4,151	S3	203	1.15	9.3	89.5	19.18	230/460	45
		1800	213TC	00718ET3EHD213TC	$4,280	S3	173	1.15	9.6	91.7	19.18	230/460	45
10	7.5	3600	215TC	01036ET3EHD215TC	$4,693	S3	213	1.15	11.8	90.2	19.18	230/460	45
		1800	215TC	01018ET3EHD215TC	$4,968	S3	205	1.15	13.2	91.7	19.18	230/460	45

HydroDuty® - Stainless Steel - TENV - C-Face - Foot Mount

HP	kW	RPM	Frame	EZ Connect Model Number	List Price	Mult. Symbol	Approx. Shipping Weight (lbs)	Service Factor	FL Amps @ High	FL. Eff (%)	"C" Dimension Standard/ EZ Model	Voltage (V)	Notes
0.5	0.37	3600	56C	.5036NT3EHD56C	$1,435	S3	38	1.00	0.8	79.0	12.91	230/460	1
		1800	56C	.5018NT3EHD56C	$1,455	S3	40	1.00	0.86	80.0	12.91	230/460	1
0.75	0.55	3600	56C	.7536NT3EHD56C	$1,460	S3	41	1.15	1.12	81.0	12.91	230/460	
		1800	56C	.7518NT3EHD56C	$1,483	S3	44	1.00	1.25	82.5	12.91	230/460	1
		1200	56C	.7512NT3EHD56C	$1,795	S3	49	1.00	1.66	77	13.66	230/460	1
1	1.75	3600	56C	00136NT3HHD56C	$1,635	S3	44	1.00	1.12	86.0	13.66	575	1
		3600	56C	00136NT3EHD56C	$1,630	S3	42	1.15	1.38	85.0	13.66	230/460	
		1800	143TC	00118NT3EHD143TC	$1,615	S3	54	1.00	1.55	85.5	14.72	230/460	1
		1800	56C	00118NT3EHD56C	$1,591	S3	53	1.00	1.55	85.5	14.66	230/460	1
		1800	56C	00118NT3EHDLT56C	$1,696	S3	54	1.00	1.55	85.5	14.66	230/460	1
		1800	56C	00118NT3HHD56C	$1,610	S3	51	1.00	1.24	85.5	13.66	575	1

***Low temperature ratings*

All ratings are 208-230/460; 40° C ambient; Class F insulation

56 and 145 Frame models also rated 230/460, 50HZ, 1.0SF

[1] Regular terminal box

[2] EZ-Connect model is 56C frame.

Find the Right Drive for your HydroDuty® Motor on page 146

For detailed specifications, data sheets, drawings and performance curves visit http:// www.weg.net

Data subject to change without notice.

HydroDuty® - Stainless Steel - TEFC - C-Face - Footless

HP	kW	RPM	Frame	EZ Connect Model Number	List Price	Mult. Symbol	Approx. Shipping Weight (lbs)	Service Factor	FL Amps @ High	FL. Eff (%)	"C" Dimension Standard/ EZ Model	Voltage (V)	Notes
0.75	0.55	1800	56C	.7518ET3EHD56CFL	**$1,526**	S3	42	1.15	1.47	75.5	13.88	230/460	20
1	0.75	3600	56C	00136ET3EHD56CFL	**$1,581**	S3	42	1.15	1.57	77.0	13.88	230/460	20
		1800	143TC	00118ET3EHDR143TC	**$1,626**	S3	53	1.15	1.55	85.5	15.69	230/460	20
		1800	56C	00118ET3EHD56CFL	**$1,601**	S3	52	1.15	1.55	85.5	15.63	230/460	20
1.5	1.1	1800	145TC	00158ET3EHDR145TC	**$1,688**	S3	55	1.15	2.13	86.5	15.69	230/460	20
		1800	56C	00158ET3EHD56CFL	**$1,663**	S3	55	1.15	2.13	86.5	15.63	230/460	20
2	1.5	1800	145TC	00218ET3EHDR143TC	**$1,985**	S3	55	1.15	2.94	86.5	15.69	230/460	20
		1800	56C	00218ET3EHD56CFL	**$1,962**	S3	55	1.15	2.94	86.5	15.63	230/460	20
3	2.2	1800	184TC	00318ET3EHDR184TC	**$2,805**	S3	112	1.15	4.3	89.5	17.2	230/460	20
5	3.7	1800	184TC	00518ET3EHDR184TC	**$3,295**	S3	120	1.00	6.7	89.5	17.2	230/460	1;20

HydroDuty® - Stainless Steel - TENV - C-Face - Footless

HP	kW	RPM	Frame	EZ Connect Model Number	List Price	Mult. Symbol	Approx. Shipping Weight (lbs)	Service Factor	FL Amps @ High	FL. Eff (%)	"C" Dimension Standard/ EZ Model	Voltage (V)	Notes
0.5	0.37	1800	56C	.5018NT3EHD56CFL	**$1,421**	S3	39	1.00	0.86	80.0	12.91	230/460	1;20
0.75	0.55	3600	56C	.7536NT3EHD56CFL	**$1,443**	S3	40	1.15	1.12	81.0	12.91	230/460	20
		1800	56C	.7518NT3EHD56CFL	**$1,465**	S3	43	1.00	1.25	82.5	12.91	230/460	1;20
1	0.75	1800	56C	00118NT3EHD56CFL	$1,572	S3	52	1.00	1.55	85.5	14.68	230/460	1;20
		1800	143TC	00118NT3EHDR143TC	$1,595	S3	52	1.00	1.55	85.5	14.72	230/460	1;20
		1800	56C	00118NT3EHDLT56CFL	$1,676	S3	52	1.00	1.55	85.5	14.66	230/460	1;20
		1800	100L	00118NT3EHDR100L	$1,891	S3	53	1.00	1.55	85.5	14.94	230/460	1;20
		1200	56C	00112ET3EHD56CFL	$1,900	S3	59	1.00	2	82.5	14.66	230/460	1;20

All ratings are 208-230/460 40° C ambient Class F insulation

56 and 145 Frame models also rated 230/460, 50HZ, 1.0SF

[1] Regular terminal box

Find the Right Drive for your HydroDuty® Motor on page 147

EZ-Connect Technology

Available on 56/140T frames

1. Ensure leads are connected for appropriate voltage per nameplate. Attach green ground lead to provided screw terminal.

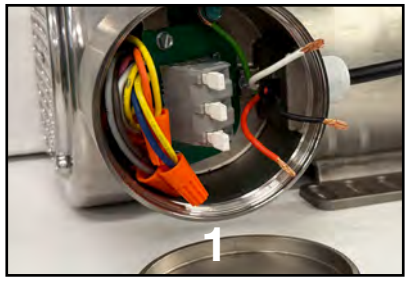

2. Feed incoming leads into appropriate termination (L1, L2, L3).

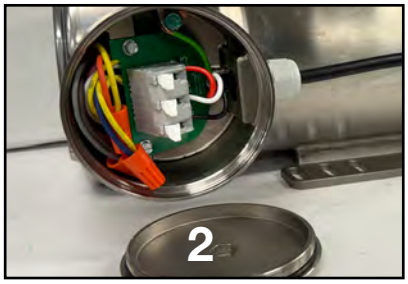

3. Close Terminal Levers and tighten waterproof cable gland or conduit connection.

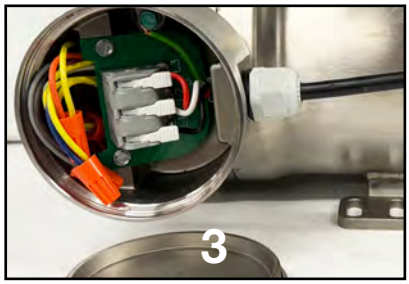

Please refer to inside back cover for description of "NOTES"

For detailed specifications, data sheets, drawings and performance curves visit http:// www.weg.net

Encapsulated Wash Down Duty

THREE -PHASE

HydroDuty® Motor and CFW500 Washdown Drive Quick Selection Quide

HydroDuty® - Stainless Steel - TEFC - C-Face - Foot Mount

HP	RPM	Voltage (V)	Model Number	Motor List Price	FL Eff. (%)	460V Drive [1]	Drive List Price	230V Drive [1]	Drive List Price
0.50	1800	230/460	.5018ET3EHD56C	$1,450	73.5	CFW500A02P6B2DB66G2	$800	CFW500A01P6T4DB66G2	$975
0.50	1200	230/460	.5012ET3EHD56C	$1,694	66.0	CFW500A04P3B2DB66G2	$850	CFW500A01P6T4DB66G2	$975
0.75	1800	230/460	.7518ET3EHD56C	$1,544	75.5	CFW500A04P3B2DB66G2	$850	CFW500A01P6T4DB66G2	$975
	900	230/460	.7509ET3EHD56C	$1,794	70.0	CFW500A07P3B2DB66G2	$1,015	CFW500A02P6T4DB66G2	$990
1	3600	230/460	00136ET3EHD56C	$1,601	77.0	CFW500A04P3B2DB66G2	$850	CFW500A01P6T4DB66G2	$975
	1800	230/460	00118ET3EHD56C	$1,619	85.5	CFW500A04P3B2DB66G2	$850	CFW500A01P6T4DB66G2	$975
	1800	230/460	00118ET3EHD143TC	$1,642	85.5	CFW500A04P3B2DB66G2	$850	CFW500A01P6T4DB66G2	$975
	1800	575	00118ET3HHD56C	$1,630	85.5	CFW500B01P7T5DB66 [2]	$1,590		
	1200	230/460	00152ET3EHD56C	$1,875	82.5	CFW500A04P3B2DB66G2	$850	CFW500A02P6T4DB66G2	$990
	1200	230/460	00112ET3EHD143TC	$1,886	82.5	CFW500A04P3B2DB66G2	$850	CFW500A02P6T4DB66G2	$990
1.5	3600	230/460	00156ET3EHD56C	$1,658	84.0	CFW500A04P3B2DB66G2	$850	CFW500A02P6T4DB66G2	$990
	1800	230/460	00158ET3EHD145TC	$1,706	86.5	CFW500A04P3B2DB66G2	$850	CFW500A02P6T4DB66G2	$990
	1800	230/460	00158ET3EHD56C	$1,683	86.5	CFW500A04P3B2DB66G2	$850	CFW500A02P6T4DB66G2	$990
2	3600	230/460	00236ET3EHD145TC	$1,976	85.5	CFW500A07P3B2DB66G2	$1,015	CFW500A02P6T4DB66G2	$990
	3600	575	00236ET3HHD145TC	$1,981	85.5	CFW500B03P0T5DB66 [2]	$1,670		
	3600	230/460	00236ET3EHD56C	$1,958	85.5	CFW500A07P3B2DB66G2	$1,015	CFW500A02P6T4DB66G2	$990
	1800	230/460	00218ET3EHD143TC	$2,005	86.5	CFW500A07P3B2DB66G2	$1,015	CFW500A04P3T4DB66G2	$1,175
	1800	575	00218ET3HHD145TC	$2,025	86.5	CFW500B03P0T5DB66 [2]	$1,670		
	1800	230/460	00218ET3EHD56C	$1,981	86.5	CFW500A07P3B2DB66G2	$1,015	CFW500A04P3T4DB66G2	$1,175
	1800	575	00218ET3HHD56C	$1,995	86.5	CFW500B03P0T5DB66 [2]	$1,670		
3	3600	230/460	00318ET3EHD143TC	$2,300	86.5	CFW500A07P3B2DB66G2	$1,015	CFW500A04P3T4DB66G2	$1,175
3	3600	230/460	00336ET3EHD56C	$2,290	86.5	CFW500A07P3B2DB66G2	$1,015	CFW500A04P3T4DB66G2	$1,175
3	3600	230/460	00336ET3EHD182TC	$2,915	86.5	CFW500A10P0B2DB66G2	$1,095	CFW500A04P3T4DB66G2	$1,175
3	1800	230/460	00318ET3EHD182TC	$2,875	89.5	CFW500A10P0B2DB66G2	$1,095	CFW500A04P3T4DB66G2	$1,175
5	3600	230/460	00536ET3EHD184TC	$3,500	88.5	CFW500A16P0T2DB66G2	$1,350	CFW500A06P5T4DB66G2	$1,400
5	1800	230/460	00518ET3EHD184TC	$3,305	89.5	CFW500A16P0T2DB66G2	$1,350	CFW500A06P5T4DB66G2	$1,400
7.5	3600	230/460	00736ET3EHD213TC	$4,151	89.5	CFW500B24P0T2DB66G2	$1,950	CFW500A10P0T4DB66G2	$1,650
7.5	1800	230/460	00718ET3EHD213TC	$4,280	91.7	CFW500B24P0T2DB66G2	$1,950	CFW500A10P0T4DB66G2	$1,650
10	3600	230/460	01036ET3EHD215TC	$4,693	90.2	CFW500B24P0T2DB66G2	$1,950	CFW500B14P0T4DB66G2	$2,050
10	1800	230/460	01018ET3EHD215TC	$4,968	91.7	CFW500B33P0T2DB66G2	$2,675	CFW500B14P0T4DB66G2	$2,050

HydroDuty® - Stainless Steel - TENV - C-Face - Foot Mount

HP	RPM	Voltage (V)	EZ Connect Model Number	Motor List Price	FL Eff. (%)	460V Drive [1]	Drive List Price	230V Drive [1]	Drive List Price
0.5	3600	230/460	.5036NT3EHD56C	$1,435	79.0	CFW500A01P6B2DB66G2	$775	CFW500A01P0T4DB66G2	$950
	1800	230/460	.5018NT3EHD56C	$1,455	80.0	CFW500A02P6B2DB66G2	$800	CFW500A01P0T4DB66G2	$950
0.75	3600	230/460	.7536NT3EHD56C	$1,460	81.0	CFW500A02P6B2DB66G2	$800	CFW500A01P6T4DB66G2	$975
	1800	230/460	.7518NT3EHD56C	$1,483	82.5	CFW500A02P6B2DB66G2	$800	CFW500A01P6T4DB66G2	$975
	1200	230/460	.7512NT3EHD56C	$1,795	77.0	CFW500A04P3B2DB66G2	$850	CFW500A02P6T4DB66G2	$990
1	3600	575	00136NT3HHD56C	$1,635	86.0	CFW500B01P7T5DB66 [2]	$1,590		
	3600	230/460	00136NT3EHD56C	$1,630	85.0	CFW500A04P3B2DB66G2	$850	CFW500A01P6T4DB66G2	$975
	1800	230/460	00118NT3EHD143TC	$1,615	85.5	CFW500A04P3B2DB66G2	$850	CFW500A01P6T4DB66G2	$975
	1800	230/460	00118NT3EHD56C	$1,591	85.5	CFW500A04P3B2DB66G2	$850	CFW500A01P6T4DB66G2	$975
	1800	230/460	00118NT3EHDLT56C	$1,696	85.5	CFW500A04P3B2DB66G2	$850	CFW500A01P6T4DB66G2	$975
	1800	575	00118NT3HHD56C	$1,610	85.5	CFW500B01P7T5DB66 [2]	$1,590		

Notes:

1) Drives selected to match motor FLA

2) 575V Drive

Please refer to inside back cover for description of "NOTES"

For detailed specifications, data sheets, drawings and performance curves visit http:// www.weg.net

Data subject to change without notice.

HydroDuty® Motor and CFW500 Washdown Drive Quick Selection Quide

HydroDuty® - Stainless Steel - TEFC - C-Face - Footless

HP	RPM	Voltage (V)	EZ Connect Model Number	Motor List Price	FL Eff.(%)	460V Drive [1]	Drive List Price	230V Drive [1]	Drive List Price
0.75	1800	230/460	.7518ET3EHD56CFL	$1,526	75.5	CFW500A04P3B2DB66G2	$850	CFW500A01P6T4DB66G2	$975
1	3600	230/460	00136ET3EHD56CFL	$1,581	77.0	CFW500A04P3B2DB66G2	$850	CFW500A01P6T4DB66G2	$975
	1800	230/460	00118ET3EHDR143TC	$1,626	85.5	CFW500A04P3B2DB66G2	$850	CFW500A01P6T4DB66G2	$975
	1800	230/460	00118ET3EHD56CFL	$1,601	85.5	CFW500A04P3B2DB66G2	$850	CFW500A01P6T4DB66G2	$975
1.5	1800	230/460	00158ET3EHDR145TC	$1,688	86.5	CFW500A04P3B2DB66G2	$850	CFW500A02P6T4DB66G2	$990
	1800	230/460	00158ET3EHD56CFL	$1,663	86.5	CFW500A04P3B2DB66G2	$850	CFW500A02P6T4DB66G2	$990
2	1800	230/460	00218ET3EHDR143TC	$1,985	86.5	CFW500A07P3B2DB66G2	$1,015	CFW500A04P3T4DB66G2	$1,175
	1800	230/460	00218ET3EHD56CFL	$1,962	86.5	CFW500A07P3B2DB66G2	$1,015	CFW500A04P3T4DB66G2	$1,175
3	1800	230/460	00318ET3EHDR184TC	$2,805	89.5	CFW500A10P0B2DB66G2	$1,095	CFW500A04P3T4DB66G2	$1,175
5	1800	230/460	00518ET3EHDR184TC	$3,295	89.5	CFW500A16P0T2DB66G2	$1,350	CFW500A10P0T4DB66G2	$1,650

HydroDuty® - Stainless Steel - TENV - C-Face - Footless

HP	RPM	Voltage (V)	EZ Connect Model Number	Motor List Price	FL Eff.(%)	460V Drive [1]	Drive List Price	230V Drive [1]	Drive List Price
0.5	1800	230/460	.5018NT3EHD56CFL	$1,421	80.0	CFW500A02P6B2DB66G2	$800	CFW500A01P0T4DB66G2	$950
0.75	3600	230/460	.7536NT3EHD56CFL	$1,443	81.0	CFW500A02P6B2DB66G2	$800	CFW500A01P6T4DB66G2	$975
	1800	230/460	.7518NT3EHD56CFL	$1,465	82.5	CFW500A02P6B2DB66G2	$800	CFW500A01P6T4DB66G2	$975
1	1800	230/460	00118NT3EHD56CFL	$1,572	85.5	CFW500A04P3B2DB66G2	$850	CFW500A01P6T4DB66G2	$975
	1800	230/460	00118NT3EHDR143TC	$1,595	85.5	CFW500A04P3B2DB66G2	$850	CFW500A01P6T4DB66G2	$975
	1800	230/460	00118NT3EHDLT56CFL	$1,676	85.5	CFW500A04P3B2DB66G2	$850	CFW500A01P6T4DB66G2	$975
	1800	230/460	00118NT3EHDR100L	$1,891	85.5	CFW500A04P3B2DB66G2	$850	CFW500A01P6T4DB66G2	$975
	1200	230/460	00112ET3EHD56CFL	$1,900	82.5	CFW500A04P3B2DB66G2	$850	CFW500A02P6T4DB66G2	$990

Notes:

1) Drives selected to match motor FLA

Encapsulated Wash Down Duty

THREE -PHASE

PickerPlus™ - White Epoxy - TEFC - C-Face - Foot Mount

HP	kW	RPM	Frame	Catalog Number	List Price	Mult. Symbol	Approx. Shipping Weight (lbs)	Service Factor	FL Amps @ High	FL. Eff (%)	"C" Dimension (in)	Voltage (V)	Notes
3	2.2	1800	143/5TC	1311017192	$1,736	S3	68	1.00	4.40	81.5	15.560	230/460	1;9
3	2.2	1800	100L	1311017196	$1,852	S3	68	1.00	4.40	81.5	15.780	230/460	1;9

PickerPlus™ - White Epoxy - TEFC - C-Face - Footless

HP	kW	RPM	Frame	Catalog Number	List Price	Mult. Symbol	Approx. Shipping Weight (lbs)	Service Factor	FL Amps @ High	FL. Eff (%)	"C" Dimension (in)	Voltage (V)	Notes
3	2.2	1800	100L-B14	1311017195	$1,803	S3	66	1.00	4.40	81.5	15.780	230/460	1;9;20
3	2.2	1800	100L-B5	1311017191	$1,820	S3	71	1.00	4.40	81.5	16.180	230/460	1;9;20

Shark®

The WEG Shark® Stainless Steel Motor is designed to meet the most demanding sanitary requirements through its hygienic, smooth, and rounded construction, which avoids dirt accumulation and simplifies cleaning. Its special feet design prevents residue buildup and enhances cleaning efficiency. The motor features a robust sealing system that includes a stainless steel slinger, O-rings, seals, and double-sealed bearings to protect against moisture and contaminants. Additionally, the internally painted stator and rotor provide added resistance to corrosion, extending motor life and ensuring maximum reliability in harsh, washdown intensive environments.

Designed for variable frequency drive operation with enhanced wire spike resistance for long-term reliability. Available with Class H insulation for high-temperature endurance and optional shaft grounding ring to protect bearings.

Standard Features

- Output: 0.33 HP to 20 HP
- Frames: 56C up to 254/6TC
- Number of poles: 2 up to 6
- Certifications: CSA/UL/CE
- Efficiency: NEMA Premium @ 60hz and IE3 for 50hz
- Frequency: TEFC ratings are rated for 60/50hz while TENV is 60hz only
- Voltage: 230/460//190-220/380-415
- Service Factor: 1.15
- Mounting: F1 (Footless and Foot Mount)
- Flange: C-Face
- Enclosures: TEFC and TENV
- Insulation Class: F (Class H available under request)
- Degree of protection: IP66
- Duty: Continuous
- Shaft: Stainless Steel 300 Series
- Impregnated and epoxy painted winding (non-encapsulated)

Unique Standard Features

- T-box can rotate in 90 degrees increments
- Welded Terminal Box
- Independent Feet
- Four plugs in each plate
- O'rings in end shields
- Made in North America
- Polished stainless steel finish
- Colored Leads
- Water tight cable gland included
- Suitable for inverter use per NEMA MG1 Part 31.4.4.2
- Lifting provisions 182/4TC - 254/6TC frame

Optional

- SGR shaft grounding ring
- Class H
- 25hp and 30hp models available in frame 280
- Kit with 2 T-drains

Note: 50/60hz on TEFC only

Please refer to inside back cover for description of "NOTES"

For detailed specifications, data sheets, drawings and performance curves visit http:// www.weg.net

Data subject to change without notice.

Shark®

Find the **Right Drive** for your **Shark®** Motor on page 151

Shark®-StainlessSteel-TEFC&TENV-C-Face-FootMount

HP	kW	RPM	Frame	CatalogNumber	List Price	Mult. Symbol	Approx. Shipping-Weight(lbs)	Enclosure	Service Factor	FLAmps@ High	FL.Eff(%)	"C" Dimension (in)	Voltage(V)	Notes
0.33	0.25	3600	56C	.3336NP3ESS56C-S	$725	S1	28.28	TENV	1.15	0.58	72	10.886	230/460	17; 21
		1800	56C	.3318NP3ESS56C-S	$726	S1	30.34	TENV	1.15	0.744	74	10.886	230/460	17; 21
0.5	0.37	1200	56C	.5012NP3ESS56C-S	$819	S1	38.65	TENV	1.15	0.976	75.5	11.28	230/460	17; 21
		1800	56C	.5018NP3ESS56C-S	$753	S1	34.56	TENV	1.15	0.986	78.5	10.886	260/460	17; 21
		3600	56C	.5036NP3ESS56C-S	$719	S1	29.77	TENV	1.15	0.765	74	10.886	230/460	17; 21
0.75	0.55	1200	56C	.7512NP3ESS56C-S	$921	S1	42.7	TENV	1.15	1.3	81.5	11.28	230/460	17; 21
		1800	56C	.7518NP3ESS56C-S	$865	S1	37.36	TENV	1.15	1.3	81.5	10.886	230/460	17; 21
		3600	56C	.7536NP3ESS56C-S	$746	S1	32.48	TENV	1.15	1.13	77	10.886	230/460	17; 21
1	0.75	1800	143TC	00118ET3ESS143TC-S	$1,117	S1	49.19	TEFC	1.15	1.47	85.5	13.925	230/460	21
		1200	143TC	00112ET3ESS145TC-S	$1,182	S1	49.76	TEFC	1.15	1.58	82.5	13.925	230/460	21
		1800	143TC	00118NT3ESS143TC-S	$1,100	S1	48.32	TENV	1.15	1.47	85.5	12.134	230/460	17; 21
		1800	56C	00118ET3ESS56C-S	$1,055	S1	45.96	TEFC	1.15	1.47	85.5	13.858	230/460	21
		1200	56C	00112ET3ESS56C-S	$1,135	S1	46.99	TEFC	1.15	1.58	82.5	13.465	230/460	21
		3600	56C	00136ET3HSS56C-S	$956	S1	34.5	TEFC	1.15	1.15	78.5	13.465	575	21
		3600	56C	00136ET3ESS56C-S	$944	S1	34.69	TEFC	1.15	1.44	78.5	13.465	230/460	21
		1800	56C	00118NT3ESS56C-S	$1,000	S1	47.32	TENV	1.15	1.47	85.5	12.067	230/460	17; 21
		3600	56C	00136NT3ESS56C-S	$968	S1	39.19	TENV	1.15	1.42	77	11.673	230/460	17; 21
		3600	56C	00136NT3HSS56C-S	$972	S1	39.01	TENV	1.15	1.14	77	11.673	575	17; 21
		1800	56C	00118NT3HSS56C-S	$936	S1	47.12	TENV	1.15	1.18	85.5	12.067	575	17; 21
1.5	1.1	1800	143TC	00158ET3ESS145TC-S	$1,172	S1	49.43	TEFC	1.15	2.02	86.5	13.925	230/460	21
		1800	56C	00158ET3ESS56C-S	$1,114	S1	48.37	TEFC	1.15	2.02	86.5	13.858	230/460	21
		3600	56C	00156ET3ESS56C-S	$1,097	S1	42.79	TEFC	1.15	1.87	84	13.465	230/460	21
2	1.5	1800	145TC	00218ET3ESS145TC-S	$1,391	S1	53.87	TEFC	1.15	2.72	86.5	13.925	230/460	21
		3600	145TC	00236ET3ESS145TC-S	$1,354	S1	51.07	TEFC	1.15	2.47	85.5	13.925	230/460	21
		3600	56C	00236ET3ESS56C-S	$1,238	S1	50.2	TEFC	1.15	2.47	85.5	13.858	230/460	21
		1800	56C	00218ET3ESS56C-S	$1,249	S1	52.66	TEFC	1.15	2.72	86.5	13.858	230/460	21
		1800	56C	00218ET3HSS56C-S	$1,241	S1	52.622	TEFC	1.15	2.18	86.5	13.858	575	21
		3600	56C	00236ET3HSS56C-S	$1,215	S1	50.05	TEFC	1.15	1.98	85.5	13.858	575	21
3	2.2	3600	182TC	00336ET3HSS182TC-S	$2,140	S1	72.39	TEFC	1.15	3.01	86.5	15.512	575	21
		1800	182TC	00318ET3HSS182TC-S	$2,080	S1	96.58	TEFC	1.15	3.05	89.5	17.878	575	21
		1800	182TC	00318ET3ESS182TC-S	$2,076	S1	96.66	TEFC	1.15	3.81	89.5	17.878	230/460	21
		3600	182TC	00336ET3ESS182TC-S	$2,114	S1	72.33	TEFC	1.15	3.76	86.5	15.512	230/460	21
5	3.7	1800	184TC	00518ET3ESS184TC-S	$2,366	S1	100.84	TEFC	1.15	6.49	89.5	17.878	230/460	21
		3600	184TC	00536ET3ESS184TC-S	$2,438	S1	89.14	TEFC	1.15	5.9	88.5	16.697	230/460	21
		3600	184TC	00536ET3HSS184TC-S	$2,438	S1	88.91	TEFC	1.15	4.75	88.5	16.697	575	21
		1800	184TC	00518ET3HSS184TC-S	$2,366	S1	100.64	TEFC	1.15	5.19	89.5	17.878	575	21
7.5	5.5	1800	213TC	00718ET3ESS213TC-S	$3,425	S1	163.57	TEFC	1.15	8.96	91.7	20.079	230/460	21
		3600	213TC	00736ET3ESS213TC-S	$3,582	S1	136.09	TEFC	1.15	8.87	89.5	19.291	230/460	21
		3600	213TC	00736ET3HSS213TC-S	$3,584	S1	135.83	TEFC	1.15	7.1	89.5	19.291	575	21
		1800	213TC	00718ET3HSS213TC-S	$3,430	S1	162.8	TEFC	1.15	7.17	91.7	20.079	575	21
10	7.5	3600	213TC	01036ET3ESS213TC-S	$3,837	S1	154.63	TEFC	1.15	11.9	90.2	20.079	230/460	21
		1800	213TC	01018ET3ESS213TC-S	$3,693	S1	180.16	TEFC	1.15	12.1	91.7	21.654	230/460	21
		1800	213TC	01018ET3HSS213TC-S	$3,698	S1	179.58	TEFC	1.15	9.66	91.7	21.654	575	21
15	11	1800	254TC	01518ET3ESS254TC-S	$6,344	S1	258.19	TEFC	1.15	18.2	92.4	23.378	230/460	21
		3600	254TC	01536ET3ESS254TC-S	$6,355	S1	233.29	TEFC	1.15	17.4	91	23.378	230/460	21
		3600	213TC	01536ET3ESS215TC-S	$5,665	S1	154	TEFC	1.15	17	91	21.654	230/460	21
20	15	1800	256TC	02018ET3ESS256TC-S	$6,975	S1	286.36	TEFC	1.15	24.7	93	23.378	230/460	21
		3600	256TC	02036ET3ESS256TC-S	$7,050	S1	261.03	TEFC	1.15	22.7	91	23.378	230/460	21
25	19	1800	284TC	02518ET3ESS284TC	$7,905	S1	390	TEFC	1	29.08	93.6	26.8	230/460	21
		3600	284TSC	02536ET3ESS284TC	$8,435	S1	370	TEFC	1	28.68	91.7	26.8	230/460	21
		3600	256TC	02536ET3ESS256TC-S	$7,877	S1	220	TEFC	1.15	28.5	91.7	23.378	230/460	21
30	22	1800	286TC	03018ET3ESS286TC	$8,364	S1	417	TEFC	1	34.9	93.6	27.8	230/460	21
		3600	286TSC	03036ET3ESS286TC	$8,816	S1	410	TEFC	1	34.42	34.42	27.8	230/460	21

Please refer to inside back cover for description of "NOTES"

For detailed specifications, data sheets, drawings and performance curves visit http://www.weg.net

THREE -PHASE

Shark®

Find the **Best Drive** for your **Shark®** Motor on page 152

Shark® - Stainless Steel - TEFC & TENV - C-Face - Footless

HP	kW	RPM	Frame	Catalog Number	List Price	Mult. Symbol	Enclosure	Approx. Shipping Weight (lbs)	Service Factor	FL Amps @ High	FL. Eff (%)	"C" Dimension (in)	Voltage (V)	Notes
0.33	0.25	1800	56C	.3318NP3ESS56CFL-S	$718	S1	30.18	TENV	1.15	0.744	74.0	10.886	230/460	17; 21
0.5	0.37	1200	56C	.5012NP3ESS56CFL-S	$814	S1	38.5	TENV	1.15	0.976	75.5	11.28	230/460	17; 21
		1800	56C	.5018NP3ESS56CFL-S	$738	S1	34.4	TENV	1.15	0.986	78.5	10.886	230/460	17; 21
		3600	56C	.5036NP3ESS56CFL-S	$712	S1	29.61	TENV	1.15	0.765	74.0	10.886	230/460	17; 21
0.75	0.55	1800	56C	.7518NP3ESS56CFL-S	$842	S1	37.2	TENV	1.15	1.3	81.5	10.886	230/460	17; 21
		1200	56C	.7512NP3ESS56CFL-S	$922	S1	45.55	TENV	1.15	1.3	81.5	11.28	230/460	17; 21
		3600	56C	.7536NP3ESS56CFL-S	$741	S1	32.32	TENV	1.15	1.13	77.0	10.886	230/460	17; 21
1	0.75	1800	143TC	00118ET3ESSR143TC-S	$1,108	S1	48.66	TEFC	1.15	1.47	85.5	13.925	230/460	21
		1800	143TC	00118NT3ESSR143TC-S	$1,092	S1	47.79	TENV	1.15	1.47	85.5	12.134	230/460	17; 21
		1800	56C	00118ET3ESS56CFL-S	$1,049	S1	47.211	TEFC	1.15	1.47	85.5	13.858	230/460	21
		3600	56C	00136ET3ESS56CFL-S	$937	S1	33.55	TEFC	1.15	1.44	78.5	13.465	230/460	21
		3600	56C	00136NT3ESS56CFL-S	$958	S1	38.22	TENV	1.15	1.42	77.0	11.673	230/460	17; 21
		1800	56C	00118NT3ESS56CFL-S	$933	S1	46.35	TENV	1.15	1.47	85.5	12.067	230/460	17; 21
		1800	56C	00118NT3HSS56CFL-S	$942	S1	45.15	TENV	1.15	1.18	85.5	12.067	575	17; 21
1.5	1.1	3600	143TC	00156ET3ESSR143TC-S	$1,186	S1	45.28	TEFC	1.15	1.87	84.0	13.925	230/460	21
		1800	145TC	00158ET3ESSR145TC-S	$1,132	S1	48.9	TEFC	1.15	2.02	86.5	13.925	230/460	21
		1800	56C	00158ET3HSS56CFL-S	$1,106	S1	47.14	TEFC	1.15	1.62	86.5	13.858	575	21
		1800	56C	00158ET3ESS56CFL-S	$1,097	S1	47.39	TEFC	1.15	2.02	86.5	13.858	230/460	21
		3600	56C	00156ET3ESS56CFL-S	$1,083	S1	41.82	TEFC	1.15	1.87	84.0	13.465	230/460	21
2	1.5	1800	145TC	00218ET3ESSR145TC-S	$1,335	S1	53.34	TEFC	1.15	2.72	86.5	13.925	230/460	21
		3600	145TC	00236ET3ESSR145TC-S	$1,354	S1	50.54	TEFC	1.15	2.47	85.5	13.925	230/460	21
		1800	56C	00218ET3HSS56CFL-S	$1,229	S1	51.65	TEFC	1.15	2.18	86.5	13.858	575	21
		1800	56C	00218ET3ESS56CFL-S	$1,228	S1	51.69	TEFC	1.15	2.72	86.5	13.858	230/460	21
		3600	56C	00236ET3ESS56CFL-S	$1,208	S1	49.23	TEFC	1.15	2.47	85.5	13.858	230/460	21
		3600	56C	00236ET3HSS56CFL-S	$1,215	S1	49.08	TEFC	1.15	1.98	85.5	13.858	575	21
3	2.2	3600	145TC	00336ET3ESSR145TC-S	$1,971	S1	50.54	TEFC	1.15	3.51	86.5	11.169	230/460	21
		1800	182TC	00318ET3ESSR182TC-S	$2,069	S1	94.5	TEFC	1.15	3.81	89.5	17.874	230/460	21
		3600	182TC	00336ET3ESSR182TC-S	$2,094	S1	70.17	TEFC	1.15	3.76	86.5	15.512	230/460	21
5	3.7	1800	184TC	00518ET3ESSR184TC-S	$2,349	S1	98.68	TEFC	1.15	6.49	89.5	17.874	230/460	21
		3600	184TC	00536ET3ESSR184TC-S	$2,421	S1	86.97	TEFC	1.15	5.9	88.5	16.693	230/460	21
7.5	5.5	1800	213TC	00718ET3ESSR213TC-S	$3,402	S1	160.97	TEFC	1.15	8.96	91.7	20.079	230/460	21
		3600	213TC	00736ET3ESSR213TC-S	$3,561	S1	133.49	TEFC	1.15	8.87	89.5	19.291	230/460	21
10	7.5	1800	213TC	01018ET3ESSR215TC-S	$3,688	S1	177.56	TEFC	1.15	12.1	91.7	21.654	230/460	21
		3600	215TC	01036ET3ESSR215TC-S	$3,823	S1	152.03	TEFC	1.15	11.9	90.2	20.079	230/460	21

W01 Shark® - Stainless Steel - TEFC & TENV - C Face - Foot Mount - AEGIS

HP	kW	RPM	Frame	Catalog Number	List Price	Mult. Symbol	Enclosure	Approx. Shipping Weight (lbs)	Service Factor	FL Amps @ High	FL. Eff (%)	"C" Dimension (in)	Voltage (V)	Notes
1	0.75	1800	56C	00118NT3HSS56C-SG	$1,145	S1	47.38	TENV	1.15	1.47	85.5	12.067	230/460	17; 21
2	1.5	1800	56C	00218ET3HSS56C-SG	$1,394	S1	52.72	TEFC	1.15	2.72	86.5	13.858	230/460	21
3	2.2	1800	182TC	00318ET3HSS182TC-SG	$2,221	S1	96.73	TEFC	1.15	3.81	89.5	17.878	230/460	21
5	3.7	1800	184TC	00518ET3HSS184TC-SG	$2,511	S1	100.91	TEFC	1.15	6.49	89.5	17.878	230/460	21
7.5	5.5	1800	213TC	00718ET3HSS213TC-SG	$3,570	S1	163.64	TEFC	1.15	8.96	91.7	20.079	230/460	21
10	7.5	1800	213TC	01018ET3HSS213TC-SG	$3,838	S1	180.18	TEFC	1.15	12.1	91.7	21.654	230/460	21

Please refer to inside back cover for description of "NOTES"

For detailed specifications, data sheets, drawings and performance curves visit http:// www.weg.net

Data subject to change without notice.

Shark® Motor and CFW500 Washdown Drive Quick Selection Quide

Shark® - Stainless Steel - TEFC & TENV - C-Face - Foot Mount

HP	RPM	Voltage (V)	Catalog Number	Motor List Price	Enclosure	460V Amps	230V Drive [1]	Drive List Price	460V Drive [1]	Drive List Price
0.33	1800	230/460	.3318EP3ESS56C	$675	TENV	0.53	CFW500A01P6B2DB66G2	$775	CFW500A01P0T4DB66G2	$950
0.5	3600	230/460	.5036EP3ESS56C	$618	TENV	0.65	CFW500A01P6B2DB66G2	$775	CFW500A01P0T4DB66G2	$950
	1800	230/460	.5018EP3ESS56C	$696	TENV	0.73	CFW500A02P6B2DB66G2	$800	CFW500A01P6T4DB66G2	$975
		230/460	.5012EP3ESS56C	$760	TENV	0.86	CFW500A02P6B2DB66G2	$800	CFW500A01P6T4DB66G2	$975
0.75	3600	230/460	.7536EP3ESS56C	$681	TENV	1.02	CFW500A02P6B2DB66G2	$800	CFW500A01P6T4DB66G2	$975
	1800	230/460	.7518EP3ESS56C	$798	TENV	1.06	CFW500A02P6B2DB66G2	$800	CFW500A01P6T4DB66G2	$975
		230/460	.7512EP3ESS56C	$868	TENV	1.22	CFW500A04P3B2DB66G2	$850	CFW500A01P6T4DB66G2	$975
1	3600	230/460	00136ET3ESS56C	$836	TEFC	1.45	CFW500A04P3B2DB66G2	$850	CFW500A02P6T4DB66G2	$990
	3600	230/460	00136NT3ESS56C	$912	TENV	1.45	CFW500A04P3B2DB66G2	$850	CFW500A02P6T4DB66G2	$990
	1800	230/460	00118ET3ESS56C	$994	TEFC	1.46	CFW500A04P3B2DB66G2	$850	CFW500A02P6T4DB66G2	$990
	1800	230/460	00118NT3ESS56C	$834	TENV	1.46	CFW500A04P3B2DB66G2	$850	CFW500A02P6T4DB66G2	$990
	1800	230/460	00118ET3ESS143TC	$1,042	TEFC	1.46	CFW500A04P3B2DB66G2	$850	CFW500A02P6T4DB66G2	$990
	1800	230/460	00118NT3ESS143TC	$1,026	TENV	1.46	CFW500A04P3B2DB66G2	$850	CFW500A02P6T4DB66G2	$990
1.5	3600	230/460	00156ET3ESS56C	$1,023	TEFC	1.99	CFW500A07P3B2DB66G2	$1,015	CFW500A02P6T4DB66G2	$990
	1800	230/460	00158ET3ESS56C	$1,041	TEFC	2.06	CFW500A07P3B2DB66G2	$1,015	CFW500A02P6T4DB66G2	$990
	1800	230/460	00158ET3ESS145TC	$1,082	TEFC	2.06	CFW500A07P3B2DB66G2	$1,015	CFW500A02P6T4DB66G2	$990
2	3600	230/460	00236ET3ESS56C	$1,146	TEFC	2.55	CFW500A07P3B2DB66G2	$1,015	CFW500A04P3T4DB66G2	$1,175
	3600	230/460	00236ET3ESS145TC	$1,290	TEFC	2.55	CFW500A07P3B2DB66G2	$1,015	CFW500A04P3T4DB66G2	$1,175
	1800	230/460	00218ET3ESS56C	$1,164	TEFC	2.71	CFW500A07P3B2DB66G2	$1,015	CFW500A04P3T4DB66G2	$1,175
	1800	230/460	00218ET3ESS145TC	$1,257	TEFC	2.78	CFW500A07P3B2DB66G2	$1,015	CFW500A04P3T4DB66G2	$1,175
3	3600	230/460	00336ET3ESS182TC	$1,989	TEFC	3.73	CFW500A10P0B2DB66G2	$1,095	CFW500A04P3T4DB66G2	$1,175
	1800	230/460	00318ET3ESS182TC	$1,908	TEFC	3.92	CFW500A10P0B2DB66G2	$1,095	CFW500A06P5T4DB66G2	$1,400
5	3600	230/460	00536ET3ESS184TC	$2,298	TEFC	6.01	CFW500A16P0T2DB66G2	$1,350	CFW500A10P0T4DB66G2	$1,650
	1800	230/460	00518ET3ESS184TC	$2,230	TEFC	6.54	CFW500A16P0T2DB66G2	$1,350	CFW500A10P0T4DB66G2	$1,650
7.5	3600	230/460	00736ET3ESS213TC	$3,377	TEFC	8.82	CFW500B24P0T2DB66G2	$1,950	CFW500B14P0T4DB66G2	$2,050
	3600	230/460	00718ET3ESS213TC	$3,228	TEFC	9.12	CFW500B24P0T2DB66G2	$1,950	CFW500B14P0T4DB66G2	$2,050
10	3600	230/460	01036ET3ESS215TC	$3,625	TEFC	11.50	CFW500B28P0T2DB66G2	$2,275	CFW500B14P0T4DB66G2	$2,050
	1800	230/460	01018ET3ESS215TC	$3,499	TEFC	12.20	CFW500B28P0T2DB66G2	$2,275	CFW500B14P0T4DB66G2	$2,050
15	3600	230/460	01536ET3ESS254TC	$5,990	TEFC	17.34	CFW500C47P0T2DB66G2	$3,750	CFW500B24P0T4DB66G2	$3,025
	1800	230/460	01518ET3ESS254TC	$5,980	TEFC	18.31	CFW500C47P0T2DB66G2	$3,750	CFW500B24P0T4DB66G2	$3,025
20	3600	230/460	02036ET3ESS256TC	$6,550	TEFC	22.87	CFW500C47P0T2DB66G2	$3,750	CFW500B24P0T4DB66G2	$3,025
	1800	230/460	02018ET3ESS256TC	$6,470	TEFC	23.97	CFW500C56P0T2DB66G2 [2]	$4,400	CFW500B24P0T4DB66G2	$3,025
25	3600	230/460	02536ET3ESS284TC	$7,950	TEFC	28.68	CFW500C56P0T2DB66G2 [2]	$4,400	CFW500B31P0T4DB66G2	$3,650
	1800	230/460	02518ET3ESS284TC	$7,750	TEFC	29.08	CFW500C56P0T2DB66G2 [2]	$4,400	CFW500B31P0T4DB66G2	$3,650
30	3600	230/460	03036ET3ESS286TC	$8,310	TEFC	34.42	CFW500C56P0T2DB66G2 [2]	$4,400	CFW500C39P0T4DB66G2	$4,795
	1800	230/460	03018ET3ESS286TC	$8,200	TEFC	34.90	CFW500C56P0T2DB66G2 [2]	$4,400	CFW500C39P0T4DB66G2	$4,795

Notes:
1. *Drives selected to match motor FLA.*
2. *Drive selection is for normal duty (variable torque) applications.*

Please refer to inside back cover for description of "NOTES"

For detailed specifications, data sheets, drawings and performance curves visit http:// www.weg.net

THREE -PHASE

Shark® Motor and CFW500 Washdown Drive

Quick Selection Quide

Shark® - Stainless Steel - TEFC & TENV - C-Face - Footless

HP	RPM	Voltage (V)	Catalog Number	Enclosure	Motor List Price	460V Amps	230V Drive [1]	Drive List Price	460V Drive	Drive List Price
0.33	1800	230/460	.3318EP3ESS56CFL	TENV	$667	0.53	CFW500A01P6B2DB66G2	$775	CFW500A01P0T4DB66G2	$950
0.5	3600	230/460	.5036EP3ESS56CFL	TENV	$611	0.65	CFW500A01P6B2DB66G2	$775	CFW500A01P0T4DB66G2	$950
	1800	230/460	.5018EP3ESS56CFL	TENV	$689	0.73	CFW500A02P6B2DB66G2	$800	CFW500A01P0T4DB66G2	$950
	1200	230/460	.5012EP3ESS56CFL	TENV	$752	0.86	CFW500A02P6B2DB66G2	$800	CFW500A01P0T4DB66G2	$950
0.75	3600	230/460	.7536EP3ESS56CFL	TENV	$674	1.02	CFW500A02P6B2DB66G2	$800	CFW500A01P6T4DB66G2	$975
	1800	230/460	.7518EP3ESS56CFL	TENV	$787	1.06	CFW500A02P6B2DB66G2	$800	CFW500A01P6T4DB66G2	$975
	1200	230/460	.7512EP3ESS56CFL	TENV	$862	1.22	CFW500A04P3B2DB66G2	$850	CFW500A01P6T4DB66G2	$975
1	3600	230/460	00136ET3ESS56CFL	TEFC	$827	1.45	CFW500A04P3B2DB66G2	$850	CFW500A02P6T4DB66G2	$990
	3600	230/460	00136NT3ESS56CFL	TENV	$898	1.45	CFW500A04P3B2DB66G2	$850	CFW500A02P6T4DB66G2	$990
	1800	230/460	00118ET3ESS56CFL	TEFC	$981	1.46	CFW500A04P3B2DB66G2	$850	CFW500A02P6T4DB66G2	$990
	1800	230/460	00118NT3ESS56CFL	TENV	$824	1.46	CFW500A04P3B2DB66G2	$850	CFW500A02P6T4DB66G2	$990
	1800	230/460	00118ET3ESS143TCFL	TEFC	$1,028	1.46	CFW500A04P3B2DB66G2	$850	CFW500A02P6T4DB66G2	$990
	1800	230/460	00118NT3ESS143TCFL	TENV	$1,014	1.46	CFW500A04P3B2DB66G2	$850	CFW500A02P6T4DB66G2	$990
1.5	3600	230/460	00156ET3ESS56CFL	TEFC	$1,017	1.99	CFW500A07P3B2DB66G2	$1,015	CFW500A02P6T4DB66G2	$990
	3600	230/460	00156ET3ESS143TCFL	TEFC	$1,117	1.99	CFW500A07P3B2DB66G2	$1,015	CFW500A02P6T4DB66G2	$990
	1800	230/460	00158ET3ESS56CFL	TEFC	$1,034	2.06	CFW500A07P3B2DB66G2	$1,015	CFW500A02P6T4DB66G2	$990
	1800	230/460	00158ET3ESS145TCFL	TEFC	$1,066	2.06	CFW500A07P3B2DB66G2	$1,015	CFW500A02P6T4DB66G2	$990
2	3600	230/460	00236ET3ESS56CFL	TEFC	$1,139	2.55	CFW500A07P3B2DB66G2	$1,015	CFW500A04P3T4DB66G2	$1,175
	3600	230/460	00236ET3ESS145TCFL	TEFC	$1,275	2.55	CFW500A07P3B2DB66G2	$1,015	CFW500A04P3T4DB66G2	$1,175
	1800	230/460	00218ET3ESS56CFL	TEFC	$1,154	2.71	CFW500A07P3B2DB66G2	$1,015	CFW500A04P3T4DB66G2	$1,175
	1800	230/460	00218ET3ESS145TCFL	TEFC	$1,198	2.78	CFW500A07P3B2DB66G2	$1,015	CFW500A04P3T4DB66G2	$1,175
3	3600	230/460	00336ET3ESS145TCFL	TEFC	$1,858	3.78	CFW500A10P0B2DB66G2	$1,095	CFW500A04P3T4DB66G2	$1,175
	3600	230/460	00336ET3ESS182TCFL	TEFC	$1,974	3.73	CFW500A10P0B2DB66G2	$1,095	CFW500A04P3T4DB66G2	$1,175
	1800	230/460	00318ET3ESS182TCFL	TEFC	$1,892	3.92	CFW500A10P0B2DB66G2	$1,095	CFW500A06P5T4DB66G2	$1,400
5	3600	230/460	00536ET3ESS184TCFL	TEFC	$2,282	6.01	CFW500A16P0T2DB66G2	$1,350	CFW500A10P0T4DB66G2	$1,650
	1800	230/460	00518ET3ESS184TCFL	TEFC	$2,215	6.54	CFW500A16P0T2DB66G2	$1,350	CFW500A10P0T4DB66G2	$1,650
7.5	3600	230/460	00736ET3ESS213TCFL	TEFC	$3,356	8.82	CFW500B24P0T2DB66G2	$1,950	CFW500B14P0T4DB66G2	$2,050
	1800	230/460	00718ET3ESS213TCFL	TEFC	$3,207	9.12	CFW500B24P0T2DB66G2	$1,950	CFW500B14P0T4DB66G2	$2,050
10	3600	230/460	01036ET3ESS215TCFL	TEFC	$3,604	11.50	CFW500B28P0T2DB66G2	$2,275	CFW500B14P0T4DB66G2	$2,050
	1800	230/460	01018ET3ESS215TCFL	TEFC	$3,477	12.20	CFW500B28P0T2DB66G2	$2,275	CFW500B14P0T4DB66G2	$2,050

Notes:
1. Drives selected to match motor FLA.

Please refer to inside back cover for description of "NOTES"

For detailed specifications, data sheets, drawings and performance curves visit http:// www.weg.net

Data subject to change without notice.

HydroWash®

The Washdown line was designed to meet the requirements of industries where there is a constant need for hygiene and cleanliness of the environment through high pressure water jets and/or chemical products. Washdown motors are applied in food, beverage and pharmaceutical industries.

Standard Features

- Output: 1/2 up to 25 HP
- Frames: 56 up to 254/6T
- 1200 - 3600 rpm
- Certification CSA/UL
- Efficiency: NEMA Premium
- Service factor: 1.15
- Mounting: F-1
- Insulation class “F” (ΔT 80 K)
- Degree of protection: IP56
- Shaft material: Stainless Steel (AISI 304)
- Bearing type: Shielded (2RS)
- Permatex on joints
- Color: Porcelain White - Munsell N 9.5
- Internal painting
- Breather on non drive endshield
- Drive end bearing seal: Oil seal with stainless steel spring and 304 stainless steel high pressure external shaft slinger
- Non drive end bearing seal: Oil seal with stainless steel spring

Factory Options

- Other mountings (F2, F3)
- Voltage: 575 V with 6 leads
- Space heaters
- Thermal protection
- Cable glands
- Threaded center hole (shaft)
- SGR shaft grounding ring (Inverter use)
- Shaft material: Stainless Steel (AISI 316)
- Dripcover

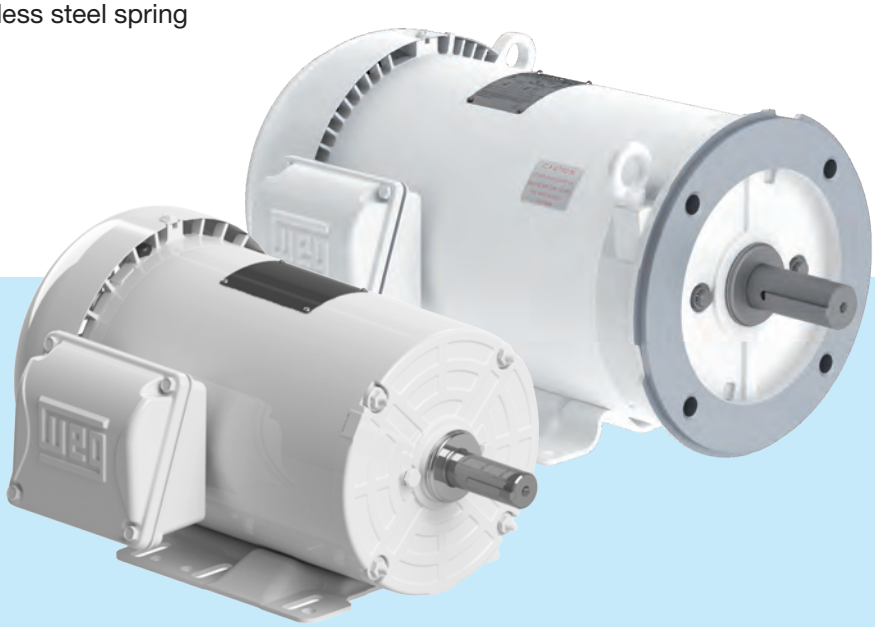

General Purpose Wash Down Duty

THREE -PHASE

Superior Products - Superior Parts

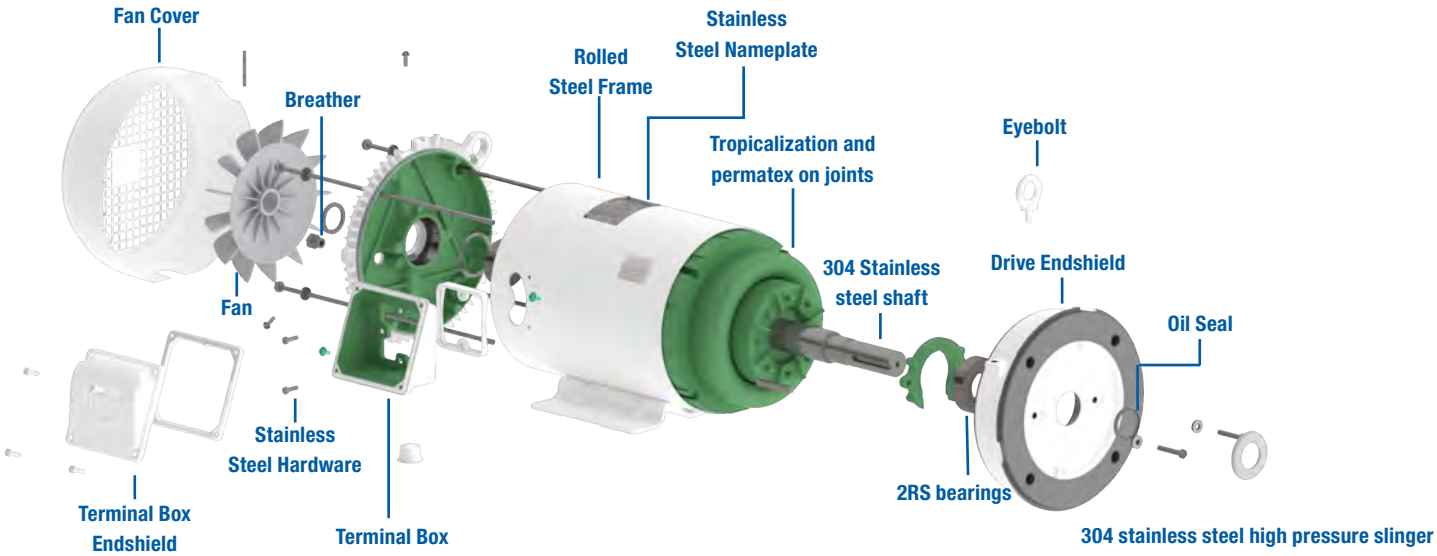

HydroWash®

Find the **Drive Match** for your **HydroWash®** Motor on page 159

C-Face Foot Mount

HP	RPM	Frame	Catalog Number	List Price	Multi.	Enclosure	Service Factor	Voltage (V)	FL Amps @ High	"C" Dimension	kVA Code	Appr. Ship. Wt (lbs)
0.5	3600	56C	.5036NT3EHW56C-S	$560	S2	TENV	1.15	230/460	0.8	9.646	N	23
0.5	1800	56C	.5018NT3EHW56C-S	$615	S2	TENV	1.15	230/460	1.0	10.433	P	28
0.75	3600	56C	.7536NT3EHW56C-S	$630	S2	TENV	1.15	230/460	1.1	10.039	N	26
0.75	1800	56C	.7518NT3EHW56C-S	$675	S2	TENV	1.15	230/460	1.3	10.827	N	31
0.75	1200	56C	.7512ET3EHW56C-S	$725	S2	TEFC	1.15	230/460	1.3	13.113	K	36
1	3600	56C	00136NT3EHW56C-S	$735	S2	TENV	1.15	230/460	1.4	10.682	N	32
1	3600	143/5TC	00136NT3EHW143TC-S	$758	S2	TENV	1.15	230/460	1.4	11.541	N	32
1	1800	143/5TC	00118NT3EHW143TC-S	$834	S2	TENV	1.15	230/460	1.5	11.541	M	38
1	1800	143/5TC	00118NT3HHW143TC-S	$834	S2	TENV	1.15	575	1.2	11.541	M	38
1	1800	56C	00118NT3EHW56C-S	$805	S2	TENV	1.15	230/460	1.5	11.614	M	38
1	1200	56C	00112NT3EHW56C-S	$898	S2	TENV	1.15	230/460	1.8	12.008	L	42
1.5	3600	56C	00156NT3EHW56C-S	$749	S2	TENV	1.15	230/460	1.9	11.863	M	39
	3600	143/5TC	00156NT3EHW145TC-S	$768	S2	TENV	1.15	230/460	1.9	11.541	M	39
	1800	56C	00158ET3EHW56C-S	$833	S2	TEFC	1.15	230/460	2.0	13.113	K	38
	1800	143/5TC	00158NT3EHW145TC-S	$853	S2	TENV	1.15	230/460	1.5	11.541	L	42
	1800	143/5TC	00158NT3HHW145TC-S	$853	S2	TENV	1.15	575	1.8	11.541	L	42
2	3600	143/5TC	00236ET3EHW145TC-S	$870	S2	TEFC	1.15	230/460	2.7	13.976	K	43
	3600	56C	00236ET3EHW56C-S	$850	S2	TEFC	1.15	230/460	2.5	13.113	L	40
	1800	143/5TC	00218ET3EHW145TC-S	$950	S2	TEFC	1.15	230/460	2.7	13.976	K	43
	1800	56C	00218ET3EHW56C-S	$944	S2	TEFC	1.15	230/460	2.7	13.906	K	42
	1800	143/5TC	00218ET3HHW145TC-S	$950	S2	TEFC	1.15	575	2.2	13.976	K	42
	1200	182/4TC	00212ET3EHW184TC-S	$1,410	S2	TEFC	1.15	230/460	3.0	17.126	K	91
3	3600	143/5TC	00336ET3EHW145TC-S	$975	S2	TEFC	1.15	230/460	3.5	15.157	K	48
	3600	182/4TC	00336ET3EHW182TC-S	$1,409	S2	TEFC	1.15	230/460	3.7	16.339	K	77
	1800	182/4TC	00318ET3EHW182TC-S	$1,380	S2	TEFC	1.15	230/460	3.8	17.913	K	94
	1200	213/5TC	00312ET3EHW213TC-S	$1,850	S2	TEFC	1.15	230/460	4.2	19.291	H	144
5	3600	182/4TC	00536ET3EHW184TC-S	$1,700	S2	TEFC	1.15	230/460	5.9	17.913	J	92
	1800	182/4TC	00518ET3EHW184TC-S	$1,728	S2	TEFC	1.15	230/460	6.5	17.913	J	88

continued on next page

Please refer to inside back cover for description of "NOTES"

For detailed specifications, data sheets, drawings and performance curves visit http:// www.weg.net

THREE -PHASE

C-Face Foot Mount, *continued*

HP	RPM	Frame	Catalog Number	List Price	Multi.	Enclosure	Service Factor	Voltage (V)	FL Amps @ High	"C" Dimension	kVA Code	Appr. Ship. Wt (lbs)
7 .5	3600	182/4TC	00736ET3EHW184TC-S	$2,082	S2	TEFC	1.15	230/460	8.6	17.126	H	96
	3600	213/5TC	00736ET3EHW213TC-S	$2,214	S2	TEFC	1.15	230/460	8.7	20.079	H	145
	1800	213/5TC	00718ET3EHW213TC-S	$2,230	S2	TEFC	1.15	230/460	9.1	18.898	H	136
	1200	254/6TC	00712ET3EHW254TC-S	$3,795	S2	TEFC	1.15	230/460	10.0	22.559	G	239
10	3600	213/5TC	01036ET3EHW215TC-S	$2,650	S2	TEFC	1.15	230/460	11.5	21.654	H	175
	1800	213/5TC	01018ET3EHW215TC-S	$2,568	S2	TEFC	1.15	230/460	12.2	19.291	H	147
	1200	254/6TC	01012ET3EHW256TC-S	$4,345	S2	TEFC	1.15	230/460	13.8	23.346	G	269
15	3600	213/5TC	01536ET3EHW215TC-S	$3,250	S2	TEFC	1.15	230/460	17.0	21.654	J	171
	3600	254/6TC	01536ET3EHW254TC-S	$4,859	S2	TEFC	1.15	230/460	17.4	22.559	G	210
	1800	254/6TC	01518ET3EHW254TC-S	$4,826	S2	TEFC	1.15	230/460	18.2	22.559	G	242
20	3600	254/6TC	02036ET3EHW256TC-S	$5,772	S2	TEFC	1.15	230/460	22.7	23.346	G	248
	1800	254/6TC	02018ET3EHW256TC-S	$5,830	S2	TEFC	1.15	230/460	24.7	23.346	H	271
25	3600	254/6TC	02536ET3EHW256TC-S	$6,887	S2	TEFC	1.15	230/460	28.5	23.346	J	258

HydroWash®

Find the **Drive Match** for your **HydroWash®** Motor on page 160

C-Face Footless

HP	RPM	Frame	Catalog Number	List Price	Multi.	Enclosure	Service Factor	Voltage (V)	FL Amps @ High	"C" Dimension	kVA Code	Appr. Ship. Wt (lbs)
0.5	1800	56C	.5018NT3EHW56CFL-S	$608	S2	TENV	1.15	230/460	1.0	10.288	P	28
0.75	1800	56C	.7518NT3EHW56CFL-S	$678	S2	TENV	1.15	230/460	1.3	10.682	N	31
1	1800	56C	00118NT3EHW56CFL-S	$803	S2	TENV	1.15	230/460	1.5	11.469	M	38
	1800	143TC	00118NT3EHWR143TC-S	$816	S2	TENV	1.15	230/460	1.5	11.614	M	38
1.5	1800	56C	00158ET3EHW56CFL-S	$865	S2	TEFC	1.15	230/460	2.0	13.503	K	38
	1800	145TC	00158ET3EHWR145TC-S	$888	S2	TEFC	1.15	230/460	1.1	13.582	K	38
2	1800	56C	00218ET3EHW56CFL-S	$971	S2	TEFC	1.15	230/460	2.7	13.897	K	42
	1800	145TC	00218ET3EHWR145TC-S	$978	S2	TEFC	1.15	230/460	2.7	13.976	K	42
3	3600	56C	00336NT3HHWR145TC-S	$894	S2	TENV	1.15	575	3.2	13.438	R	43
	3600	56C	00336NT3EHWR145TC-S	$894	S2	TENV	1.15	230/460	4.0	13.438	R	43
	1800	182/4TC	00318ET3EHWR182TC-S	$1,259	S2	TEFC	1.15	230/460	3.81	17.913	K	94
5	3600	182/4TC	00536ET3EHWR182TC-S	$1,600	S2	TEFC	1.15	230/460	5.90	17.913	J	92
	1800	182/4TC	00518ET3EHWR184TC-S	$1,592	S2	TEFC	1.15	230/460	6.49	17.913	J	87
7.5	3600	213/5TC	00736ET3EHWR213TC-S	$2,010	S2	TEFC	1.15	230/460	8.67	20.079	H	151
	1800	213/5TC	00718ET3EHWR213TC-S	$2,011	S2	TEFC	1.15	230/460	9.07	18.898	H	137
10	3600	213/5TC	01036ET3EHWR215TC-S	$2,442	S2	TEFC	1.15	230/460	11.50	21.654	H	180
	3600	213/5TC	01018ET3EHWR215TC-S	$2,394	S2	TEFC	1.15	230/460	12.20	19.291	H	147
15	3600	213/5TC	01536ET3EHWR215TC-S	$3,052	S2	TEFC	1.15	230/460	17.00	21.654	J	176

For detailed specifications, data sheets, drawings and performance curves visit http:// www.weg.net

Data subject to change without notice.

HydroWash®

JM - White Epoxy - TEFC - C-Face, Foot Mount, IP56

HP	kW	RPM	Frame	Catalog Number	List Price	Mult. Symbol	Enclosure	HZ	SF	FL Amps @ high	"C" Dimension (in)	kVA Code	Appr. Ship. Wt (lbs)
1	0.75	1800	143/5JM	00118ET3EHW143JM-S	$988	S2	TEFC	60	1.15	1.47	16.25	M	37.9
1.5	1.12	3600	143/5JM	00156ET3EHW143JM-S	$1,005	S2	TEFC	60	1.15	1.87	15.86	L	34.2
		1800	143/5JM	00158ET3EHW145JM-S	$1,016	S2	TEFC	60	1.15	2.02	16.25	K	37.9
2	1.49	3600	143/5JM	00236ET3EHW145JM-S	$1,039	S2	TEFC	60	1.15	2.47	16.65	L	40.1
		1800	143/5JM	00218ET3EHW145JM-S	$1,124	S2	TEFC	60	1.15	2.72	16.65	K	42.3
3	2.24	3600	182/4JM	00336ET3EHW182JM-S	$1,662	S2	TEFC	60	1.15	3.76	17.03	K	63.5
3	2.24	1800	182/4JM	00318ET3EHW182JM-S	$1,825	S2	TEFC	60	1.15	3.81	19.39	K	80.3
5	3.73	3600	182/4JM	00536ET3EHW184JM-S	$2,015	S2	TEFC	60	1.15	4.4	18.21	J	78.5
		1800	182/4JM	00518ET3EHW184JM-S	$2,197	S2	TEFC	60	1.15	6.49	19.39	J	71.4
7.5	5.59	3600	213/5JM	00736ET3EHW213JM-S	$2,653	S2	TEFC	60	1.15	8.87	20.02	J	133
		1800	213/5JM	00718ET3EHW213JM-S	$2,801	S2	TEFC	60	1.15	8.96	20.02	H	120
10	7.46	3600	213/5JM	01036ET3EHW215JM-S	$3,259	S2	TEFC	60	1.15	11.9	21.2	J	161
		1800	213/5JM	01018ET3EHW215JM-S	$3,250	S2	TEFC	60	1.15	12.1	20.41	H	130
15	11.19	3600	213/5JM	01536ET3EHW215JM-S	$3,611	S2	TEFC	60	1.15	17	22.78	J	154
		3600	254/6JM	01536ET3EHW254JM-S	$5,484	S2	TEFC	60	1.15	17.4	24.07	G	175
		1800	254/6JM	01518ET3EHW254JM-S	$5,825	S2	TEFC	60	1.15	18.2	24.07	G	197
20	14.91	3600	254/6JM	02036ET3EHW256JM-S	$6,661	S2	TEFC	60	1.15	22.7	24.86	G	211
		1800	254/6JM	02018ET3EHW256JM-S	$6,769	S2	TEFC	60	1.15	24.7	24.86	H	227

Please refer to inside back cover for description of "NOTES"

For detailed specifications, data sheets, drawings and performance curves visit http:// www.weg.net

General Purpose Wash Down Duty

THREE -PHASE

HydroWash®

Rigid Base

HP	RPM	Frame	Catalog Number	List Price	Multi.	Enclosure	Service Factor	Voltage (V)	FL Amps @ High	"C" Dimension	kVA Code	Appr. Ship. Wt (lbs)
0.5	1800	56	.5018NT3EHW56-S	$610	S2	TENV	1.15	230/460	0.986	10.291	P	28
	1800	56	.5018NT3HHW56-S	$615	S2	TENV	1.15	575	0.789	10.291	P	28
0.75	1800	56	.7518NT3EHW56-S	$668	S2	TENV	1.15	230/460	1.3	10.685	N	31
	1800	56	.7518NT3HHW56-S	$670	S2	TENV	1.15	575	1.04	10.685	N	31
1	3600	143T	00136NT3EHW56-S	$750	S2	TENV	1.15	230/460	1.42	10.788	N	32
	1800	56	00118NT3HHW56-S	$796	S2	TENV	1.15	575	1.18	11.473	M	38
	1800	56	00118NT3EHW56-S	$796	S2	TENV	1.15	230/460	1.47	11.473	M	38
	1200	145T	00112NT3EHW145T-S	$918	S2	TEFC	1.15	230/460	1.58	13.976	J	39
1.5	3600	143T	00156NT3EHW143TC-S	$749	S2	TENV	1.15	230/460	1.93	11.699	M	39
	1800	145T	00158NT3HHW145T-S	$834	S2	TENV	1.15	575	1.82	11.574	L	42
	1800	145T	00158NT3EHW145T-S	$834	S2	TENV	1.15	230/460	2.28	11.574	L	42
2	3600	145T	00236ET3EHW145T-S	$836	S2	TENV	1.15	230/460	2.75	12.362	P	43
	1800	145T	00218ET3HHW145T-S	$931	S2	TEFC	1.15	575	2.18	13.582	K	42
	1800	145T	00218ET3EHW145T-S	$931	S2	TEFC	1.15	230/460	2.72	13.582	K	42
3	3600	182/4T	00336ET3EHW182T-S	$1,340	S2	TEFC	1.15	230/460	3.7	16.339	K	67
	1800	182/4T	00318ET3EHW182T-S	$1,315	S2	TEFC	1.15	230/460	3.8	17.913	K	89
5	3600	182/4T	00536ET3EHW184T-S	$1,628	S2	TEFC	1.15	230/460	5.9	17.913	J	87
	1800	182/4T	00518ET3EHW184T-S	$1,640	S2	TEFC	1.15	230/460	6.5	17.913	J	82
7.5	3600	182/4T	00736ET3EHW184T-S	$1,978	S2	TEFC	1.15	230/460	8.6	17.126	H	91
	3600	213/5T	00736ET3EHW213T-S	$2,040	S2	TEFC	1.15	230/460	8.7	20.079	H	145
	1800	213/5T	00718ET3EHW213T-S	$2,046	S2	TEFC	1.15	230/460	9.1	18.898	H	133
10	1800	213/5T	01018ET3EHW215T-S	$2,350	S2	TEFC	1.15	230/460	12.2	19.291	H	140
15	1800	254/6T	01518ET3EHW254T-S	$4,602	S2	TEFC	1.15	230/460	18.2	22.559	G	236
20	1800	254/6T	02018ET3EHW256T-S	$5,571	S2	TEFC	1.15	230/460	24.7	23.346	H	266

Please refer to inside back cover for description of "NOTES"

For detailed specifications, data sheets, drawings and performance curves visit http:// www.weg.net

Data subject to change without notice.

HydroWash® Motor and CFW500 Washdown Drive Quick Selection Quide

HydroWash® - White Epoxy - TEFC - C-Face - Foot Mount

HP	RPM	Volts	Catalog Number	Motor List Price	FL Amps @ high	230V Drive	Drive List Price	460V Drive	Drive List Price
0.5	1800	230/460	.5018NT3EHW56C*	$644	0.80	CFW500A01P6B2DB66G2	$775	CFW500A01P0T4DB66G2	$950
0.75	1800	230/460	.7518NT3EHW56C*	$720	1.20	CFW500A02P6B2DB66G2	$800	CFW500A01P6T4DB66G2	$975
1	1800	230/460	00118NT3EHW56C*	$843	1.50	CFW500A04P3B2DB66G2	$850	CFW500A01P6T4DB66G2	$975
		230/460	00118NT3EHW143TC*	$859	1.50	CFW500A04P3B2DB66G2	$850	CFW500A01P6T4DB66G2	$975
1.5	1800	230/460	00158ET3EHW56C	$860	2.20	CFW500A07P3B2DB66G2	$1,015	CFW500A02P6T4DB66G2	$990
		230/460	00158ET3EHW145TC	$880	2.20	CFW500A07P3B2DB66G2	$1,015	CFW500A02P6T4DB66G2	$990
2	1800	230/460	00218ET3EHW56C	$1,035	2.80	CFW500A07P3B2DB66G2	$1,015	CFW500A04P3T4DB66G2	$1,175
		230/460	00218ET3EHW145TC	$1,060	2.80	CFW500A07P3B2DB66G2	$1,015	CFW500A04P3T4DB66G2	$1,175
2	1200	230/460	00212ET3EHW184TC-S	$1,410	3.0	CFW500A07P3B2DB66G2	$1,015	CFW500A04P3T4DB66G2	$1,175
3	3600	230/460	00336ET3EHW182TC-S	$1,409	3.7	CFW500A10P0B2DB66G2	$1,095	CFW500A04P3T4DB66G2	$1,175
3	1800	230/460	00318ET3EHW182TC-S	$1,380	3.8	CFW500A10P0B2DB66G2	$1,095	CFW500A04P3T4DB66G2	$1,175
3	1200	230/460	00312ET3EHW213TC-S	$1,850	4.2	CFW500A10P0B2DB66G2	$1,095	CFW500A04P3T4DB66G2	$1,175
5	3600	230/460	00536ET3EHW184TC-S	$1,700	5.9	CFW500A16P0T2DB66G2	$1,350	CFW500A06P5T4DB66G2	$1,400
5	1800	230/460	00518ET3EHW184TC-S	$1,728	6.5	CFW500A16P0T2DB66G2	$1,350	CFW500A06P5T4DB66G2	$1,400
5	1200	230/460	00512ET3EHW215TC-S	$2,185	6.7	CFW500A16P0T2DB66G2	$1,350	CFW500A10P0T4DB66G2	$1,650
7.5	3600	230/460	00736ET3EHW184TC-S	$2,082	8.6	CFW500B24P0T2DB66G2	$1,950	CFW500A10P0T4DB66G2	$1,650
7.5	3600	230/460	00736ET3EHW213TC-S	$2,214	8.7	CFW500B24P0T2DB66G2	$1,950	CFW500A10P0T4DB66G2	$1,650
7.5	1800	230/460	00718ET3EHW213TC-S	$2,230	9.1	CFW500B24P0T2DB66G2	$1,950	CFW500A10P0T4DB66G2	$1,650
7.5	1200	230/460	00712ET3EHW254TC-S	$3,795	10.0	CFW500B24P0T2DB66G2	$1,950	CFW500A10P0T4DB66G2	$1,650
10	3600	230/460	01036ET3EHW215TC-S	$2,650	11.5	CFW500B24P0T2DB66G2	$1,950	CFW500B14P0T4DB66G2	$2,050
10	1800	230/460	01018ET3EHW215TC-S	$2,568	12.2	CFW500B28P0T2DB66G2	$2,275	CFW500B14P0T4DB66G2	$2,050
10	1200	230/460	01012ET3EHW256TC-S	$4,345	13.8	CFW500B28P0T2DB66G2	$2,275	CFW500B14P0T4DB66G2	$2,050
15	3600	230/460	01536ET3EHW215TC-S	$3,250	17.0	-	-	CFW500B24P0T4DB66G2	$3,025
15	3600	230/460	01536ET3EHW254TC-S	$4,859	17.4	-	-	CFW500B24P0T4DB66G2	$3,025
15	1800	230/460	01518ET3EHW254TC-S	$4,826	18.2	-	-	CFW500B24P0T4DB66G2	$3,025
20	3600	230/460	02036ET3EHW256TC-S	$5,772	22.7	-	-	CFW500B24P0T4DB66G2	$3,025
20	1800	230/460	02018ET3EHW256TC-S	$5,830	24.7	-	-	CFW500B31P0T4DB66G2	$3,650
25	3600	230/460	02536ET3EHW256TC-S	$6,887	28.5	-	-	CFW500B31P0T4DB66G2	$3,650

* TENV

continued on next page

Please refer to inside back cover for description of "NOTES"

For detailed specifications, data sheets, drawings and performance curves visit http:// www.weg.net

THREE -PHASE

HydroWash® - White Epoxy - TEFC - C-Face - Footless

HP	RPM	Volts	Catalog Number	Motor List Price	460V Amps	230V Drive	Drive List Price	460V Drive	Drive List Price
0.5	1800	230/460	.5018NT3EHW56CFL*	$510	0.80	CFW500A01P6B2DB66G2	$775	CFW500A01P0T4DB66G2	$950
0.75	1800	230/460	.7518NT3EHW56CFL*	$553	1.20	CFW500A02P6B2DB66G2	$800	CFW500A01P6T4DB66G2	$975
1	1800	230/460	00118NT3EHW56CFL*	$599	1.50	CFW500A04P3B2DB66G2	$850	CFW500A01P6T4DB66G2	$975
		230/460	00118NT3EHWR143TC*	$628	1.50	CFW500A04P3B2DB66G2	$850	CFW500A01P6T4DB66G2	$975
1.5	1800	230/460	00158ET3EHW56CFL	$830	2.20	CFW500A07P3B2DB66G2	$1,015	CFW500A02P6T4DB66G2	$990
		230/460	00158ET3EHWR145TC	$850	2.20	CFW500A07P3B2DB66G2	$1,015	CFW500A02P6T4DB66G2	$990
2	1800	230/460	00218ET3EHW56CFL	$995	2.80	CFW500A07P3B2DB66G2	$1,015	CFW500A04P3T4DB66G2	$1,175
		230/460	00218ET3EHWR145TC	$1,020	2.80	CFW500A07P3B2DB66G2	$1,015	CFW500A04P3T4DB66G2	$1,175
3	1800	230/460	00318ET3EHWR182TC-S	$1,259	3.81	CFW500A10P0B2DB66G2	$1,095	CFW500A04P3T4DB66G2	$1,175
5	3600	230/460	00536ET3EHWR182TC-S	$1,600	5.90	CFW500A16P0T2DB66G2	$1,350	CFW500A06P5T4DB66G2	$1,400
5	1800	230/460	00518ET3EHWR184TC-S	$1,592	6.49	CFW500A16P0T2DB66G2	$1,350	CFW500A06P5T4DB66G2	$1,400
7.5	3600	230/460	00736ET3EHWR213TC-S	$2,010	8.67	CFW500B24P0T2DB66G2	$1,950	CFW500A10P0T4DB66G2	$1,650
7.5	1800	230/460	00718ET3EHWR213TC-S	$2,011	9.07	CFW500B24P0T2DB66G2	$1,950	CFW500A10P0T4DB66G2	$1,650
10	3600	230/460	01036ET3EHWR215TC-S	$2,442	11.50	CFW500B24P0T2DB66G2	$1,950	CFW500B14P0T4DB66G2	$2,050
10	1800	230/460	01018ET3EHWR215TC-S	$2,394	12.20	CFW500B28P0T2DB66G2	$2,275	CFW500B14P0T4DB66G2	$2,050
15	3600	230/460	01536ET3EHWR215TC-S	$3,052	17.00	-	-	CFW500B24P0T4DB66G2	$3,025

*TENV

HydroWash® - White Epoxy - TEFC - Rigid Base

HP	RPM	Volts	Catalog Number	Motor List Price	460V Amps	230V Drive	Drive List Price	460V Drive	Drive List Price
3	3600	230/460	00336ET3EHW182T-S	$1,340	3.7	CFW500A10P0B2DB66G2	$1,095	CFW500A04P3T4DB66G2	$1,175
3	1800	230/460	00318ET3EHW182T-S	$1,315	3.8	CFW500A10P0B2DB66G2	$1,095	CFW500A04P3T4DB66G2	$1,175
5	3600	230/460	00536ET3EHW184T-S	$1,628	5.9	CFW500A16P0T2DB66G2	$1,350	CFW500A06P5T4DB66G2	$1,400
5	1800	230/460	00518ET3EHW184T-S	$1,640	6.5	CFW500A16P0T2DB66G2	$1,350	CFW500A06P5T4DB66G2	$1,400
7.5	3600	230/460	00736ET3EHW184T-S	$1,978	8.6	CFW500B24P0T2DB66G2	$1,950	CFW500A10P0T4DB66G2	$1,650
7.5	3600	230/460	00736ET3EHW213T-S	$2,040	8.7	CFW500B24P0T2DB66G2	$1,950	CFW500A10P0T4DB66G2	$1,650
7.5	1800	230/460	00718ET3EHW213T-S	$2,046	9.1	CFW500B24P0T2DB66G2	$1,950	CFW500A10P0T4DB66G2	$1,650
10	1800	230/460	01018ET3EHW215T-S	$2,350	12.2	CFW500B28P0T2DB66G2	$2,275	CFW500B14P0T4DB66G2	$2,050
15	1800	230/460	01518ET3EHW254T-S	$4,602	18.2	-	-	CFW500B24P0T4DB66G2	$3,025
20	1800	230/460	02018ET3EHW256T-S	$5,571	24.7	-	-	CFW500B31P0T4DB66G2	$3,650

Please refer to inside back cover for description of "NOTES"

For detailed specifications, data sheets, drawings and performance curves visit http:// www.weg.net

Data subject to change without notice.

CFW500-G2 (GENERATION-2)

The CFW500 has advanced technology plug and play options, developed for fast commissioning, providing great flexibility and competitive advantage while offering excellent performance and reliability. Designed for exclusively industrial or professional use, perfect for OEM, system integrators, panel installers and End Users providing great benefit from the added value. With Generation-2 (G2), the CFW500 drives now offer more features in the same footprint as Generation-1 drives. The power range of CFW500-IP20-G2 drive is now extended to 75HP @ 230VAC and 175HP @ 460VAC. The CFW500-G2 drive also is also available in IP66/ NEMA4X Washdown enclosure which is rated for indoor and outdoor installation in direct sunlight.

Standard Features

- Same programming as other WEG VFDs including CFW500-Generation-1 drives.
- Built-in SoftPLC.
- Scalar, Vector Control (Sensorless and closed loop with encoder feedback) & VVW PM (suitable for fan, Pump and compressor).
- IP20 & NEMA1 (with NEMA1 kit) Enclosure.
- NEMA 4X (IP66) Washdown Enclosure with and without disconnect switch, suitable for indoor and outdoor use (in direct sunlight).
- 200-240V, 380-480V or 500-600 input voltage.
- Heavy Duty rated - 150% current overload capacity.
- 0 to 500 Hz output frequency.
- 2.5 to 15 kHz adjustable switching frequency (5 kHz standard)
- Built-in 24Vdc Power supply (max. 150 mA).
- Built-in RS-485 (Modbus RTU/BACnet) communication.
- Four isolated programmable digital inputs.
- One programmable relay output (1NO, 1NC, 240vac 0.5A).
- One programmable transistor output.
- One isolated programmable analog input (0-10V, 0/4-20mA).
- One isolated programmable analog output (0-10V, 0/4-20mA).
- Optional Safe Torque off Module.
- Pump Genius – Simplex, Multiplex (up to three pumps in parallel) like CFW11 Pump Genius.
- WLP and WPS compatible.

For Indoor / Outdoor Use

Applications

- Pumps
- Fans/ventilators
- Blowers
- Conveyors
- Rollout tables
- Mixers/Blenders
- Commercial dryers
- Extruders
- General machinery
- Agitators
- Any washdown (for NEMA4X/IP66)

CFW500 - N4X/IP66 WASHDOWN VFD W/O DISCONNECT SWITCH

Motor Voltage	ND/VT [1]		HD/CT [1]		Catalog Number	Braking Transistor	Frame Size [4]	Dimensions (in.) HxWxD	Approx. Weight (lbs.)	List Price	Multiplier New (Old)
	Motor HP [2]	Drive Amps [3]	Motor HP [2]	Drive Amps [3]							
230 Vac / 3 Phase	**Input Power Supply: Single or Three-Phase 200-240 Vac**										
	1/3	1.6	1/3	1.6	CFW500A01P6B2DB66G2	Yes	A	10.4 x 6.5 x 8.9	22.0	**$775**	V1W (V1)
	3/4	2.6	3/4	2.6	CFW500A02P6B2DB66G2	Yes	A	10.4 x 6.5 x 8.9	22.0	**$800**	V1W (V1)
	1 1/2	4.3	1 1/2	4.3	CFW500A04P3B2DB66G2	Yes	A	10.4 x 6.5 x 8.9	22.0	**$850**	V1W (V1)
	2	7.3	2	7.3	CFW500A07P3B2DB66G2	Yes	A	10.4 x 6.5 x 8.9	22.0	**$1,015**	V1W (V1)
	3	10	3	10	CFW500A10P0B2DB66G2	Yes	A	10.4 x 6.5 x 8.9	22.0	**$1,095**	V1W (V1)
	Input Power Supply: Three-Phase 200-240 Vac										
	5	16	5	16	CFW500A16P0T2DB66G2	Yes	A	10.4 x 6.5 x 8.9	22.0	**$1,350**	V1W (V1)
	7 1/2	24	7 1/2	24	CFW500B24P0T2DB66G2	Yes	B	13.4 x 8.5 x 8.9	26.5	**$1,950**	V1W (V1)
	10	28	10	28	CFW500B28P0T2DB66G2	Yes	B	13.4 x 8.5 x 8.9	26.5	**$2,275**	V1W (V1)
	10	33	10	33	CFW500B33P0T2DB66G2	Yes	B	13.4 x 8.5 x 8.9	26.5	**$2,675**	V1W (V1)
	15	47	15	47	CFW500C47P0T2DB66G2 [5]	Yes	C	18.7 x 12.6 x 11.4	45.0	**$3,750**	V1W (V1)
	25	70	20	56	CFW500C56P0T2DB66G2 [5]	Yes	C	18.7 x 12.6 x 11.4	45.0	**$4,400**	V1W (V1)
460 Vac / 3 Phase	**Input Power Supply: Three-Phase 380-480 Vac**										
	1/2	1	1/2	1	CFW500A01P0T4DB66G2	Yes	A	10.4 x 6.5 x 8.9	22.0	**$950**	V1W (V1)
	1	1.6	1	1.6	CFW500A01P6T4DB66G2	Yes	A	10.4 x 6.5 x 8.9	22.0	**$975**	V1W (V1)
	1 1/2	2.6	1 1/2	2.6	CFW500A02P6T4DB66G2	Yes	A	10.4 x 6.5 x 8.9	22.0	**$990**	V1W (V1)
	3	4.3	3	4.3	CFW500A04P3T4DB66G2	Yes	A	10.4 x 6.5 x 8.9	22.0	**$1,175**	V1W (V1)
	5	6.5	5	6.5	CFW500A06P5T4DB66G2	Yes	A	10.4 x 6.5 x 8.9	22.0	**$1,400**	V1W (V1)
	7 1/2	10	7 1/2	10	CFW500A10P0T4DB66G2	Yes	A	10.4 x 6.5 x 8.9	22.0	**$1,650**	V1W (V1)
	10	14	10	14	CFW500B14P0T4DB66G2	Yes	B	13.4 x 8.5 x 8.9	26.5	**$2,050**	V1W (V1)
	10	16	10	16	CFW500B16P0T4DB66G2	Yes	B	13.4 x 8.5 x 8.9	26.5	**$2,275**	V1W (V1)
	15	24	15	24	CFW500B24P0T4DB66G2	Yes	B	13.4 x 8.5 x 8.9	26.5	**$3,025**	V1W (V1)
	25	31	25	31	CFW500B31P0T4DB66G2	Yes	B	13.4 x 8.5 x 8.9	26.5	**$3,650**	V1W (V1)
	30	45	30	39	CFW500C39P0T4DB66G2 [5]	Yes	C	18.7 x 12.6 x 11.4	45.0	**$4,795**	V1W (V1)
	50	59.2	40	49	CFW500C49P0T4DB66G2 [5]	Yes	C	18.7 x 12.6 x 11.4	45.0	**$6,100**	V1W (V1)
575 Vac / 3 Phase [6]	**Input Power Supply: Three-Phase 500-600 Vac**										
	1 1/2	1.7	1 1/2	1.7	CFW500B01P7T5DB66	Yes	B	13.4 x 8.5 x 8.9	26.5	**$1,590**	V1W (V1)
	3	3	3	3	CFW500B03P0T5DB66	Yes	B	13.4 x 8.5 x 8.9	26.5	**$1,670**	V1W (V1)
	3	4.3	3	4.3	CFW500B04P3T5DB66	Yes	B	13.4 x 8.5 x 8.9	26.5	**$1,890**	V1W (V1)
	7 1/2	7	7 1/2	7	CFW500B07P0T5DB66	Yes	B	13.4 x 8.5 x 8.9	26.5	**$2,115**	V1W (V1)
	10	10	10	10	CFW500B10P0T5DB66	Yes	B	13.4 x 8.5 x 8.9	26.5	**$2,330**	V1W (V1)
	10	12	10	12	CFW500B12P0T5DB66	Yes	B	13.4 x 8.5 x 8.9	26.5	**$2,615**	V1W (V1)

NOTES:
1. *ND (Normal Duty) / VT (Variable Torque): 110% Overload / 60 Sec;*
   HD (Heavy Duty) / CT (Constant Torque): 150% Overload / 60 Sec;
2. *"HP" rating based on WEG W22 motors "average FLA values". Use as a guide only.*
3. *Motor FLA may vary with speed and manufacturer. ALWAYS compare motor FLA to Nominal AMPS of drive.*
4. *Frame Size A, B & C are rated for 40°C ambient temperature.*
5. *Available in 3Q of 2024.*
6. *All 575V drives are non-stocked items and are still Generation-1 drives, consult WEG for availability.*

Please refer to back cover for description of "NOTES"

CFW500 - N4X/IP66 WASHDOWN VFD WITH DISCONNECT SWITCH

Motor Voltage	ND/VT [1] Motor HP [2]	ND/VT [1] Drive Amps [3]	HD/CT [1] Motor HP [2]	HD/CT [1] Drive Amps [3]	Catalog Number	Braking Transistor	Frame Size [4]	Dimensions (in.) HxWxD	Approx. Weight (lbs.)	List Price	Multiplier New (Old)
230 Vac / 3 Phase	**Input Power Supply: Single or Three-Phase 200-240 Vac**										
	1/3	1.6	1/3	1.6	CFW500A01P6B2DB66DSG2	Yes	A	10.4 x 6.5 x 9.9	22.0	**$895**	V1W (V1)
	3/4	2.6	3/4	2.6	CFW500A02P6B2DB66DSG2	Yes	A	10.4 x 6.5 x 9.9	22.0	**$920**	V1W (V1)
	1 1/2	4.3	1 1/2	4.3	CFW500A04P3B2DB66DSG2	Yes	A	10.4 x 6.5 x 9.9	22.0	**$980**	V1W (V1)
	2	7.3	2	7.3	CFW500A07P3B2DB66DSG2	Yes	A	10.4 x 6.5 x 9.9	22.0	**$1,170**	V1W (V1)
	3	10	3	10	CFW500A10P0B2DB66DSG2	Yes	A	10.4 x 6.5 x 9.9	22.0	**$1,255**	V1W (V1)
	Input Power Supply: Three-Phase 200-240 Vac										
	5	16	5	16	CFW500A16P0T2DB66DSG2	Yes	A	10.4 x 6.5 x 9.9	22.0	**$1,555**	V1W (V1)
	7 1/2	24	7 1/2	24	CFW500B24P0T2DB66DSG2	Yes	B	13.4 x 8.5 x 9.9	26.5	**$2,245**	V1W (V1)
	10	28	10	28	CFW500B28P0T2DB66DSG2	Yes	B	13.4 x 8.5 x 9.9	26.5	**$2,620**	V1W (V1)
	10	33	10	33	CFW500B33P0T2DB66DSG2	Yes	B	13.4 x 8.5 x 9.9	26.5	**$3,080**	V1W (V1)
	15	47	15	47	CFW500C47P0T2DB66DSG2 [5]	Yes	C	18.7 x 12.6 x 12.4	45.0	**$4,313**	V1W (V1)
	25	70	20	56	CFW500C56P0T2DB66DSG2 [5]	Yes	C	18.7 x 12.6 x 12.4	45.0	**$5,060**	V1W (V1)
460 Vac / 3 Phase	**Input Power Supply: Three-Phase 380-480 Vac**										
	1/2	1	1/2	1	CFW500A01P0T4DB66DSG2	Yes	A	10.4 x 6.5 x 9.9	22.0	**$1,095**	V1W (V1)
	1	1.6	1	1.6	CFW500A01P6T4DB66DSG2	Yes	A	10.4 x 6.5 x 9.9	22.0	**$1,125**	V1W (V1)
	1 1/2	2.6	1 1/2	2.6	CFW500A02P6T4DB66DSG2	Yes	A	10.4 x 6.5 x 9.9	22.0	**$1,140**	V1W (V1)
	3	4.3	3	4.3	CFW500A04P3T4DB66DSG2	Yes	A	10.4 x 6.5 x 9.9	22.0	**$1,350**	V1W (V1)
	5	6.5	5	6.5	CFW500A06P5T4DB66DSG2	Yes	A	10.4 x 6.5 x 9.9	22.0	**$1,610**	V1W (V1)
	7 1/2	10	7 1/2	10	CFW500A10P0T4DB66DSG2	Yes	A	10.4 x 6.5 x 9.9	22.0	**$1,900**	V1W (V1)
	10	14	10	14	CFW500B14P0T4DB66DSG2	Yes	B	13.4 x 8.5 x 9.9	26.5	**$2,360**	V1W (V1)
	10	16	10	16	CFW500B16P0T4DB66DSG2	Yes	B	13.4 x 8.5 x 9.9	26.5	**$2,620**	V1W (V1)
	15	24	15	24	CFW500B24P0T4DB66DSG2	Yes	B	13.4 x 8.5 x 9.9	26.5	**$3,480**	V1W (V1)
	25	31	25	31	CFW500B31P0T4DB66DSG2	Yes	B	13.4 x 8.5 x 9.9	26.5	**$4,200**	V1W (V1)
	30	45	30	39	CFW500C39P0T4DB66DSG2 [5]	Yes	C	18.7 x 12.6 x 12.4	45.0	**$5,514**	V1W (V1)
	50	59.2	40	49	CFW500C49P0T4DB66DSG2 [5]	Yes	C	18.7 x 12.6 x 12.4	45.0	**$7,015**	V1W (V1)
575 Vac / 3 Phase [6]	**Input Power Supply: Three-Phase 500-600 Vac**										
	1 1/2	1.7	1 1/2	1.7	CFW500B01P7T5DB66DS	Yes	B	13.4 x 8.5 x 9.9	26.5	**$1,830**	V1W (V1)
	3	3	3	3	CFW500B03P0T5DB66DS	Yes	B	13.4 x 8.5 x 9.9	26.5	**$1,925**	V1W (V1)
	3	4.3	3	4.3	CFW500B04P3T5DB66DS	Yes	B	13.4 x 8.5 x 9.9	26.5	**$2,175**	V1W (V1)
	7 1/2	7	7 1/2	7	CFW500B07P0T5DB66DS	Yes	B	13.4 x 8.5 x 9.9	26.5	**$2,435**	V1W (V1)
	10	10	10	10	CFW500B10P0T5DB66DS	Yes	B	13.4 x 8.5 x 9.9	26.5	**$2,680**	V1W (V1)
	10	12	10	12	CFW500B12P0T5DB66DS	Yes	B	13.4 x 8.5 x 9.9	26.5	**$3,005**	V1W (V1)

NOTES:
1. ND (Normal Duty) / VT (Variable Torque): 110% Overload / 60 Sec;
HD (Heavy Duty) / CT (Constant Torque): 150% Overload / 60 Sec;
2. "HP" rating based on WEG W22 motors "average FLA values". Use as a guide only.
3. Motor FLA may vary with speed and manufacturer. ALWAYS compare motor FLA to Nominal AMPS of drive.
4. Frame Size A, B & C are rated for 40°C ambient temperature.
5. Available in 3Q of 2024.
6. All 575V drives are non-stocked items and are still Generation-1 drives, consult WEG for availability.

Options and Accessories

Type	CATALOG NUMBER	Description	Apprx. Shpg. Wt. (lbs.)	List Price	Multiplier New (Old)
I/O	CFW500-IOS [1]	CFW500 I/O Module; 4 DI, 1 AI, 1 AO, 1 DOR, 1 DOT, 1 RS485, 10vdc, 24vdc	0.2	$110	V1G (V1)
I/O	CFW500-IOD	CFW500 I/O Module; 8 DI, 1 AI, 1 AO, 1 DOR, 4 DOT, 1 RS485, 10vdc, 24vdc	0.2	$141	V1G (V1)
I/O	CFW500-IOAD	CFW500 I/O Module; 6 DI, 3 AI, 2 AO, 1 DOR, 3 DOT, 1 RS485, 10vdc, 24vdc	0.2	$182	V1G (V1)
I/O	CFW500-IOR-B	CFW500 I/O Module; 5 DI, 1 AI, 1 AO, 4 DOR, 1 DOT, 1 RS485, 10vdc, 24vdc	0.2	$125	V1G (V1)
Encoder Input	CFW500-ENC	CFW500 Encoder Module; Quad Input A & B, 1 RS485, 5 DI, 1 AI, 1 AO, 3 DOR, 1 DOT, 24vdc	0.2	$210	V1G (V1)
USB Card	CFW500-CUSB	CFW500 Comm. Module; 1 USB, 1 RS485, 4 DI, 1 AI, 1 AO, 1 DOR, 1 DOT, 10vdc, 24vdc	0.2	$210	V1G (V1)
RS232 Card	CFW500-CRS232	CFW500 Comm. Module; 1 RS232, 1 RS485, 4 DI, 1 AI, 1 AO, 1 DOR, 1 DOT, 24vdc	0.2	$138	V1G (V1)
RS485 Card	CFW500-CRS485-B	CFW500 Comm. Module; 2 RS485, 4 DI, 2 AI, 1 AO, 2 DOR, 1 DOT, 10vdc, 24vdc	0.2	$143	V1G (V1)
CANopen Card	CFW500-CCAN	CFW500 Comm. Module; 1 CAN/DeviceNet, 1 RS485, 2 DI, 1 AI, 1 AO, 1 DOR, 1 DOT, 10vdc, 24vdc	0.2	$138	V1G (V1)
Profibus DP Card	CFW500-CPDP	CFW500 Comm. Module; 2 DI, 1 AI, 1 AO, 1 DOR, 1 DOT, 1 Profibus DP, 1 RS485, 24vdc (DB9 connector)	0.2	$405	V1G (V1)
Profibus DP & DP-V1 Module	CFW500-CPDP2	CFW500 Comm. Module; 1-Profibus DP & DP-V1 100BASE TX RJ-45 Port, 1-RS485, 2-DI, 1-AI, 1-AO, 1-DOR, 1-DOT, 24vdc (Terminal Block Connector)	0.2	$445	V1G (V1)
Modbus TCP Comm. Module	CFW500-CEMB-TCP	CFW500 Comm. Module; 1-Modbus TCP 100BASE TX RJ-45 Port, 1-RS485, 2-DI, 1-AI, 1-AO, 1-DOR, 1-DOT, 24vdc	0.2	$499	V1G (V1)
ProfiNet I/O Comm. Module	CFW500-CEPN-IO	CFW500 Comm. Module; 1-ProfiNet I/O 100BASE TX RJ-45 Port, 1-RS485, 2-DI, 1-AI, 1-AO, 1-DOR, 1-DOT, 24vdc	0.2	$499	V1G (V1)
EtherNet IP Comm. Module	CFW500-CETH-IP	CFW500 Comm. Module; 2-DI, 1-AI, 1-AO, 1-DOR, 1-DOT, 1-RS485, 1-EtherNet IP 100BASE TX RJ-45 Port, 24vdc	0.2	$499	V1G (V1)
Dual Port Ethernet Module (Ethernet/IP or Modbus TCP)	CFW500-CETH2	CFW500 Dual Port Comm. Module: 2-DI, 1-AI, 1-DOT, 1-RS485, 2-EtherNet 100BASE TX RJ-45 Ports. **Note: The module will require external 24vdc power to use 1-DOT. The CFW500-G2 drive must have FM V3.9x or above to use this module.**	0.3	$575	V1G (V1)
STO Module	CFW500-SFY2 [2]	CFW500 Safety Function Module; Safe Torque Off (STO) / Stop Category 0, Safe Stop 1 Time Controlled (SS1-t) / Stop Category 1; Safety Category: SIL 3, PL e	1.8	$140	V1G (V1)
STO Module Plug	CFW50X-STO-JMP	CFW50x STO module plug	0.2	$12	PTD
Flash Memory Module	CFW500-MMF	CFW500 Flash Memory Module for saving and reloading program and parameters to / from the drive.	0.2	$189	V1G (V1)
Remote Keypad - Non Text	CFW500-HMIR [3]	CFW500 Remote non-text Keypad for mounting through enclosure door (Mounting Frame Kit is not required).	0.6	$169	V1G (V1)
Remote Keypad - Advanced Text	HMI-01 [4]	CFW500 Remote Advanced Text Keypad for mounting through enclosure door (Mounting Frame Kit is required).	0.4	$205	V1G (V1)
Remote Keypad - Advanced Text Frame Kit	CFW500-RHMIF	CFW500 Remote Advanced Text Keypad enclosure door mounting frame kit	0.5	$25	V1G (V1)
HMI Cable 1M	CFW500-CCHMIR01M	3.3 ft (1 meter) Remote Keypad Cable	0.5	$23	V1G (V1)
HMI Cable 2M	CFW500-CCHMIR02M	6.6 ft (2 meter) Remote Keypad Cable	0.7	$31	V1G (V1)
HMI Cable 3M	CFW500-CCHMIR03M	9.9 ft (3 meter) Remote Keypad Cable	1.0	$41	V1G (V1)
HMI Cable 5M	CFW500-CCHMIR05M	16 ft (5 meter) Remote Keypad Cable	1.2	$51	V1G (V1)
HMI Cable 7.5M	CFW500-CCHMIR075M	25 ft (7.5 meter) Remote Keypad Cable	1.5	$61	V1G (V1)
HMI Cable 10M	CFW500-CCHMIR010M	33 ft (10 meter) Remote Keypad Cable	2.0	$72	V1G (V1)
NEMA1 Conduit Kit	CFW500-KN1A	NEMA 1 kit – Frame Size A	2.0	$28	V1G (V1)
NEMA1 Conduit Kit	CFW500-KN1B	NEMA 1 kit – Frame Size B	3.0	$33	V1G (V1)
NEMA1 Conduit Kit	CFW500-KN1C	NEMA 1 kit – Frame Size C	3.0	$44	V1G (V1)
NEMA1 Conduit Kit	CFW500-KN1D	NEMA 1 kit – Frame Size D	3.0	$59	V1G (V1)
NEMA1 Conduit Kit	CFW500-KN1E	NEMA 1 kit – Frame Size E	6.0	$64	V1G (V1)
NEMA1 Conduit Kit	CFW500-KN1F	NEMA 1 kit – Frame Size F	12.0	$165	V1G (V1)
NEMA1 Conduit Kit	CFW500-KN1G	NEMA 1 kit – Frame Size G	17.0	$215	V1G (V1)
Cable Shield Clamp Kit	CFW500-KPCSA	Cable Shield Clamp Kit for Frame A	1.0	$41	V1G (V1)
Cable Shield Clamp Kit	CFW500-KPCSB	Cable Shield Clamp Kit for Frame B	1.0	$44	V1G (V1)
Cable Shield Clamp Kit	CFW500-KPCSC	Cable Shield Clamp Kit for Frame C	1.1	$46	V1G (V1)
Cable Shield Clamp Kit	CFW500-KPCSD	Cable Shield Clamp Kit for Frame D	1.1	$51	V1G (V1)
Cable Shield Clamp Kit	CFW500-KPCSE	Cable Shield Clamp Kit for Frame E	6.0	$64	V1G (V1)
Cable Shield Clamp Kit	CFW500-KPCSF	Cable Shield Clamp Kit for Frame F	15.0	$140	V1G (V1)
Cable Shield Clamp Kit	CFW500-KPCSG	Cable Shield Clamp Kit for Frame G	18.0	$180	V1G (V1)
CFW500 Demo Suitcase	CFW500-DEMO-BLK	CFW500 Black Demo Suitcase with Remote Text keypad and STO Module	45.0	$5,585	V1G (V1)

Notes:

1) The "CFW500-IOS" module is included as standard with CFW500-IP20 & IP66 Drives.
2) The "CFW500-SFY2" Module can be installed in the CFW500-IP20 & IP66 drives in addition to the "CFW500-IOS" or any other I/O or communication module. The "CFW500-SFY2" module only works with 230V & 460VAC, CFW500-G2 (Generation-2) drives.For CFW500-IP20, Frame-A to E VFDs, the NEMA1 Kit top cover to protect the VFD from falling dust can not be used if the "CFW500-SFY2" is installed on the drive.
3) The "CFW500-HMIR" Remote Keypad (Non-Text) requires Qty. (1) CFW500-CCHIR0xM cable. ("x" represents the cable length in meters)
4) The "HMI-01" remote Keypad (Advanced Text) requires Qty. (1) CFW500-RHMIF & Qty. (1) CFW500-CCHIR0xM cable. ("x" represents the cable length in meters). This keypad only works with 230VAC & 460VAC, CFW500-G2 (Generation-2) drives.

Please refer to back cover for description of "NOTES"

CFW500-N4X/IP66 Technical Data

Technical Data

Power rating	Power supply	Tolerance: -15 to +10%
		Frequency: 50/60 Hz (48 Hz to 62 Hz)
		Phase imbalance: ≤3% of the rated phase-phase input voltage
		Transient voltages and overvoltages according to Category III (EN 61010/UL 508C)
		Maximum of 10 (line) connections per hour (1 every 6 minutes)
		Typical efficiency: ≥97%
Control	Method	V/F (scalar) VVW: voltage vector control Vector without encoder (sensorless) and closed loop vector with encoder PM VVW: voltage vector control for permanent magnet motors
	Output frequency	0 to 500 Hz, resolution of 0.015 Hz
Performance	V/F Control	Speed regulation: 1% of the rated speed (with slip compensation) Speed variation range: 1:20
	Vector control (VVW)	Speed regulation: 1% of the rated speed Speed variation range: 1:30
	Sensorless	Speed regulation: 0.5% of the rated speed Speed variation range: 1:100
	Vector control with Encoder	Speed regulation: 0.1% of the rated speed Speed variation range: 1:100
	PM VVW Control	Regulation: 0.1 % of the rated speed Speed variation range: 1:20
Environment conditions	Temperature around the CFW500	14°F to 122°F (-10 °C to 50 °C) - IP20 (sizes A to E) 14°F to 104°F (-10 °C to 40 °C) - IP20 (sizes A to E) when installed side by side 14°F to 104°F (-10 °C to 40 °C) - NEMA 1 (sizes A to E) 14°F to 104°F (-10 °C to 40 °C) - IP20, NEMA 1 (size F) 14°F to 113°F (-10 °C to 45 °C) - IP20, NEMA 1 (size G) 14°F to 104°F (-10 °C to 40 °C) - IP66 (sizes A & B) For CFW500-IP20-Frame A to E & CFW500-IP66-Frame A & B, when operating temperatures are above the specification, it is necessary to apply 2% of current derating for each Celsius degree (ºC), limited to an increase of 10 °C. For CFW500-IP20-Frame F & G, when operating temperatures are above the specification, it is necessary to apply 1% of current derating for each Celsius degree (°C) up to 50 °C, and 2% up to 60 °C (maximum).
	Aggressive environments	Protection Class 3C2 - Standard coating on the internal circuits, according to IEC 60721-3-3 (standard model)
		Protection Class 3C3 - Extra coating - optional, according to IEC 60721-3-3 (optional)
	Air relative humidity	5% to 95% non-condensing
	Altitude	Up to 1,000 m (maximum altitude under normal conditions) 1,000 to 4,000 m: current derating of 1% for each 100 m above 1,000 m of altitude
	Pollution degree	2 (EN 50178 and UL 508C), with non-conductive pollution Condensation must not cause conduction of the accumulated residues
Inputs[1)]	Analog	1 isolated input. Levels: (0 to 10) V or (0 to 20) mA or (4 to 20) mA Linearity error ≤0.25% Impedance: 100 kΩ for voltage input, 500 Ω for current input Programmable functions, including PTC input Maximum voltage accepted in the inputs: 30 V dc
	Digital	4 isolated inputs Programmable functions: Active high (PNP): maximum low level of 15 V dc; minimum high level of 20 V dc Active low (NPN): maximum low level of 5 V dc; minimum high level of 9 V dc Maximum input voltage of 30 V dc Input current: 4.5 mA Maximum input current: 5.5 mA
Outputs[1)]	Analog	1 isolated output. Levels (0 to 10) V or (0 to 20) mA or (4 to 20) mA Linearity error ≤0.25% Programmable functions RL ≥10 kΩ (0 to 10 V) or RL ≤500 Ω (0 to 20 mA / 4 to 20 mA)
	Relay	1 relay with NO/NC contact Maximum voltage: 240 V ac Maximum current of 0.5 A Programmable functions
	Transistor	1 isolated open sink digital output (using as reference the 24 V dc power supply) Maximum current of 150 mA (maximum capacity of the 24 V dc power supply)[2)] Programmable functions
	Power supply	24 V dc power supply. Maximum capacity: 150 mA[2)] Power supply of 10 V dc. Maximum capacity: 2 mA
Communication	Selectable plug-in	Standard Communication: One RS485 (Modbus RTU / BACnet) Port. Optional: CANopen, DeviceNet, Profibus-DP, EtherNet/IP, Modbus-TCP, PROFINET IO, USB, RS485 (two Ports) and RS232 port
Safety	Protection	Phase-phase overcurrent/short circuit in the output Phase-ground overcurrent/short circuit in the output Undervoltage/overvoltage in the power Overtemperature of the heatsink Motor overload Overload on the power module (IGBTs) External fault / alarm Programming error
Operating interface (keypad)	Standard (built in the CFW500)	9 keys: Run/Stop, Increment, Decrement, Direction of rotation, Jog, Local/Remote, Back/Esc and Enter/Menu LCD Display It allows accessing/changing all the parameters Accuracy of the indications: Current: 5% of the rated current Speed resolution: 0.1 Hz
Protection degree	IP20	Sizes A, B, C, D, E, F and G
	NEMA1	Sizes A, B, C, D, E, F and G with NEMA1 kit
	IP66/NEMA4X (Indoor/Outdoor)	Sizes A and B

Notes: 1) The number and/or types of analog/digital inputs/outputs may vary according to the plug-in module (accessory) used. In the table above, the standard plug-in module (CFW500-IOS) was taken into account. For further information, refer to the CFW500 user manual.
2) The maximum capacity of 150 mA considers the load of the 24 V power supply plus the transistor output, that is, the sum of the consumption of both must not exceed 150 mA.

SINGLE-PHASE

TEFC – Foot Mount A-169
TEFC – C-Face – Foot Mount A-170
TEFC – C-Face – Footless A-170
TEFC – Foot Mount – Thermally Protected. A-171
ODP – Foot Mount. A-172
ODP – Resilient Base A-173
ODP – C-Face – Foot Mount A-174
ODP – C-Face – Footless A-175
ODP – Foot Mount – Thermally Protected A-175

THREE-PHASE

TEFC – Foot Mount A-176
TEFC – C-Face – Foot Mount A-177
TEFC – C-Face – Footless A-178
TEFC – Footless – Explosion Proof A-178
ODP – Foot Mount. A-179
ODP – C-Face – Foot Mount A-180
ODP – C-Face – Footless A-181
ODP – Resilient Base A-181

DC MOTORS

NEMA 56 PMDC Motors A-182
NEMA 145TC PMDC Motors A-182

EXPLOSION PROOF - SINGLE-PHASE

Foot Mount A-184
C-Face – Foot Mount A-184
C-Face – Footless A-185

EXPLOSION PROOF - THREE-PHASE

Foot Mount A-186
C-Face – Foot Mount A-186

Fractional Motors

Single-Phase TEFC & ODP

High Starting Torque makes these motors ideal for a wide range of applications.

Standard Features:

- Ball bearings
- Class F insulation

ODP

TEFC

Features that make a difference:

- High Starting Torque
- TEFC motors are rated IP55 (gasketed conduit box and capacitor cover)

Resilient Base

Fractional Motors

Three-Phase TEFC & ODP

High Starting Torque makes these motors ideal for a wide range of applications.

ODP

TEFC

Resilient Base

Standard Features:

- 50/60 Hz Rated
- Ball bearings
- Class F insulation

Inverter Rated							
	Max Ambient temp.	Efficiency	Frame	Output	Poles	CT Constant Torque	VT Variable torque
ODP	Up to 40°C	None (Standard Eff)	48 - 56	<1Hp	-	4:1	1000:1
				≥ 1Hp	-	2:1	
		Premium Efficiency	48 - 56	<1Hp	2	5:1	
				≥ 1Hp	2	3:1	
				-	4 and 6	5:1	
TEFC		None (Standard Eff)	48 - 56	<1Hp	-	10:1	
				≥ 1Hp	-	5:1	
		Premium Efficiency	48 - 56	-	2	10:1	
				-	4, 6 and 8	4:1	

Features that make a difference:

- Motors are suitable for VFD operation (TEFC)
- 50/60 Hz Rated
- Service Factor 1.15 or better
- TEFC rated IP55 (gasketed conduit box and capacitor cover)

Please refer to inside back cover for description of "NOTES"

For detailed specifications, data sheets, drawings and performance curves visit http:// www.weg.net

Data subject to change without notice.

TEFC - Foot Mount

HP	kW	RPM	Frame	Catalog Number	List Price	Mult. Symbol	Approx. Shipping Weight (lbs)	Service Factor	FL Amps @ High	FL. Eff (%)	"C" Dimension (in)	Voltage (V)	Notes
0.25	0.18	3600	W56	**.2536ES1BW56-S**	**$257**	F1	20	1.15	2.10	50.0	10.713	115/208-230	9
		1800	W56	**.2518ES1BW56-S**	**$267**	F1	20	1.15	2.30	57.0	11.106	115/208-230	9
0.33	0.25	3600	W56	**.3336ES1BW56-S**	**$267**	F1	23	1.15	2.60	54.0	11.106	115/208-230	9
		1800	W56	**.3318ES1BW56-S**	**$283**	F1	22	1.15	3.00	61.0	11.500	115/208-230	9
		1800	W56	**.3318ES1RFDW56-S**	**$284**	R1	22	1.15	3.00	61.0	11.500	115/230	4;9
0.5	0.37	3600	W56	**.5036ES1BW56-S**	**$284**	F1	24	1.15	3.50	60.0	11.500	115/208-230	9
		3600	W56	**.5036ES1BOLW56-S**	**$316**	F1	24	1.15	3.50	60.0	11.500	115/208-230	4;9
		1800	W56	**.5018ES1RFDW56-S**	**$308**	R1	25	1.15	4.00	64.0	11.894	115/230	4;9
		1800	W56	**.5018ES1BW56-S**	**$312**	F1	24	1.15	4.00	64.0	11.894	115/208-230	9
		1200	W56	**.5012ES1B56-S**	**$512**	F1	38	1.15	3.20	71.0	13.508	115/208-230	9
0.75	0.55	3600	56	**.7536ES1BOL56-S**	**$329**	F1	31	1.15	4.00	66.0	12.721	115/208-230	4;9
		3600	56	**.7536ES1B56-S**	**$297**	F1	31	1.15	4.00	66.0	12.721	115/208-230	9
		1800	56	**.7518ES1RFD56-S**	**$357**	R1	34	1.15	5.30	68.5	13.114	115/230	4;9
		1800	56	**.7518ES1B56-S**	**$348**	F1	33	1.15	5.30	68.5	13.114	115/208-230	9
		1200	56H	**.7512ES1B56-S**	**$648**	F1	44	1.15	4.70	70.0	14.295	115/208-230	9
1	0.75	3600	56	**00136ES1BOL56-S**	**$408**	F1	35	1.15	5.10	70.0	13.114	115/208-230	4;9
		3600	56	**00136ES1B56-S**	**$376**	F1	34	1.15	5.10	70.0	13.114	115/208-230	9
		1800	56	**00118ES1RFD56-S**	**$394**	R1	40	1.15	6.80	71.0	13.901	115/230	4;9
		1800	56	**00118ES1B56-S**	**$401**	F1	39	1.15	6.80	71.0	13.902	115/208-230	9
1.5	1.1	3600	56	**00156ES1B56-S**	**$432**	F1	39	1.15	6.60	75.0	13.902	115/208-230	9
		3600	56	**00156ES1BOL56-S**	**$463**	F1	39	1.15	6.60	75.0	13.902	115/208-230	4;9
		1800	56H	**00158ES1RFD56H-S**	**$502**	R1	51	1.15	7.50	77.0	15.083	115/230	4;9
		1800	56H	**00158ES1B56-S**	**$456**	F1	40	1.15	7.50	77.0	15.083	115/208-230	9
2	1.5	3600	56H	**00236ES1BOL56-S**	**$592**	F1	44	1.15	8.70	77.0	14.295	115/208-230	4;9
		3600	56H	**00236ES1B56-S**	**$561**	F1	44	1.15	8.70	77.0	14.295	115/208-230	9
		1800	56H	**00218ES1RFD56H-S**	**$529**	R1	56	1.15	10.0	78.5	15.870	115/230	4;9

Please refer to inside back cover for description of "NOTES"

For detailed specifications, data sheets, drawings and performance curves visit http://www.weg.net

Fractional Motors

SINGLE -PHASE

TEFC - C-Face - Foot Mount

HP	kW	RPM	Frame	Catalog Number	List Price	Mult. Symbol	Approx. Shipping Weight (lbs)	Service Factor	FL Amps @ High	FL. Eff (%)	"C" Dimension (in)	Voltage (V)	Notes
0.25	0.18	3600	W56C	**.2536ES1BW56C-S**	**$280**	F1	20	1.15	2.10	50.0	10.713	115/208-230	9
		1800	W56C	**.2518ES1BW56C-S**	**$288**	F1	20	1.15	2.30	57.0	11.106	115/208-230	9
0.33	0.25	3600	W56C	**.3336ES1BW56C-S**	**$288**	F1	22	1.15	2.60	54.0	11.106	115/208-230	9
		1800	W56C	**.3318ES1BW56C-S**	**$304**	F1	22	1.15	3.00	61.0	11.500	115/208-230	9
0.5	0.37	3600	W56C	**.5036ES1BW56C-S**	**$313**	F1	24	1.15	3.50	60.0	11.500	115/208-230	9
		1800	W56C	**.5018ES1BW56C-S**	**$333**	F1	26	1.15	4.00	64.0	11.894	115/208-230	9
		1800	W56C	**.5018ES1BOW56C-S**	**$348**	F1	24	1.15	4.00	64.0	11.894	115/208-230	3;9
		1200	W56C	**.5012ES1B56C-S**	**$535**	F1	39	1.15	3.20	67.0	13.508	115/208-230	9
0.75	0.55	3600	56C	**.7536ES1B56C-S**	**$353**	F1	32	1.15	4.00	66.0	12.721	115/208-230	9
		1800	56C	**.7518ES1B56C-S**	**$370**	F1	34	1.15	5.30	68.5	13.114	115/208-230	9
		1200	56HC	**.7512ES1B56C-S**	**$669**	F1	45	1.15	4.70	70.0	14.295	115/208-230	9
1	0.75	3600	56C	**00136ES1B56C-S**	**$378**	F1	35	1.15	5.10	70.0	13.114	115/208-230	9
		1800	56C	**00118ES1B56C-S**	**$424**	F1	40	1.15	6.80	71.0	13.902	115/208-230	9
		1800	56C	**00118ES1BO56C-S**	**$439**	F1	40	1.15	6.80	71.0	13.902	115/208-230	3;9
1.5	1.1	3600	56C	**00156ES1B56C-S**	**$454**	F1	40	1.15	6.60	75.0	13.902	115/208-230	9
		1800	56HC	**00158ES1BO56C-S**	**$493**	F1	41	1.15	7.50	77.0	15.083	115/208-230	3;9
		1800	56HC	**00158ES1B56C-S**	**$478**	F1	41	1.15	7.50	77.0	15.083	115/208-230	9
2	1.5	3600	56HC	**00236ES1B56C-S**	**$589**	F1	44	1.15	8.70	77.0	14.295	115/208-230	9

TEFC - C-Face - Footless

HP	kW	RPM	Frame	Catalog Number	List Price	Mult. Symbol	Approx. Shipping Weight (lbs)	Service Factor	FL Amps @ High	FL. Eff (%)	"C" Dimension (in)	Voltage (V)	Notes
0.33	0.25	3600	W56C	**.3336ES1BW56CFL-S**	**$288**	F1	21	1.15	2.60	53.0	11.106	115/208-230	9;20
		1800	W56C	**.3318ES1BW56CFL-S**	**$304**	F1	22	1.15	3.00	61.0	11.500	115/208-230	9;20
0.5	0.37	3600	W56C	**.5036ES1BW56CFL-S**	**$313**	F1	24	1.15	3.50	60.0	11.500	115/208-230	9;20
		1800	W56C	**.5018ES1BW56CFL-S**	**$333**	F1	24	1.15	4.00	64.0	11.894	115/208-230	9;20
		1200	56C	**.5012ES1B56CFL-S**	**$535**	F1	38	1.15	3.20	71.0	13.508	115/208-230	9;20
0.75	0.55	3600	56C	**.7536ES1B56CFL-S**	**$353**	F1	31	1.15	4.00	66.0	12.721	115/208-230	9;20
		1800	56C	**.7518ES1B56CFL-S**	**$370**	F1	34	1.15	5.30	68.5	13.114	115/208-230	9;20
		1200	56C	**.7512ES1B56CFL-S**	**$669**	F1	44	1.15	4.70	70.0	14.295	115/208-230	9;20
1	0.75	3600	56C	**00136ES1B56CFL-S**	**$378**	F1	35	1.15	5.10	70.0	13.114	115/208-230	9;20
		1800	56C	**00118ES1B56CFL-S**	**$424**	F1	39	1.15	6.80	71.0	13.902	115/208-230	9;20
1.5	1.1	3600	56C	**00156ES1B56CFL-S**	**$454**	F1	39	1.15	6.60	75.0	13.902	115/208-230	9;20
		1800	56C	**00158ES1B56CFL-S**	**$478**	F1	40	1.15	7.50	77.0	15.083	115/208-230	9;20
2	1.5	3600	56C	**00236ES1B56CFL-S**	**$589**	F1	43	1.15	8.70	77.0	14.295	115/208-230	9;20

Please refer to inside back cover for description of "NOTES"

For detailed specifications, data sheets, drawings and performance curves visit http:// www.weg.net

Data subject to change without notice.

TEFC - Foot Mount - Thermally Protected

HP	kW	RPM	Frame	Catalog Number	List Price	Mult. Symbol	Approx. Shipping Weight (lbs)	Service Factor	FL Amps @ High	FL. Eff (%)	"C" Dimension (in)	Voltage (V)	Notes
0.33	0.25	1800	W56	**.3318ES1RFDW56-S**	**$284**	R1	22	1.15	3.00	61.0	11.500	115/230	4;9
0.5	0.37	3600	W56	**.5036ES1BOLW56-S**	**$316**	F1	24	1.15	3.50	60.0	11.500	115/208-230	4;9
		1800	W56	**.5018ES1RFDW56-S**	**$308**	R1	25	1.15	4.00	64.0	11.894	115/230	4;9
0.75	0.55	3600	56	**.7536ES1BOL56-S**	**$329**	F1	31	1.15	4.00	66.0	12.721	115/208-230	4;9
		1800	56	**.7518ES1RFD56-S**	**$357**	R1	34	1.15	5.30	68.5	13.114	115/230	4;9
1	0.75	3600	56	**00136ES1BOL56-S**	**$408**	F1	35	1.15	5.10	70.0	13.114	115/208-230	4;9
		1800	56	**00118ES1RFD56-S**	**$394**	R1	40	1.15	6.80	71.0	13.901	115/230	4;9
1.5	1.1	3600	56	**00156ES1BOL56-S**	**$463**	F1	39	1.15	6.60	75.0	13.902	115/208-230	4;9
		1800	56H	**00158ES1RFD56H-S**	**$502**	R1	51	1.15	7.50	77.0	15.083	115/230	4;9
2	1.5	3600	56H	**00236ES1BOL56-S**	**$592**	F1	44	1.15	8.70	77.0	14.295	115/208-230	4;9
		1800	56H	**00218ES1RFD56H-S**	**$529**	R1	56	1.15	10.0	78.5	15.870	115/230	4;9

Please refer to inside back cover for description of "NOTES"

For detailed specifications, data sheets, drawings and performance curves visit http://www.weg.net

Fractional Motors

SINGLE -PHASE

ODP - Foot Mount

HP	kW	RPM	Frame	Catalog Number	List Price	Mult. Symbol	Approx. Shipping Weight (lbs)	Service Factor	FL Amps @ High	FL. Eff (%)	"C" Dimension (in)	Voltage (V)	Notes
0.12	0.09	1800	48	.12180S1B48-S	$201	F1B	18	1.40	1.40	50.0	9.098	115/208-230	9
0.16	0.12	3600	48	.16360S1B48-S	$216	F1B	21	1.35	1.40	53.0	9.098	115/208-230	9
		1800	48	.16180S1B48-S	$208	F1B	22	1.35	1.70	53.0	9.098	115/208-230	9
0.25	0.18	3600	48	.25360T1B48-S	$253	F2B	19	1.35	1.30	66.6	9.492	115/208-230	9
		3600	W56	.25360T1BW56-S	$253	F2B	19	1.35	1.30	66.6	9.866	115/208-230	9
		1800	48	.25180T1B48-S	$241	F2B	18	1.35	1.60	68.5	9.492	115/208-230	9
		1800	W56	.25180T1BW56-S	$241	F2B	19	1.35	1.60	68.5	9.866	115/208-230	9
0.33	0.25	3600	48	.33360T1B48-S	$256	F2B	23	1.35	1.60	70.5	9.886	115/208-230	9
		3600	W56	.33360T1BW56-S	$257	F2B	23	1.35	1.60	70.5	10.260	115/208-230	9
		1800	48	.33180T1B48-S	$275	F2B	20	1.35	2.10	72.4	9.886	115/208-230	9
		1800	W56	.33180T1BW56-S	$275	F2B	21	1.35	2.10	72.4	10.260	115/208-230	9
0.5	0.37	3600	48	.50360T1B48-S	$276	F2B	23	1.25	2.40	72.4	9.886	115/208-230	9
		3600	W56	.50360S1BCDW56-S	$224	C1S	28	1.00	3.10	63.0	9.866	115/208-230	1;4;6;9
		3600	W56	.50360T1BW56-S	$282	F2B	24	1.25	2.40	72.4	10.260	115/208-230	9
		1800	48	.50180T1B48-S	$318	F2B	23	1.25	2.80	76.2	10.280	115/208-230	9
		1800	W56	.50180T1BW56-S	$307	F2B	23	1.25	2.80	76.2	10.654	115/208-230	9
0.75	0.55	3600	W56	.75360S1BCDW56-S	$237	C1S	22	1.00	4.30	68.5	10.260	115/208-230	1;4;6;9
		3600	56	.75360T1B56-S	$320	F2B	30	1.25	3.40	76.2	11.890	115/208-230	9
		1800	56	.75180T1B56-S	$387	F2B	38	1.25	3.40	81.8	11.890	115/208-230	9
1	0.75	3600	56	001360S1BCD56-S	$278	C1S	36	1.00	6.60	67.0	11.102	115/208-230	1;4;6;9
		3600	56	001360T1B56-S	$347	F2B	35	1.25	4.30	80.4	11.890	115/208-230	9
		1800	56	001180T1B56-S	$421	F2B	41	1.15	4.50	82.6	12.677	115/208-230	9
		1800	56	001180T1B056-S	$438	F2B	41	1.15	4.50	82.6	12.677	115/208-230	3;9
1.5	1.1	3600	56	001560S1BCD56-S	$311	C1S	40	1.00	8.70	68.0	11.496	115/208-230	1;4;6;9
		3600	56	001560T1B56-S	$393	F2B	38	1.15	6.20	81.5	12.284	115/208-230	9
		1800	56H	001580T1B56-S	$523	F2B	49	1.15	6.80	83.8	13.071	115/208-230	9
		1800	56H	001580T1B056-S	$541	F2B	50	1.15	6.80	83.8	13.465	115/208-230	3;9
2	1.5	3600	56H	002360S1BCD56-S	$372	C1S	34	1.00	8.90	70.0	11.890	115/208-230	1;4;6;9
		3600	56H	002360T1B56-S	$485	F2B	43	1.15	8.40	82.9	12.677	115/208-230	9
		1800	56H	002180T1B56-S	$626	F2B	54	1.15	9.30	84.5	13.465	115/208-230	9
3	2.2	3600	56H	003360S1CCD56-S	$432	C1S	41	1.00	12.7	80.0	12.677	208-230	1;4;6;9
		3600	56H	003360T1B56-S	$568	F2B	52	1.15	12.2	84.1	13.465	115/208-230	9
5	3.7	3600	56H	005360S1DCD56H-S	$458	C1S	53	1.00	20.3	80.0	13.465	230	1;4;6;9
		3600	56HZ	005360S1DCD56HZ-S	$481	C1S	53	1.00	20.3	80.0	13.533	230	1;4;5;6;9

Please refer to inside back cover for description of "NOTES"

For detailed specifications, data sheets, drawings and performance curves visit http:// www.weg.net

Data subject to change without notice.

ODP - Resilient Base

HP	kW	RPM	Frame	Catalog Number	List Price	Mult. Symbol	Approx. Shipping Weight (lbs)	Service Factor	FL Amps @ High	FL. Eff (%)	"C" Dimension (in)	Voltage (V)	Notes
0.16	0.12	1800	48Z	.16180S1ASPRB048Z-S	$272	F1B	21	1.35	3.00	50.5	10.138	115	3;9;13;16
		1800	48Z	.16180S1ASPRB48Z-S	$260	F1B	21	1.35	3.00	50.5	10.138	115	9;13;16
0.25	0.18	1800	48Z	.25180S1BSPRB048Z-S	$274	F1B	22	1.35	2.10	55.0	10.138	115/208-230	3;9;13;16
		1800	48Z	.25180S1ASPRB048Z-S	$274	F1B	22	1.35	4.30	55.0	10.138	115	3;9;13;16
		1800	48Z	.25180S1ASPRB48Z-S	$262	F1B	22	1.35	4.30	55.0	10.138	115	9;13;16
0.33	0.25	1800	48Z	.33180S1BSPRB048Z-S	$284	F1B	24	1.35	2.60	60.8	10.138	115/208-230	3;9;13;16
		1800	W56	.33180S1BSPRB0W56-S	$288	F1B	25	1.35	2.60	62.0	10.138	115/208-230	3;9;13;16
		1800	W56	.33180S1BSPRBW56-S	$276	F1B	25	1.35	2.60	62.0	10.138	115/208-230	9;13;16
		1800	48Z	.33180S1BSPRB48Z-S	$272	F1B	24	1.35	2.60	60.8	10.138	115/208-230	9;13;16
		1800	W56	.33180T1BRB0W56-S	$325	F2B	24	1.35	2.10	72.4	10.925	115/208-230	3;9;13
0.5	0.37	1800	48Z	.50180S1BSPRB048Z-S	$311	F1B	29	1.25	3.70	63.5	10.925	115/208-230	3;9;13;16
		1800	48Z	.50180S1BSPRB48Z-S	$299	F1B	29	1.25	3.70	63.5	10.925	115/208-230	9;13;16
		1800	W56	.50180S1BSPRB0W56-S	$316	F1B	30	1.25	3.70	63.5	10.945	115/208-230	3;9;13;16
		1800	W56	.50180S1BSPRBW56-S	$304	F1B	30	1.25	3.70	63.5	10.945	115/208-230	9;13;16
		1800	W56	.50180T1BRB0W56-S	$368	F2B	26	1.25	2.75	76.2	11.319	115/208-230	3;9;13
0.75	0.55	1800	56	.75180T1BRB056-S	$434	F2B	38	1.25	3.40	81.8	12.402	115/208-230	3;9;13
1	0.75	1800	56	001180T1BRB056-S	$468	F2B	43	1.15	4.50	82.6	13.189	115/208-230	3;9;13
1.5	1.1	3600	56	001560T1BRB056-S	$450	F2B	39	1.15	6.20	81.5	12.795	115/208-230	3;9;13
		1800	56H	001580T1BRB056-S	$570	F2B	50	1.15	6.80	83.8	13.583	115/208-230	3;9;13
2	1.5	1800	56H	002180T1BRB056H-S	$616	F2B	57	1.15	9.30	84.5	14.373	115/208-230	3;9;13

Please refer to inside back cover for description of "NOTES"

For detailed specifications, data sheets, drawings and performance curves visit http://www.weg.net

Fractional Motors

SINGLE -PHASE

ODP - C-Face - Foot Mount

HP	kW	RPM	Frame	Catalog Number	List Price	Mult. Symbol	Approx. Shipping Weight (lbs)	Service Factor	FL Amps @ High	FL. Eff (%)	"C" Dimension (in)	Voltage (V)	Notes
0.12	0.09	1800	48CH	.12180S1B48CH-S	$222	F1B	18	1.40	1.40	50.0	9.098	115/208-230	9
0.16	0.12	3600	48CH	.16360S1B48CH-S	$237	F1B	21	1.35	1.40	53.0	9.098	115/208-230	9
		1800	48CH	.16180S1B48CH-S	$231	F1B	22	1.35	1.70	53.0	9.098	115/208-230	9
0.25	0.18	3600	48CH	.25360T1B48CH-S	$277	F2B	19	1.35	1.30	66.6	9.492	115/208-230	9
		3600	W56C	.25360T1BW56C-S	$281	F2B	19	1.35	1.30	66.6	9.866	115/208-230	9
		1800	48CH	.25180T1B48CH-S	$269	F2B	18	1.35	1.60	68.5	9.492	115/208-230	9
		1800	W56C	.25180T1BW56C-S	$269	F2B	19	1.35	1.60	68.5	9.866	115/208-230	9
0.33	0.25	3600	48CH	.33360T1B48CH-S	$282	F2B	23	1.35	1.60	70.5	9.886	115/208-230	9
		3600	W56C	.33360T1BW56C-S	$285	F2B	23	1.35	1.60	70.5	10.260	115/208-230	9
		1800	48CH	.33180T1B48CH-S	$299	F2B	20	1.35	2.10	72.4	9.886	115/208-230	9
		1800	W56C	.33180T1BW56C-S	$303	F2B	21	1.35	2.10	72.4	10.260	115/208-230	9
0.5	0.37	3600	48CH	.50360T1B48CH-S	$300	F2B	23	1.25	2.40	72.4	9.886	115/208-230	9
		3600	W56C	.50360T1BW56C-S	$310	F2B	24	1.25	2.40	72.4	10.260	115/208-230	9
		1800	W56C	.50180T1BOW56C-S	$352	F2B	24	1.25	2.80	76.2	10.654	115/208-230	3;9
		1800	W56C	.50180T1BW56C-S	$335	F2B	24	1.25	2.80	76.2	10.654	115/208-230	9
0.75	0.55	3600	56C	.75360T1B56C-S	$348	F2B	30	1.25	3.40	76.2	11.890	115/208-230	9
		1800	56C	.75180T1B56C-S	$415	F2B	38	1.25	3.40	81.8	11.890	115/208-230	9
1	0.75	3600	56C	00136OT1B56C-S	$375	F2B	35	1.25	4.30	80.4	11.890	115/208-230	9
		1800	56C	00118OT1B56C-S	$449	F2B	41	1.15	4.50	82.6	12.677	115/208-230	9
1.5	1.1	3600	56C	00156OT1B56C-S	$421	F2B	38	1.15	6.20	81.5	12.284	115/208-230	9
		1800	56HC	00158OT1B56C-S	$551	F2B	49	1.15	6.80	83.8	13.071	115/208-230	9
2	1.5	3600	56HC	00236OT1B56C-S	$513	F2B	43	1.15	8.40	82.9	12.677	115/208-230	9
		1800	56HC	00218OT1B56C-S	$654	F2B	54	1.15	9.30	84.5	13.465	115/208-230	9
3	2.2	3600	56HC	00336OT1B56C-S	$596	F2B	52	1.15	12.2	84.1	13.465	115/208-230	9

Please refer to inside back cover for description of "NOTES"

For detailed specifications, data sheets, drawings and performance curves visit http:// www.weg.net

Data subject to change without notice.

ODP - C-Face - Footless

HP	kW	RPM	Frame	Catalog Number	List Price	Mult. Symbol	Approx. Shipping Weight (lbs)	Service Factor	FL Amps @ High	FL. Eff (%)	"C" Dimension (in)	Voltage (V)	Notes
0.25	0.18	1800	W56C	.25180T1BW56CFL-S	$269	F2B	18	1.35	1.60	68.5	9.866	115/208-230	9;20;51
0.33	0.25	3600	W56C	.33360T1BW56CFL-S	$285	F2B	23	1.35	1.60	70.5	10.260	115/208-230	9;20
		3600	W56C	.33360T1BOW56CFL-S	$302	F2B	23	1.35	1.60	70.5	10.260	115/208-230	3;9;20
		1800	W56C	.33180T1BW56CFL-S	$303	F2B	20	1.35	2.10	72.4	10.260	115/208-230	9;20
0.5	0.37	3600	W56C	.50360T1BOW56CFL-S	$327	F2B	23	1.25	2.40	72.4	10.260	115/208-230	3;9;20
		3600	W56C	.50360T1BW56CFL-S	$310	F2B	23	1.25	2.40	72.4	10.260	115/208-230	9;20
		1800	W56C	.50180T1BW56CFL-S	$335	F2B	23	1.25	2.80	76.2	10.654	115/208-230	9;20
0.75	0.55	3600	56C	.75360T1BO56CFL-S	$365	F2B	29	1.25	3.40	76.2	11.890	115/208-230	3;9;20
		3600	56C	.75360T1B56CFL-S	$348	F2B	29	1.25	3.40	76.2	11.890	115/208-230	9;20
		1800	56C	.75180T1B56CFL-S	$415	F2B	38	1.25	3.40	81.8	11.890	115/208-230	9;20
1	0.75	3600	56C	00136OT1B56CFL-S	$375	F2B	35	1.25	4.30	80.4	11.890	115/208-230	9;20
		3600	56C	00136OT1BO56CFL-S	$392	F2B	35	1.25	4.30	80.4	11.890	115/208-230	3;9;20
		1800	56C	00118OT1B56CFL-S	$449	F2B	41	1.15	4.50	82.6	12.677	115/208-230	9;20
1.5	1.1	3600	56C	00156OT1B56CFL-S	$421	F2B	38	1.15	6.20	81.5	12.284	115/208-230	9;20
		3600	56C	00156OT1BO56CFL-S	$438	F2B	38	1.15	6.20	81.5	12.284	115/208-230	3;9;20;51
		1800	56C	00158OT1B56CFL-S	$551	F2B	48	1.15	6.80	83.8	13.071	115/208-230	9;20
2	1.5	3600	56C	00236OT1B56CFL-S	$513	F2B	43	1.15	8.40	82.9	12.677	115/208-230	9;20
		3600	56C	00236OT1BO56CFL-S	$530	F2B	43	1.15	8.40	82.9	12.677	115/208-230	3;9;20;51
		1800	56C	00218OT1B56CFL-S	$654	F2B	54	1.15	9.30	84.5	13.465	115/208-230	9;20
3	2.2	3600	56C	00336OT1BO56CFL-S	$613	F2B	51	1.15	12.2	84.1	13.465	115/208-230	3;9;20
		3600	56C	00336OT1B56CFL-S	$596	F2B	51	1.15	12.2	84.1	13.465	115/208-230	9;20

ODP - Foot Mount - Thermally Protected

HP	kW	RPM	Frame	Catalog Number	List Price	Mult. Symbol	Approx. Shipping Weight (lbs)	Service Factor	FL Amps @ High	FL. Eff (%)	"C" Dimension (in)	Voltage (V)	Notes
0.5	0.37	3600	W56	.50360S1BCDW56-S	$224	C1S	28	1.00	3.10	63.0	9.866	115/208-230	1;4;6;9
0.75	0.55	3600	W56	.75360S1BCDW56-S	$237	C1S	22	1.00	4.30	68.5	10.260	115/208-230	1;4;6;9
1	0.75	3600	56	00136OS1BCD56-S	$278	C1S	36	1.00	6.60	67.0	11.102	115/208-230	1;4;6;9
		1800	56	00118OT1BO56-S	$438	F2B	41	1.15	4.50	82.6	12.677	115/208-230	3;9
1.5	1.1	3600	56	00156OS1BCD56-S	$311	C1S	40	1.00	8.70	68.0	11.496	115/208-230	1;4;6;9
		1800	56H	00158OT1BO56-S	$541	F2B	50	1.15	6.80	83.8	13.465	115/208-230	3;9
2	1.5	3600	56H	00236OS1BCD56-S	$372	C1S	34	1.00	8.90	70.0	11.890	115/208-230	1;4;6;9
3	2.2	3600	56H	00336OS1CCD56-S	$432	C1S	41	1.00	12.7	80.0	12.677	208-230	1;4;6;9
5	3.7	3600	56H	00536OS1DCD56H-S	$458	C1S	53	1.00	20.3	80.0	13.465	230	1;4;6;9
		3600	56HZ	00536OS1DCD56HZ-S	$481	C1S	53	1.00	20.3	80.0	13.533	230	1;4;5;6;9

Please refer to inside back cover for description of "NOTES"

For detailed specifications, data sheets, drawings and performance curves visit http://www.weg.net

THREE -PHASE

TEFC - Foot Mount

HP	kW	RPM	Frame	Catalog Number	List Price	Mult. Symbol	Approx. Shipping Weight (lbs)	Service Factor	FL Amps @ High	FL. Eff (%)	"C" Dimension (in)	Voltage (V)	Notes
0.25	0.18	3600	56	.2536ES3E56-S	$237	F1	21	1.15	0.50	57.5	11.142	208-230/460	9
		1800	56	.2518ES3E56-S	$249	F1	23	1.15	0.50	70.0	11.142	208-230/460	9
0.33	0.25	3600	56	.3336ES3E56-S	$249	F1	22	1.15	0.60	62.0	11.142	208-230/460	9
		1800	56	.3318ES3E56-S	$253	F1	24	1.15	0.60	74.0	11.535	208-230/460	9
0.5	0.37	3600	56	.5036ES3E56-S	$258	F1	24	1.15	0.80	68.0	11.535	208-230/460	9
		1800	56	.5018ES3E56-S	$287	F1	26	1.15	0.90	77.0	11.535	208-230/460	9
		1800	56	.5018ES3H56-S	$288	F1	26	1.15	0.70	77.0	11.535	575	9
		1200	56	.5012ES3E56-S	$417	F1	31	1.15	1.00	72.0	12.323	208-230/460	9
0.75	0.55	3600	56	.7536ES3E56-S	$287	F1	25	1.15	1.10	72.0	11.535	208-230/460	9
		3600	56	.7536ES3H56-S	$288	F1	25	1.15	0.90	72.0	11.535	575	9
		1800	56	.7518ES3E56-S	$311	F1	28	1.15	1.20	78.5	11.929	208-230/460	9
		1200	56H	.7512ES3E56-S	$427	F1	34	1.15	1.30	75.5	12.716	208-230/460	9
1	0.75	3600	W56	00136ET3EW56-S	$392	F1	25	1.15	1.50	78.5	11.106	230/460	9
		3600	W56	00136ET3HW56-S	$392	F1	25	1.15	1.20	78.5	11.106	575	9
		1800	56	00118ET3E56-S	$379	F1	41	1.15	1.50	85.5	13.504	230/460	9
		1800	56	00118ET3H56-S	$379	F1	41	1.15	1.20	85.5	13.504	575	9
		1200	56H	00112ET3E56-S	$497	F1	42	1.15	1.60	82.5	13.504	230/460	9
1.5	1.1	3600	56	00156ET3E56-S	$433	F1	37	1.15	1.90	84.0	13.109	230/460	9
		1800	56H	00158ET3E56-S	$435	F1	44	1.15	2.00	86.5	13.504	230/460	9
2	1.5	3600	56H	00236ET3E56-S	$489	F1	44	1.15	2.50	85.5	13.898	230/460	9
		1800	56H	00218ET3E56-S	$478	F1	46	1.15	2.70	86.5	13.898	230/460	9
3	2.2	3600	56H	00336ET3E56-S	$578	F1	54	1.15	3.50	86.5	15.079	230/460	9

Please refer to inside back cover for description of "NOTES"

For detailed specifications, data sheets, drawings and performance curves visit http:// www.weg.net

Data subject to change without notice.

TEFC - C-Face - Foot Mount

HP	kW	RPM	Frame	Catalog Number	List Price	Mult. Symbol	Approx. Shipping Weight (lbs)	Service Factor	FL Amps @ High	FL. Eff (%)	"C" Dimension (in)	Voltage (V)	Notes
0.25	0.18	3600	56C	.2536ES3E56C-S	$258	F1	21	1.15	0.50	57.5	11.142	208-230/460	9
		1800	56C	.2518ES3E56C-S	$270	F1	23	1.15	0.50	70.0	11.142	208-230/460	9
		1800	56C	.2518ES3H56C-S	$270	F1	23	1.15	0.40	70.0	11.142	575	9
0.33	0.25	3600	56C	.3336ES3E56C-S	$270	F1	22	1.15	0.60	62.0	11.142	208-230/460	9
		3600	56C	.3336ES3H56C-S	$270	F1	22	1.15	0.50	62.0	11.142	575	9
		1800	56C	.3318ES3E56C-S	$274	F1	24	1.15	0.60	74.0	11.535	208-230/460	9
0.5	0.37	3600	56C	.5036ES3E56C-S	$282	F1	24	1.15	0.80	68.0	11.535	208-230/460	9
		3600	56C	.5036ES3H56C-S	$281	F1	24	1.15	0.70	68.0	11.535	575	9
		1800	56C	.5018ES3E56C-S	$311	F1	26	1.15	0.90	77.0	11.535	208-230/460	9
		1800	56C	.5018ES3H56C-S	$263	F1	26	1.15	0.70	77.0	11.535	575	9
		1200	56C	.5012ES3E56C-S	$440	F1	31	1.15	1.00	72.0	12.323	208-230/460	9
0.75	0.55	3600	56C	.7536ES3E56C-S	$311	F1	25	1.15	1.10	72.0	11.535	208-230/460	9
		3600	56C	.7536ES3H56C-S	$310	F1	25	1.15	0.90	72.0	11.535	575	9
		1800	56C	.7518ES3E56C-S	$332	F1	28	1.15	1.20	78.5	11.929	208-230/460	9
		1800	56C	.7518ES3H56C-S	$333	F1	28	1.15	1.00	78.5	11.929	575	9
		1200	56HC	.7512ES3E56C-S	$449	F1	34	1.15	1.30	75.5	12.716	208-230/460	9
1	0.75	3600	W56C	00136ET3EW56C-S	$420	F1	25	1.15	1.50	78.5	11.106	230/460	9
		3600	W56C	00136ET3HW56C-S	$420	F1	25	1.15	1.20	78.5	11.106	575	9
		1800	56C	00118ET3E56C-S	$407	F1	41	1.15	1.50	85.5	13.504	230/460	9
		1800	56C	00118ET3H56C-S	$407	F1	41	1.15	1.20	85.5	13.504	575	9
		1200	56HC	00112ET3E56C-S	$525	F1	42	1.15	1.60	82.5	13.504	230/460	9
1.5	1.1	3600	56C	00156ET3E56C-S	$461	F1	37	1.15	1.90	84.0	13.109	230/460	9
		3600	56C	00156ET3H56C-S	$461	F1	37	1.15	1.50	84.0	13.109	575	9
		1800	56HC	00158ET3E56C-S	$463	F1	44	1.15	2.00	86.5	13.504	230/460	9
		1800	56HC	00158ET3H56C-S	$463	F1	44	1.15	1.60	86.5	13.504	575	9
2	1.5	3600	56HC	00236ET3E56C-S	$517	F1	44	1.15	2.50	85.5	13.898	230/460	9
		3600	56HC	00236ET3H56C-S	$517	F1	44	1.15	2.00	85.5	13.898	575	9
		1800	56HC	00218ET3E56C-S	$506	F1	46	1.15	2.70	86.5	13.898	230/460	9
3	2.2	3600	56HC	00336ET3E56C-S	$606	F1	54	1.15	3.50	86.5	15.079	230/460	9
		3600	56HC	00336ET3H56C-S	$606	F1	54	1.15	2.80	86.5	15.079	575	9

Please refer to inside back cover for description of "NOTES"

For detailed specifications, data sheets, drawings and performance curves visit http:// www.weg.net

TEFC - C-Face - Footless

HP	kW	RPM	Frame	Catalog Number	List Price	Mult. Symbol	Approx. Shipping Weight (lbs)	Service Factor	FL Amps @ High	FL. Eff (%)	"C" Dimension (in)	Voltage (V)	Notes
0.33	0.25	3600	56C	.3336ES3E56CFL-S	$270	F1	22	1.15	0.60	62.0	11.142	208-230/460	9;20
		3600	56C	.3336ES3H56CFL-S	$270	F1	22	1.15	0.50	62.0	11.142	575	9;20
		1800	56C	.3318ES3E56CFL-S	$274	F1	24	1.15	0.60	74.0	11.535	208-230/460	9;20
0.5	0.37	3600	56C	.5036ES3E56CFL-S	$282	F1	24	1.15	0.80	68.0	11.535	208-230/460	9;20
		1800	56C	.5018ES3E56CFL-S	$311	F1	26	1.15	0.90	77.0	11.535	208-230/460	9;20
		1800	56C	.5018ES3H56CFL-S	$312	F1	26	1.15	0.70	77.0	11.535	575	9;20
		1200	56C	.5012ES3E56CFL-S	$440	F1	31	1.15	1.00	72.0	12.323	208-230/460	9;20
		1200	56C	.5012ES3H56CFL-S	$441	F1	31	1.15	0.80	72.0	12.323	575	9;20
0.75	0.55	3600	56C	.7536ES3E56CFL-S	$311	F1	25	1.15	1.10	72.0	11.535	208-230/460	9;20
		3600	56C	.7536ES3H56CFL-S	$312	F1	25	1.15	0.90	72.0	11.535	575	9;20
		1800	56C	.7518ES3E56CFL-S	$332	F1	28	1.15	1.20	78.5	11.929	208-230/460	9;20
		1800	56C	.7518ES3H56CFL-S	$333	F1	28	1.15	1.00	78.5	11.929	575	9;20
		1200	56C	.7512ES3E56CFL-S	$449	F1	34	1.15	1.30	75.5	12.716	208-230/460	9;20
		1200	56C	.7512ES3H56CFL-S	$450	F1	34	1.15	1.10	75.5	12.716	575	9;20
1	0.75	3600	W56C	00136ET3EW56CFL-S	$420	F1	25	1.15	1.50	78.5	11.106	230/460	9;20
		1800	56C	00118ET3E56CFL-S	$407	F1	41	1.15	1.50	85.5	13.504	230/460	9;20
		1800	56C	00118ET3H56CFL-S	$407	F1	41	1.15	1.20	85.5	13.504	575	9;20
		1200	56C	00112ET3E56CFL-S	$528	F1	42	1.15	1.60	82.5	13.504	230/460	9;20
		1200	56C	00112ET3H56CFL-S	$528	F1	42	1.15	1.30	82.5	13.504	575	9;20
1.5	1.1	3600	56C	00156ET3E56CFL-S	$461	F1	37	1.15	1.90	84.0	13.109	230/460	9;20
		1800	56C	00158ET3E56CFL-S	$463	F1	44	1.15	2.00	86.5	13.504	230/460	9;20
2	1.5	3600	56C	00236ET3E56CFL-S	$517	F1	44	1.15	2.50	85.5	13.898	230/460	9;20
		1800	56C	00218ET3E56CFL-S	$506	F1	46	1.15	2.70	86.5	13.898	230/460	9;20
3	2.2	3600	56C	00336ET3E56CFL-S	$606	F1	54	1.15	3.50	86.5	15.079	230/460	9;20
		3600	56C	00336ET3H56CFL-S	$606	F1	54	1.15	2.80	86.5	15.079	575	9;20

TEFC - Footless Mount - Explosion Proof

HP	kW	RPM	Frame	Catalog Number	List Price	Mult. Symbol	Approx. Shipping Weight (lbs)	Service Factor	FL Amps @ High	FL. Eff (%)	"C" Dimension (in)	Voltage (V)	Notes
0.5	0.37	3600	56J	.5036XS3EJPR56J	$810	XF	24	1.00	0.9	73.1	12.3	230/460	1;3;9;43;51
0.75	0.55	3600	56J	.7536XS3EJPR56J	$835	XF	25	1.00	1.2	77.1	12.3	230/460	1;3;9;45
1	0.75	3600	56J	00136XT3EJPR56J	$1,030	XF	27	1.00	1.6	77	12.43	230/460	1;3;9;47
1.5	1.1	3600	56J	00156XT3EJPR56J	$1,105	XF	30	1.00	2.1	84	13.3	230/460	1;3;9;49
2	1.5	3600	56J	00236XT3EJPR56J	$1,153	XF	35	1.00	2.7	85.5	13.3	230/460	1;3;9;51

Please refer to inside back cover for description of "NOTES"

For detailed specifications, data sheets, drawings and performance curves visit http:// www.weg.net

Data subject to change without notice.

ODP - Foot Mount

HP	kW	RPM	Frame	Catalog Number	List Price	Mult. Symbol	Approx. Shipping Weight (lbs)	Service Factor	FL Amps @ High	FL. Eff (%)	"C" Dimension (in)	Voltage (V)	Notes
0.25	0.18	3600	56	.25360T3E56-S	$231	F2B	19	1.35	0.46	65.6	10.315	230/460	9
		1800	48	.25180T3E48-S	$235	F2B	18	1.35	0.48	70.0	9.492	230/460	9
		1800	56	.25180T3E56-S	$235	F2B	19	1.35	0.53	69.5	9.921	230/460	9
		1200	56	.25120T3E56-S	$288	F2B	21	1.35	0.55	67.5	10.315	230/460	9
0.33	0.25	3600	56	.33360T3E56-S	$242	F2B	19	1.35	0.61	69.5	10.315	230/460	9
		1800	56	.33180T3E56-S	$256	F2B	20	1.35	0.67	73.4	10.315	230/460	9
		1800	56	.33180T3H56-S	$269	F2B	20	1.35	0.54	73.4	10.315	575	9
		1200	56	.33120T3E56-S	$333	F2B	22	1.35	0.70	71.4	10.315	230/460	9
0.5	0.37	3600	56	.50360T3E56-S	$258	F2B	20	1.25	0.81	73.4	10.315	230/460	9
		1800	56	.50180T3E56-S	$296	F2B	24	1.25	0.86	78.2	10.709	230/460	9
		1800	56	.50180T3H56-S	$311	F2B	24	1.25	0.69	78.2	10.709	575	9
		1200	56	.50120T3E56-S	$349	F2B	25	1.25	0.93	75.3	10.709	230/460	9
0.75	0.55	3600	56	.75360T3E56-S	$305	F2B	22	1.25	1.14	76.8	10.709	230/460	9
		1800	56	.75180T3E56-S	$330	F2B	27	1.25	1.15	81.1	11.102	230/460	9
		1800	56	.75180T3H56-S	$347	F2B	27	1.25	0.92	81.1	11.102	575	9
		1200	56H	.75120T3E56-S	$384	F2B	38	1.15	1.26	81.7	12.677	230/460	9
1	0.75	3600	56	001360T3E56-S	$355	F2B	23	1.25	1.51	77.0	10.709	230/460	9
		1800	56	001180T3E56-S	$350	F2B	30	1.15	1.57	83.5	11.495	230/460	9
		1200	56H	001120T3E56-S	$458	F2B	42	1.15	1.68	82.5	13.070	230/460	9
1.5	1.1	3600	56	001560T3E56-S	$380	F2B	30	1.15	1.85	84.0	11.889	230/460	9
		1800	56H	001580T3E56-S	$361	F2B	40	1.15	2.10	86.5	12.677	230/460	9
2	1.5	3600	56H	002360T3E56-S	$436	F2B	38	1.15	2.42	85.5	12.677	230/460	9
		1800	56H	002180T3E56-S	$371	F2B	40	1.15	2.69	86.5	12.677	230/460	9
3	2.2	3600	56H	003360T3E56-S	$485	F2B	42	1.15	3.59	85.5	13.070	230/460	9
		1800	56HZ	003180T3E56Z-S	$481	F2B	48	1.15	3.97	86.9	13.071	230/460	9

Please refer to inside back cover for description of "NOTES"

For detailed specifications, data sheets, drawings and performance curves visit http:// www.weg.net

Fractional Motors

THREE -PHASE

ODP - C-Face - Foot Mount

HP	kW	RPM	Frame	Catalog Number	List Price	Mult. Symbol	Approx. Shipping Weight (lbs)	Service Factor	FL Amps @ High	FL. Eff (%)	"C" Dimension (in)	Voltage (V)	Notes
0.25	0.18	3600	56C	.25360T3E56C-S	$259	F2B	19	1.35	0.46	65.6	10.315	230/460	9
		1800	56C	.25180T3E56C-S	$263	F2B	19	1.35	0.53	69.5	9.921	230/460	9
		1200	56C	.25120T3E56C-S	$316	F2B	21	1.35	0.55	67.5	10.315	230/460	9;51
0.33	0.25	3600	56C	.33360T3E56C-S	$270	F2B	19	1.35	0.61	69.5	10.315	230/460	9
		1800	56C	.33180T3E56C-S	$284	F2B	20	1.35	0.67	73.4	10.315	230/460	9
		1200	56C	.33120T3E56C-S	$361	F2B	22	1.35	0.70	71.4	10.315	230/460	9
0.5	0.37	3600	56C	.50360T3E56C-S	$286	F2B	20	1.25	0.81	73.4	10.315	230/460	9
		1800	56C	.50180T3E56C-S	$324	F2B	24	1.25	0.86	78.2	10.709	230/460	9
		1200	56C	.50120T3E56C-S	$377	F2B	25	1.25	0.93	75.3	10.709	230/460	9
0.75	0.55	3600	56C	.75360T3E56C-S	$333	F2B	22	1.25	1.14	76.8	10.709	230/460	9
		1800	56C	.75180T3E56C-S	$358	F2B	27	1.25	1.15	81.1	11.102	230/460	9
		1800	56C	.75180T3H56C-S	$358	F2B	27	1.25	0.92	81.1	11.102	575	9
		1200	56HC	.75120T3E56C-S	$412	F2B	38	1.15	1.26	81.7	12.677	230/460	9
1	0.75	3600	56C	001360T3E56C-S	$383	F2B	23	1.25	1.51	77.0	10.709	230/460	9
		1800	56C	001180T3E56C-S	$378	F2B	30	1.15	1.57	83.5	11.495	230/460	9
		1200	56HC	001120T3E56C-S	$486	F2B	42	1.15	1.68	82.5	13.070	230/460	9
1.5	1.1	3600	56C	001560T3E56C-S	$408	F2B	30	1.15	1.85	84.0	11.889	230/460	9
		1800	56HC	001580T3E56C-S	$389	F2B	40	1.15	2.10	86.5	12.677	230/460	9
2	1.5	3600	56HC	002360T3E56C-S	$464	F2B	38	1.15	2.42	85.5	12.677	230/460	9
		1800	56HC	002180T3E56C-S	$399	F2B	40	1.15	2.69	86.5	12.677	230/460	9
3	2.2	3600	56HC	003360T3E56C-S	$513	F2B	42	1.15	3.59	85.5	13.070	230/460	9

Please refer to inside back cover for description of "NOTES"

For detailed specifications, data sheets, drawings and performance curves visit http:// www.weg.net

Data subject to change without notice.

ODP - C-Face - Footless

HP	kW	RPM	Frame	Catalog Number	List Price	Mult. Symbol	Approx. Shipping Weight (lbs)	Service Factor	FL Amps @ High	FL. Eff (%)	"C" Dimension (in)	Voltage (V)	Notes
0.25	0.18	1800	56C	.25180T3E56CFL-S	$263	F2B	19	1.35	0.53	66.0	9.921	230/460	9;20
		1800	56C	.25180T3H56CFL-S	$263	F2B	19	1.35	0.42	69.5	9.921	575	9;20
0.33	0.25	3600	56C	.33360T3E56CFL-S	$270	F2B	19	1.35	0.61	69.5	10.315	230/460	9;20
		1800	56C	.33180T3E56CFL-S	$284	F2B	20	1.35	0.67	73.4	10.315	230/460	9;20
		1800	56C	.33180T3H56CFL-S	$284	F2B	20	1.35	0.54	73.4	10.315	575	9;20
0.5	0.37	3600	56C	.50360T3E56CFL-S	$286	F2B	20	1.25	0.81	73.4	10.315	230/460	9;20
		1800	56C	.50180T3E56CFL-S	$324	F2B	24	1.25	0.86	78.2	10.709	230/460	9;20
		1800	56C	.50180T3H56CFL-S	$324	F2B	24	1.25	0.69	78.2	10.709	575	9;20
0.75	0.55	3600	56C	.75360T3E56CFL-S	$333	F2B	22	1.25	1.14	76.8	10.709	230/460	9;20
		1800	56C	.75180T3E56CFL-S	$358	F2B	27	1.25	1.15	81.1	11.102	230/460	9;20
		1800	56C	.75180T3H56CFL-S	$358	F2B	27	1.25	0.92	81.1	11.102	575	9;20
1	0.75	3600	56C	00136OT3E56CFL-S	$383	F2B	23	1.25	1.51	77.0	10.709	230/460	9;20
		1800	56C	00118OT3E56CFL-S	$378	F2B	30	1.15	1.57	83.5	11.495	230/460	9;20
		1800	56C	00118OT3H56CFL-S	$378	F2B	30	1.15	1.26	83.5	11.495	575	9;20
1.5	1.1	3600	56C	00156OT3E56CFL-S	$408	F2B	30	1.15	1.85	84.0	11.889	230/460	9;20
		1800	56C	00158OT3E56CFL-S	$389	F2B	40	1.15	2.10	86.5	12.677	230/460	9;20
		1800	56C	00158OT3H56CFL-S	$389	F2B	40	1.15	1.68	86.5	12.677	575	9;20
2	1.5	3600	56C	00236OT3E56CFL-S	$464	F2B	38	1.15	2.42	85.5	12.677	230/460	9;20
		1800	56C	00218OT3E56CFL-S	$399	F2B	40	1.15	2.69	86.5	12.677	230/460	9;20
		1800	56C	00218OT3H56CFL-S	$399	F2B	40	1.15	2.15	86.5	12.677	575	9;20
3	2.2	3600	56C	00336OT3E56CFL-S	$513	F2B	42	1.15	3.59	85.5	13.070	230/460	9;20

ODP - Three-Phase - Resilient Base

HP	kW	RPM	Frame	Catalog Number	List Price	Mult. Symbol	Approx. Shipping Weight (lbs)	Service Factor	FL Amps @ High	FL. Eff (%)	"C" Dimension (in)	Voltage (V)	Notes
0.33	0.25	1800	56	.33180T3ERB56-S	$314	F2B	22	1.35	0.67	73.4	10.827	230/460	9;13
0.5	0.37	1800	56	.50180T3ERB56-S	$354	F2B	25	1.25	0.86	78.2	11.220	230/460	9;13
0.75	0.55	1800	56	.75180T3ERB56-S	$388	F2B	28	1.25	1.15	81.1	11.614	230/460	9;13
1	0.75	1800	56	00118OT3ERB56-S	$408	F2B	31	1.15	1.57	83.5	12.008	230/460	9;13
1.5	1.1	1800	56H	00158OT3ERB56-S	$419	F2B	42	1.15	2.10	86.5	13.189	230/460	9;13

Please refer to inside back cover for description of "NOTES"

For detailed specifications, data sheets, drawings and performance curves visit http:// www.weg.net

DC MOTORS

NEMA 56 PMDC Motors

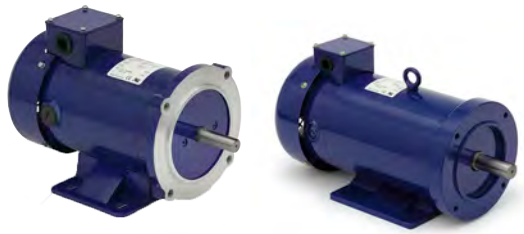

- UL recognized; Also CE and RoHs listed
- Replaceable brushes
- ¼ HP thru ½ HP ratings have a 4.45” frame/tube OD
- ¾ HP and 1.0 HP ratings have a 4.85” frame/tube OD
- Optional Low Voltage (12V or 24V), or TENV Enclosed

Catalog Number	HP	Voltage	Current (Amp)	Speed (RPM)	INSUL Class	Torque (In/lbs)	L Max (inches)	List Price	Mult. Symbol
MT-031	0.25	90	2.9	1750	F	9	9.63	**$516**	DC1
MT-041		180	1.39	1750	F	9	9.63	**$516**	DC1
MT-033	0.33	90	3.7	1750	F	12	9.63	**$563**	DC1
MT-042		180	1.85	1750	F	12	9.63	**$563**	DC1
MT-032	0.5	90	5.3	1750	F	18	10.24	**$644**	DC1
MT-043		180	2.78	1750	F	18	10.24	**$644**	DC1
MT-035	0.75	90	7.8	1750	F	27	11.67	**$791**	DC1
MT-044		180	3.9	1750	F	27	11.67	**$791**	DC1
MT-034	1	90	10.4	1750	F	36	13.05	**$930**	DC1
MT-037		180	5.2	1750	F	36	13.05	**$930**	DC1

NEMA 145TC PMDC Motors

- Optional 90V ratings for both 1.5 HP and 2.0 HP ratings

Catalog Number	HP	Voltage	Current (Amp)	Speed (RPM)	INSUL Class	Torque (In/lbs)	L Max (inches)	List Price	Mult. Symbol
MT-038	1.5	180	8	1750	F	54	15.6	**$1,151**	DC1
MT-039	2	180	9.5	1750	F	72	16.5	**$2,093**	DC1
MT-040	3	180	14	1750	F	108	18.7	**$2,930**	DC1

NEMA 56 Dimensions

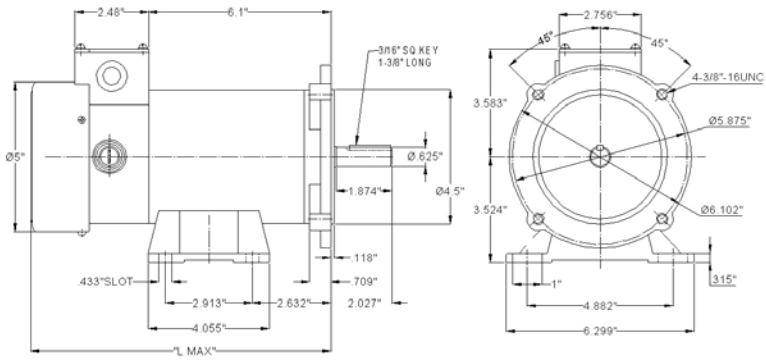

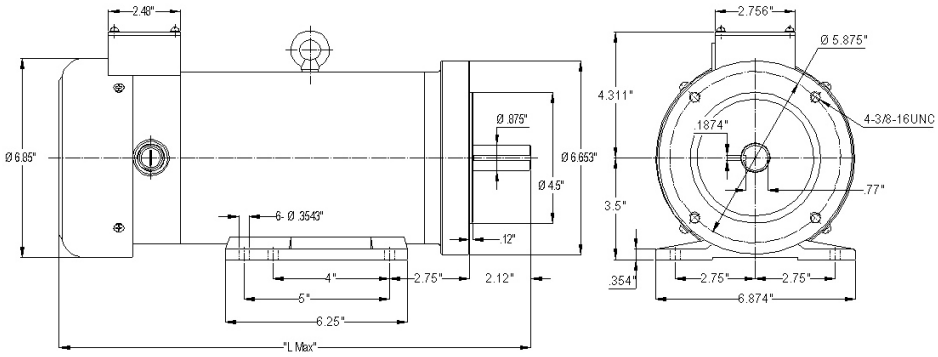

NEMA 145TC Dimensions

Data subject to change without notice.

Fractional Explosion Proof Motors

Features:

- Class F insulation
- 1.0 service factor
- Foot mount motors with and without C-flange
- Class I, Division 1 – Group C & D and Class II, Division 1 – Group E, F & G – T3B
- Thermally Protected
- 24" long leads for remote wiring
- Aluminum endshields
- Not rated for VFD

C UL US LISTED

UL File E312535

Features that make a difference:

- 50°C ambient temperature rating
- Three-Phase motors also rated for 50Hz
- Unassembled aluminum conduit box included

Please contact your authorized WEG distributor or go to **weg.net** for further information or additional specifications. **1-800-ASK-4WEG**

www.weg.net

EXPLOSION PROOF SINGLE PHASE

Foot Mount

HP	kW	RPM	Frame	Catalog Number	List Price	Mult. Symbol	Approx. Shipping Weight (lbs)	Service Factor	FL Amps @ High	FL. Eff (%)	"C" Dimension (in)	Voltage (V)	Notes
0.33	0.25	3600	56	**.3336XS1B56**	**$612**	XF	23	1.00	2.60	59.7	11.790	115/208-230	1;3;9;42
		1800	56	**.3318XS1B56**	**$670**	XF	25	1.00	3.00	60.4	11.790	115/208-230	1;3;9;42
0.5	0.37	3600	56	**.5036XS1B56**	**$636**	XF	26	1.00	3.40	66.7	12.040	115/208-230	1;3;9;42
		1800	56	**.5018XS1B56**	**$739**	XF	27	1.00	4.20	62.4	12.290	115/208-230	1;3;9;42
0.75	0.55	3600	56	**.7536XS1B56**	**$717**	XF	30	1.00	4.30	74.5	12.540	115/208-230	1;3;9;42
		1800	56	**.7518XS1B56**	**$868**	XF	34	1.00	4.52	70.8	13.040	115/208-230	1;3;9;42
1	0.75	3600	56	**00136XS1B56**	**$774**	XF	32	1.00	5.30	76.5	13.040	115/208-230	1;3;9;42
		1800	56	**00118XS1B56**	**$988**	XF	37	1.00	6.30	74.8	13.790	115/208-230	1;3;9;42
1.5	1.1	3600	56	**00156XS1C56**	**$1,121**	XF	38	1.00	7.80	80.0	14.040	208-230	1;3;9;42
		1800	56H	**00158XS1C56H**	**$1,324**	XF	48	1.00	7.80	80.0	15.420	208-230	1;3;9;42
2	1.5	3600	56H	**00236XS1C56H**	**$1,408**	XF	43	1.00	9.80	81.1	14.540	208-230	1;3;9;42

C-Face - Foot Mount

HP	kW	RPM	Frame	Catalog Number	List Price	Mult. Symbol	Approx. Shipping Weight (lbs)	Service Factor	FL Amps @ High	FL. Eff (%)	"C" Dimension (in)	Voltage (V)	Notes
0.33	0.25	3600	56C	**.3336XS1B56C**	**$737**	XF	23	1.00	2.60	59.7	11.790	115/208-230	1;3;9;42
		1800	56C	**.3318XS1B56C**	**$816**	XF	25	1.00	3.00	60.4	11.790	115/208-230	1;3;9;42
0.5	0.37	3600	56C	**.5036XS1B56C**	**$717**	XF	26	1.00	3.40	66.7	12.040	115/208-230	1;3;9;42
		1800	56C	**.5018XS1B56C**	**$817**	XF	27	1.00	4.20	62.4	12.290	115/208-230	1;3;9;42
0.75	0.55	3600	56C	**.7536XS1B56C**	**$773**	XF	30	1.00	4.30	74.5	12.540	115/208-230	1;3;9;42
		1800	56C	**.7518XS1B56C**	**$912**	XF	34	1.00	4.52	70.8	13.040	115/208-230	1;3;9;42
1	0.75	3600	56C	**00136XS1B56C**	**$814**	XF	32	1.00	5.30	76.5	13.040	115/208-230	1;3;9;42
		1800	56C	**00118XS1B56C**	**$1,036**	XF	37	1.00	6.30	74.8	13.790	115/208-230	1;3;9;42
1.5	1.1	3600	56C	**00156XS1C56C**	**$1,274**	XF	38	1.00	7.80	80.0	14.040	208-230	1;3;9;42
		1800	56HC	**00158XS1C56HC**	**$1,420**	XF	48	1.00	7.80	80.0	15.420	208-230	1;3;9;42
2	1.5	3600	56HC	**00236XS1C56HC**	**$1,457**	XF	43	1.00	9.80	81.1	14.540	208-230	1;3;9;42

Please refer to inside back cover for description of "NOTES"

For detailed specifications, data sheets, drawings and performance curves visit http:// www.weg.net

Data subject to change without notice.

C-Face - Footless

HP	kW	RPM	Frame	Catalog Number	List Price	Mult. Symbol	Approx. Shipping Weight (lbs)	Service Factor	FL Amps @ High	FL. Eff (%)	"C" Dimension (in)	Voltage (V)	Notes
0.33	0.24	1725	56	**.3318XS1B56CFL**	**$821**	XF	27.0	1.0	6	60.4	11.79	115/208-230	
		3450	56	**.3336XS1B56CFL**	**$759**	XF	23.0	1.0	5.2	59.7	11.79	115/208-230	
		3450	56	**.3336XS3E56CFL**	**$1,295**	XF	22.3	1.0	1.2	69.8	10.52	208-230/460	
0.5	0.37	1725	56	**.5018XS1B56CFL**	**$842**	XF	29.4	1.0	8.4	62.4	12.29	115/208-230	
		1725	56	**.5018XS3E56CFL**	**$954**	XF	29.0	1.0	1.7	79.1	11.92	208-230/460	
	0.29	3450	56	**.5036XS1B56CFL**	**$739**	XF	27.8	1.0	6.8	66.7	12.04	115/208-230	
	0.37	3450	56	**.5036XS3E56CFL**	**$882**	XF	26.4	1.0	3.2	73.1	13.66	208-230/460	
0.75	0.55	1725	56	**.7518XS1B56CFL**	**$939**	XF	34.1	1.0	10.4	70.8	13.29	115/208-230	
		1725	56	**.7518XS3E56CFL**	**$972**	XF	29.4	1.0	3.2	78.6	12.29	208-230/460	
		3450	56	**.7536XS1B56CFL**	**$796**	XF	20.9	1.0	8.6	74.5	12.54	115/208-230	
		3450	56	**.7536XS3E56CFL**	**$911**	XF	25.1	1.0	2.4	77.1	11.79	208-230/460	
1	0.74	1725	56	**00118XS1B56CFL**	**$1,067**	XF	39.8	1.0	12.6	74.8	13.79	115/208-230	
	0.75	1725	56	**00118XT3E56CFL**	**$1,037**	XF	39.8	1.0	3.2	85.5	13.66	208-230/460	
		3450	56	**00136XS1B56CFL**	**$838**	XF	34.4	1.0	10.8	76.5	13.04	115/208-230	
		3450	56	**00136XT3E56CFL**	**$952**	XF	27.6	1.0	3.2	77	11.92	208-230/460	
		3450	56	**00156XS1C56**	**$1,121**	XF	38.0	1.0	7.8	80	14.04	208-230	
1.5	1.10	3450	56	**00156XS1C56CFL**	**$1,312**	XF	38.0	1.0	7.8	80	14.04	208-230	
		3450	56	**00156XT3E56CFL**	**$1,069**	XF	30.0	1.0	3.6	84	12.79	190/380	
		1725	56	**00158XS1C56CFL**	**$1,463**	XF	49.6	1.0	7.8	80	15.42	208-230	
2	1.47	1725	56	**00218XT3E56CFL**	**$1,197**	XF	50.6	1.0	5.4	86.5	15.05	208-230/460	
		3450	56	**00236XS1C56CFL**	**$1,501**	XF	43.1	1.0	9.3	81.1	14.54	208-230	
		3450	56	**00236XS1C56H**	**$1,408**	XF	43.0	1.0	9.3	81.1	14.55	208-230	
		3600	56	**00236XT3E56CFL**	**$1,159**	XF	38.0	1.0	5.4	85.5	14.05	208-230/460	

Please refer to inside back cover for description of "NOTES"

For detailed specifications, data sheets, drawings and performance curves visit http://www.weg.net

Fractional Motors

EXPLOSION PROOF - THREE-PHASE

Foot Mount

HP	kW	RPM	Frame	Catalog Number	List Price	Mult. Symbol	Approx. Shipping Weight (lbs)	Service Factor	FL Amps @ High	FL. Eff (%)	"C" Dimension (in)	Voltage (V)	Notes
0.33	0.25	3600	56	.3336XS3E56	$650	XF	21	1.00	0.60	69.8	10.520	230/460	1;3;9;42
		1800	56	.3318XS3E56	$713	XF	23	1.00	0.60	76.7	10.520	230/460	1;3;9;17;42
0.5	0.37	3600	56	.5036XS3E56	$782	XF	24	1.00	0.90	73.1	11.790	230/460	1;3;9;42
		1800	56	.5018XS3E56	$741	XF	27	1.00	0.85	79.1	11.920	230/460	1;3;9;42
0.75	0.55	3600	56	.7536XS3E56	$815	XF	25	1.00	1.20	77.1	11.790	230/460	1;3;9;42
		1800	56	.7518XS3E56	$817	XF	28	1.00	1.40	78.6	12.290	230/460	1;3;9;42
1	0.75	3600	56	00136XT3E56	$858	XF	27	1.00	1.60	77.0	11.920	230/460	1;3;9;42
		1800	56	00118XT3E56	$922	XF	31	1.00	1.60	85.5	13.660	230/460	1;3;9;42
1.5	1.1	3600	56	00156XT3E56	$1,050	XF	30	1.00	2.10	84.0	12.780	230/460	1;3;9;42
		1800	56H	00158XT3E56H	$1,003	XF	41	1.00	2.10	86.5	14.540	230/460	1;3;9;42
2	1.5	3600	56H	00236XT3E56H	$1,171	XF	35	1.00	2.70	85.5	14.040	230/460	1;3;9;42
		1800	56H	00218XT3E56H	$1,090	XF	48	1.00	2.70	86.5	15.040	230/460	1;3;9;42

C-Face - Foot Mount

HP	kW	RPM	Frame	Catalog Number	List Price	Mult. Symbol	Approx. Shipping Weight (lbs)	Service Factor	FL Amps @ High	FL. Eff (%)	"C" Dimension (in)	Voltage (V)	Notes
0.33	0.25	3600	56C	.3336XS3E56C	$821	XF	21	1.00	0.60	69.8	10.520	208-230/460	1;3;9;42
		1800	56C	.3318XS3E56C	$877	XF	23	1.00	0.60	76.7	10.520	208-230/460	1;3;9;17;42
0.5	0.37	3600	56C	.5036XS3E56C	$856	XF	24	1.00	0.90	73.1	11.790	208-230/460	1;3;9;42
		1800	56C	.5018XS3E56C	$926	XF	27	1.00	0.85	79.1	11.920	208-230/460	1;3;9;42
0.75	0.55	3600	56C	.7536XS3E56C	$884	XF	25	1.00	1.20	77.1	11.790	208-230/460	1;3;9;42
		1800	56C	.7518XS3E56C	$944	XF	28	1.00	1.40	78.6	12.290	208-230/460	1;3;9;42
1	0.75	3600	56C	00136XT3E56C	$924	XF	27	1.00	1.60	77.0	11.920	230/460	1;3;9;42
		1800	56C	00118XT3E56C	$1,007	XF	31	1.00	1.60	82.2	13.660	230/460	1;3;9;42
1.5	1.1	3600	56C	00156XT3E56C	$1,038	XF	30	1.00	2.10	84.0	12.780	230/460	1;3;9;42
		1800	56HC	00158XT3E56HC	$1,011	XF	41	1.00	2.10	86.5	14.540	230/460	1;3;9;42
2	1.5	3600	56HC	00236XT3E56HC	$1,125	XF	35	1.00	2.70	85.5	14.040	230/460	1;3;9;42
		1800	56HC	00218XT3E56HC	$1,162	XF	48	1.00	2.70	86.5	15.040	230/460	1;3;9;42

Please refer to inside back cover for description of "NOTES"

For detailed specifications, data sheets, drawings and performance curves visit http:// www.weg.net

Data subject to change without notice.

COMMERCIAL HVAC MOTORS

TEFC – Single-Phase – Foot Mount A-189
TEAO – Single-Phase – Foot Mount. A-189
TEAO – Single-Phase – Resilient Base A-189
ODP – Single-Phase – Foot Mount A-190
ODP – Single-Phase – Resilient Base A-191
ODP – Three-Phase – Resilient Base. A-192
ODP – Single-Phase – Evaporative Cooler. A-192
Yoke Motors A-192

HVAC MOTORS - WITH INTERNAL AEGIS® SGR

TEFC – Three-Phase – Foot Mount A-193
ODP – Three-Phase – Foot Mount. A-198

COOLING TOWER MOTORS – THREE-PHASE

TEFC – Three-Phase – Foot Mount – NEMA Premium®. A-202
TEAO – Three-Phase – Foot Mount – NEMA Premium® A-205
TEFC – Three-Phase – Dual Speed (1 & 2 Windings) – High Efficiency A-207

PAD MOUNT MOTORS – Three-Phase

TEAO – NEMA Premium® A-211

Air Handling Motors

COMMERCIAL HVAC MOTORS

TEFC and ODP – Single Phase

High Starting Torque makes these motors ideal for a wide range of applications.

Standard Features:

- Ball bearings
- Class F insulation

TEFC

Resilient Base

ODP

Features that make a difference:

- High Starting Torque
- TEFC motors are rated IP55 (gasketed conduit box and capacitor cover)

AEGIS SGR BEARING PROTECTION RING
AEGIS INSTALLED
Patented Technology

TEFC and ODP – Three Phase

Features that make a difference:

- New ventilation system for improved thermal performance
- Robust feet design suitable for tougher applications
- New and more robust eyebolts design (frames 182/4T and up) plus a second eyebolt on non-drive end allowing vertical lifting capability (frames 213/5T and 254/6T)
- Oversized diagonally split aluminum terminal box that exceeds IP55 requirements
- Terminal box rotatable in 90 degrees increments for flexibility during installation
- Color coded leads as standard for easy wiring - (rolled steel only)
- Regreasable ball bearings on 254/6T frame as standard (optional for 182/4T and 213/5T)
- IP55 Ingress Protection as standard, being appropriate for severe environments - (TEFC only)
- Bearing cap as standard on flanged motors, optional on non flanged
- Suitable for VFD operation as per NEMA MG1 part 31.4.4.2
- Motor frame painting system 500 hours salt spray resistant

Please refer to inside back cover for description of "NOTES"

For detailed specifications, data sheets, drawings and performance curves visit http:// www.weg.net

Data subject to change without notice.

TEFC - Single-Phase - Foot Mount

HP	kW	RPM	Frame	Catalog Number	List Price	Mult. Symbol	Approx. Shipping Weight (lbs)	Service Factor	FL Amps @ High	FL. Eff (%)	"C" Dimension (in)	Voltage (V)	Notes
0.25	0.18	3600	W56	**.2536ES1BW56-S**	**$257**	F1	20	1.15	2.10	50.0	10.713	115/208-230	9
		1800	W56	**.2518ES1BW56-S**	**$267**	F1	20	1.15	2.30	57.0	11.106	115/208-230	9
0.33	0.25	3600	W56	**.3336ES1BW56-S**	**$267**	F1	23	1.15	2.60	54.0	11.106	115/208-230	9
		1800	W56	**.3318ES1BW56-S**	**$283**	F1	22	1.15	3.00	61.0	11.500	115/208-230	9
0.5	0.37	3600	W56	**.5036ES1BW56-S**	**$284**	F1	24	1.15	3.50	60.0	11.500	115/208-230	9
		3600	W56	**.5036ES1BOLW56-S**	**$316**	F1	24	1.15	3.50	60.0	11.500	115/208-230	4;9
		1800	W56	**.5018ES1BW56-S**	**$312**	F1	24	1.15	4.00	64.0	11.894	115/208-230	9
		1200	W56	**.5012ES1B56-S**	**$512**	F1	38	1.15	3.20	71.0	13.508	115/208-230	9
0.75	0.55	3600	56	**.7536ES1BOL56-S**	**$329**	F1	31	1.15	4.00	66.0	12.721	115/208-230	4;9
		3600	56	**.7536ES1B56-S**	**$297**	F1	31	1.15	4.00	66.0	12.721	115/208-230	9
		1800	56	**.7518ES1B56-S**	**$348**	F1	33	1.15	5.30	68.5	13.114	115/208-230	9
		1200	56H	**.7512ES1B56-S**	**$648**	F1	44	1.15	4.70	70.0	14.295	115/208-230	9
1	0.75	3600	56	**00136ES1BOL56-S**	**$408**	F1	35	1.15	5.10	70.0	13.114	115/208-230	4;9
		3600	56	**00136ES1B56-S**	**$376**	F1	34	1.15	5.10	70.0	13.114	115/208-230	9
		1800	56	**00118ES1B56-S**	**$401**	F1	39	1.15	6.80	71.0	13.902	115/208-230	9
1.5	1.1	3600	56	**00156ES1B56-S**	**$432**	F1	39	1.15	6.60	75.0	13.902	115/208-230	9
		3600	56	**00156ES1BOL56-S**	**$463**	F1	39	1.15	6.60	75.0	13.902	115/208-230	4;9
		1800	56H	**00158ES1B56-S**	**$456**	F1	40	1.15	7.50	77.0	15.083	115/208-230	9
2	1.5	3600	56H	**00236ES1BOL56-S**	**$592**	F1	44	1.15	8.70	77.0	14.295	115/208-230	4;9
		3600	56H	**00236ES1B56-S**	**$561**	F1	44	1.15	8.70	77.0	14.295	115/208-230	9

TEAO – Single-Phase – Foot Mount

HP	kW	RPM	Frame	Catalog Number	List Price	Mult. Symbol	Approx. Shipping Weight (lbs)	Service Factor	FL Amps @ High	FL. Eff (%)	"C" Dimension (in)	Voltage (V)	Notes
0.33	0.25	1800	48	**.3318AS1BPF48-S**	**$311**	G1	22	1.25	2.76	61.5	10.157	115/208-230	3;9;16
0.5	0.37	1800	W56	**.5018AS1BPFW56-S**	**$336**	G1	27	1.25	4.20	65.0	11.102	115/208-230	3;9;16
0.75	0.55	1800	56	**.7518AS1BPF56-S**	**$385**	G1	26	1.25	5.30	68.5	11.496	115/208-230	3;9
1	0.75	1800	56	**00118AS1BPF56-S**	**$410**	G1	35	1.15	7.00	72.0	12.992	115/208-230	3;9
	0.75	1800	56	**00118AS1BPFH56-S**	**$445**	G1	32	1.40	6.20	73.0	13.464	115/208-230	3;9
1.5	1.10	1800	56	**00158AS1BPF56-S**	**$458**	G1	33	1.15	7.48	77.0	13.464	115/208-230	3;9
	1.10	1800	56	**00158AS1BPFH56-S**	**$484**	G1	34	1.30	8.74	76.0	13.858	115/208-230	3;9
2	1.5	1800	143/5T	**00218AS1BPF145T-S**	**$548**	G1	54	1.15	10.0	78.5%	14.516	115/208-230	3;9

TEAO – Single-Phase – Resilient Base

HP	kW	RPM	Frame	Catalog Number	List Price	Mult. Symbol	Approx. Shipping Weight (lbs)	Service Factor	FL Amps @ High	FL. Eff (%)	"C" Dimension (in)	Voltage (V)	Notes
0.33	0.25	1800	48	**.3318AS1BRBPF48-S**	**$325**	G1	20	1.25	2.76	61.5	10.157	115/208-230	3;9;16
0.5	0.37	1800	W56	**.5018AS1BRBPFW56-S**	**$350**	G1	21	1.25	3.48	66.0	11.318	115/208-230	3;9;16
0.75	0.55	1800	56	**.7518AS1BRBPF56-S**	**$400**	G1	26	1.25	5.63	68.5	12.008	115/208-230	3;9
1	0.75	1800	56	**00118AS1BRBPF56-S**	**$435**	G1	35	1.15	7.00	72.0	12.992	115/208-230	3;9
1.5	1.10	1800	56	**00158AS1BRBPF56-S**	**$477**	G1	35	1.15	7.48	77	13.976	115/208-230	3;9

Please refer to inside back cover for description of "NOTES"

For detailed specifications, data sheets, drawings and performance curves visit http://www.weg.net

Air Handling Motors

COMMERCIAL HVAC MOTORS

ODP - Single-Phase - Foot Mount

HP	kW	RPM	Frame	Catalog Number	List Price	Mult. Symbol	Approx. Shipping Weight (lbs)	Service Factor	FL Amps @ High	FL. Eff (%)	"C" Dimension (in)	Voltage (V)	Notes
0.12	0.09	1800	48	.12180S1B48-S	$201	F1B	18	1.40	1.40	50.0	9.098	115/208-230	9
0.16	0.12	3600	48	.16360S1B48-S	$216	F1B	21	1.35	1.40	53.0	9.098	115/208-230	9
		1800	48	.16180S1B48-S	$208	F1B	22	1.35	1.70	53.0	9.098	115/208-230	9
0.25	0.18	3600	48	.25360T1B48-S	$253	F2B	19	1.35	1.30	66.6	9.492	115/208-230	9
		3600	W56	.25360T1BW56-S	$253	F2B	19	1.35	1.30	66.6	9.866	115/208-230	9
		1800	48	.25180T1B48-S	$241	F2B	18	1.35	1.60	68.5	9.492	115/208-230	9
		1800	W56	.25180T1BW56-S	$241	F2B	19	1.35	1.60	68.5	9.866	115/208-230	9
0.33	0.25	3600	48	.33360T1B48-S	$256	F2B	23	1.35	1.60	70.5	9.886	115/208-230	9
		3600	W56	.33360T1BW56-S	$257	F2B	23	1.35	1.60	70.5	10.260	115/208-230	9
		1800	48	.33180T1B48-S	$275	F2B	20	1.35	2.10	72.4	9.886	115/208-230	9
		1800	W56	.33180T1BW56-S	$275	F2B	21	1.35	2.10	72.4	10.260	115/208-230	9
0.5	0.37	3600	48	.50360T1B48-S	$276	F2B	23	1.25	2.40	72.4	9.886	115/208-230	9
		3600	W56	.50360T1BW56-S	$282	F2B	24	1.25	2.40	72.4	10.260	115/208-230	9
		1800	48	.50180T1B48-S	$318	F2B	23	1.25	2.80	76.2	10.280	115/208-230	9
		1800	W56	.50180T1BW56-S	$307	F2B	23	1.25	2.80	76.2	10.654	115/208-230	9
0.75	0.55	3600	56	.75360T1B56-S	$320	F2B	30	1.25	3.40	76.2	11.890	115/208-230	9
		1800	56	.75180T1B56-S	$387	F2B	38	1.25	3.40	81.8	11.890	115/208-230	9
1	0.75	3600	56	001360T1B56-S	$347	F2B	35	1.25	4.30	80.4	11.890	115/208-230	9
		1800	56	001180T1B56-S	$421	F2B	41	1.15	4.50	82.6	12.677	115/208-230	9
		1800	56	001180T1B056-S	$438	F2B	41	1.15	4.50	82.6	12.677	115/208-230	3;9
1.5	1.1	3600	56	001560T1B56-S	$393	F2B	38	1.15	6.20	81.5	12.284	115/208-230	9
		1800	56H	001580T1B56-S	$523	F2B	49	1.15	6.80	83.8	13.071	115/208-230	9
		1800	56H	001580T1B056-S	$541	F2B	50	1.15	6.80	83.8	13.465	115/208-230	3;9
2	1.5	3600	56H	002360T1B56-S	$485	F2B	43	1.15	8.40	82.9	12.677	115/208-230	9
		1800	56H	002180T1B56-S	$626	F2B	54	1.15	9.30	84.5	13.465	115/208-230	9
3	2.2	3600	56H	003360T1B56-S	$568	F2B	52	1.15	12.2	84.1	13.465	115/208-230	9

Please refer to inside back cover for description of "NOTES"

For detailed specifications, data sheets, drawings and performance curves visit http:// www.weg.net

Data subject to change without notice.

ODP - Single-Phase - Resilient Base

HP	kW	RPM	Frame	Catalog Number	List Price	Mult. Symbol	Approx. Shipping Weight (lbs)	Service Factor	FL Amps @ High	FL. Eff (%)	"C" Dimension (in)	Voltage (V)	Notes
0.16	0.12	1800	48Z	.16180S1ASPRB048Z-S	$272	F1B	21	1.35	3.00	50.5	10.138	115	3;9;13;16
		1800	48Z	.16180S1ASPRB48Z-S	$260	F1B	21	1.35	3.00	50.5	10.138	115	9;13;16
0.25	0.18	1800	48Z	.25180S1BSPRB048Z-S	$274	F1B	22	1.35	2.10	55.0	10.138	115/208-230	3;9;13;16
		1800	48Z	.25180S1ASPRB048Z-S	$274	F1B	22	1.35	4.30	55.0	10.138	115	3;9;13;16
		1800	48Z	.25180S1ASPRB48Z-S	$262	F1B	22	1.35	4.30	55.0	10.138	115	9;13;16
		1800	W56	.25180S1BRBFB0W56-S	$283	F1B	18	1.35	2.30	57.0	10.138	115/208-230	3;9;13;42
		1800	W56	.25180S1BRBFBW56-S	$271	F1B	18	1.35	2.30	57.0	10.138	115/208-230	9;13;42
0.33	0.25	1800	48Z	.33180S1BSPRB048Z-S	$284	F1B	24	1.35	2.60	60.8	10.138	115/208-230	3;9;13;16
		1800	48Z	.33180S1BSPRB48Z-S	$272	F1B	24	1.35	2.60	60.8	10.138	115/208-230	9;13;16
		1800	W56	.33180S1BSPRB0W56-S	$288	F1B	25	1.35	2.60	62.0	10.138	115/208-230	3;9;13;16
		1800	W56	.33180S1BSPRBW56-S	$276	F1B	25	1.35	2.60	62.0	10.138	115/208-230	9;13;16
		1800	W56	.33180S1BRBFBW56-S	$281	F1B	20	1.35	3.10	60.0	10.531	115/208-230	9;13;42
		1800	W56	.33180S1BRBFB0W56-S	$293	F1B	20	1.35	3.10	60.0	10.531	115/208-230	3;9;13;42
		1800	W56	.33180T1BRB0W56-S	$325	F2B	24	1.35	2.10	72.4	10.925	115/208-230	3;9;13
0.5	0.37	1800	48Z	.50180S1BSPRB048Z-S	$311	F1B	29	1.25	3.70	63.5	10.925	115/208-230	3;9;13;16
		1800	48Z	.50180S1BSPRB48Z-S	$299	F1B	29	1.25	3.70	63.5	10.925	115/208-230	9;13;16
		1800	W56	.50180S1BRBFB0W56-S	$325	F1B	21	1.25	4.10	63.0	10.925	115/208-230	3;9;13;42
		1800	W56	.50180S1BRBFBW56-S	$313	F1B	21	1.25	4.10	63.0	10.925	115/208-230	9;13;42
		1800	W56	.50180S1BSPRB0W56-S	$316	F1B	30	1.25	3.70	63.5	10.945	115/208-230	3;9;13;16
		1800	W56	.50180S1BSPRBW56-S	$304	F1B	30	1.25	3.70	63.5	10.945	115/208-230	9;13;16
		1800	W56	.50180T1BRB0W56-S	$368	F2B	26	1.25	2.75	76.2	11.319	115/208-230	3;9;13
0.75	0.55	1800	W56	.75180S1BRBFB0W56-S	$379	F1B	23	1.25	5.30	69.0	12.008	115/208-230	3;9;13;42
		1800	W56	.75180S1BRBFBW56-S	$367	F1B	23	1.25	5.30	69.0	12.008	115/208-230	9;13;42
		1800	56	.75180T1BRB056-S	$434	F2B	38	1.25	3.40	81.8	12.402	115/208-230	3;9;13
1	0.75	1800	W56	00118OS1BRBFB056-S	$408	F1B	25	1.15	6.80	71.0	12.402	115/208-230	3;9;13;42
		1800	W56	00118OS1BRBFBW56-S	$396	F1B	25	1.15	6.80	71.0	12.402	115/208-230	9;13;42
		1800	56	00118OT1BRB056-S	$468	F2B	43	1.15	4.50	82.6	13.189	115/208-230	3;9;13
1.5	1.1	3600	56	00156OT1BRB056-S	$450	F2B	39	1.15	6.20	81.5	12.795	115/208-230	3;9;13
		1800	56H	00158OT1BRB056-S	$570	F2B	50	1.15	6.80	83.8	13.583	115/208-230	3;9;13
2	1.5	1800	56H	00218OT1BRB056H-S	$616	F2B	57	1.15	9.30	84.5	14.373	115/208-230	3;9;13

Please refer to inside back cover for description of "NOTES"

For detailed specifications, data sheets, drawings and performance curves visit http:// www.weg.net

Air Handling Motors

COMMERCIAL HVAC MOTORS

ODP - Three-Phase - Resilient Base

HP	kW	RPM	Frame	Catalog Number	List Price	Mult. Symbol	Approx. Shipping Weight (lbs)	Service Factor	FL Amps @ High	FL. Eff (%)	"C" Dimension (in)	Voltage (V)	Notes
0.33	0.25	1800	56	.33180T3ERB56-S	$314	F2B	22	1.35	0.67	73.4	10.827	230/460	9;13
0.5	0.37	1800	56	.50180T3ERB56-S	$354	F2B	25	1.25	0.86	78.2	11.220	230/460	9;13
0.75	0.55	1800	56	.75180T3ERB56-S	$388	F2B	28	1.25	1.15	81.1	11.614	230/460	9;13
1	0.75	1800	56	001180T3ERB56-S	$408	F2B	31	1.15	1.57	83.5	12.008	230/460	9;13
1.5	1.1	1800	56H	001580T3ERB56-S	$419	F2B	42	1.15	2.10	86.5	13.189	230/460	9;13

ODP - Single-Phase - Evaporative Cooler

HP	kW	RPM	Frame	Catalog Number	List Price	Mult. Symbol	Approx. Shipping Weight (lbs)	Service Factor	FL Amps @ High	FL. Eff (%)	"C" Dimension (in)	Voltage (V)	Notes
0.33	0.25	1800	56	.33180S1AEC56	$156	F1B	19	1.00	6.60	49.8	9.530	115	1;3;9;16
0.33/0.11	0.25/0.08	1800/1200	56	.33820S1AEC56	$188	F1B	21	1.00	6.60/3.70	49.8/33.6	9.530	115	1;3;9;16,51
0.5	0.37	1800	56	.50180S1AEC56	$164	F1B	21	1.00	8.20	58.0	9.530	115	1;3;9;16
		1800	56	.50180S1DEC56	$166	F1B	21	1.00	4.80	54.0	9.530	240	1;3;9;16
0.5/0.16	0.37/0.12	1800/1200	56	.50820S1AEC56	$199	F1B	24	1.00	8.20/4.60	58.0/42.4	9.530	115	1;3;9
		1800/1200	56	.50820S1DEC56	$220	F1B	24	1.00	4.80/2.10	54.0/39.6	9.530	240	1;3;9
0.75	0.55	1800	56	.75180S1AEC56	$201	F1B	24	1.00	10.40	61.9	9.530	115	1;3;9
		1800	56	.75180S1DEC56	$201	F1B	28	1.00	5.50	59.2	9.530	240	1;3;9
0.75/0.25	0.55/0.18	1800/1200	56	.75820S1AEC56	$251	F1B	26	1.00	10.4/5.50	61.9/42.8	9.530	115	1;3;9
		1800/1200	56	.75820S1DEC56	$267	F1B	27	1.00	5.50/2.60	59.0/47.4	9.530	240	1;3;9
1/0.33	0.75/0.25	1800/1200	56	001820S1AEC56	$364	F1B	32	1.00	12.1/7.10	65.1/49.1	10.960	115	1;3;9
		1800/1200	56	001820S1DEC56	$389	F1B	33	1.00	6.45/3.06	66.7/51.1	10.960	240	1;3;9

Yoke Motors

Standard Features:

- Lightweight Design
- Ball Bearings (Lubed for Life)
- Permanent Split Capacitor (start-up with no switch)
- Quiet & Powerful Performance
- Sturdy Yoke Mount
- Terminal Block for Easy Wiring
- Automatic Overload protection
- Dual Voltage compatibility
- Extended Thru bolts (10x32 UNF - 5.188 BC)
- Two-speed operation: Connect motor for 230V arrangement, feed with 115V for approx. 70% of rated speed.

HP	kW	RPM	Frame	Catalog Number	List Price	Mult. Symbol	Approx. Shipping Weight (lbs)	Service Factor	FL Amps @ High	FL. Eff (%)	"C" Dimension (in)	Voltage (V)	Notes
0.25	0.18	1800	48	.2518AS1RYM48Y-S	200	G1	9	1	1.30	64.00	9.7	115/230	
		1200	48	.2512AS1RYM48Y-S	205	G1	17	1	1.50	60.00	9.7	115/230	
0.33	0.25	1800	48	.3318AS1RYM48Y-S	215	G1	18	1	1.80	65.20	10.3	115/230	
		1200	48	.3312AS1RYM48Y-S	220	G1	19	1	1.75	61.00	9.7	115/230	
0.5	0.37	1800	48	.5018AS1RYM48Y-S	218	G1	16	1	2.40	68.00	10.5	115/230	
0.33	0.25	1200	48	.5012AS1RYM48Y-S	225	G1	20	1	3.10	66.00	10.7	115/230	

Please refer to inside back cover for description of "NOTES"

For detailed specifications, data sheets, drawings and performance curves visit http:// www.weg.net

Data subject to change without notice.

TEFC - Three-Phase - Foot Mount and Foot Mount with C-Face

HP	kW	RPM	Frame	Catalog Number	List Price	Mult. Symbol	Approx. Shipping Weight (lbs)	Service Factor	FL Amps @ High	FL. Eff (%)	"C" Dimension (in)	Voltage (V)	Notes
1	0.75	3600	143/5T	00136ET3E143T-SG	$560	RSP	31	1.15	1.40	78.5	13.189	230/460	9;34
		3600	143/5T	00136ET3H143T-SG	$560	RSP	31	1.15	1.10	78.5	13.189	575	9;34
		3600	143/5T	00136ET3H143T-W22G	$678	N1	44	1.25	1.15	81.5	13.358	575	34
		3600	143/5T	00136ET3E143T-W22G	$678	N1	45	1.25	1.44	81.5	13.358	230/460	34
		1800	143/5T	00118ET3E143T-SG	$599	RSP	42	1.15	1.50	85.5	13.583	230/460	9;34
		1800	143/5T	00118ET3H143T-SG	$599	RSP	42	1.15	1.20	85.5	13.583	575	9;34
		1800	143/5T	00118ET3V143T-SG	$599	RSP	42	1.15	1.70	85.5	13.583	200/400	9;34
		1800	143/5T	00118ET3E143T-W22G	$667	N1	48	1.25	1.47	85.5	13.358	230/460	34
		1800	143/5T	00118ET3E143TC-W22G	$695	N1	50	1.25	1.47	85.5	13.358	230/460	34
		1800	143/5T	00118ET3H143T-W22G	$667	N1	48	1.25	1.18	85.5	13.358	575	34
		1200	143/5T	00112ET3E145T-SG	$669	RSP	43	1.15	1.60	82.5	13.583	230/460	9;34
		1200	143/5T	00112ET3H145T-SG	$669	RSP	43	1.15	1.30	82.5	13.583	575	9;34
		1200	143/5T	00112ET3H145T-W22G	$748	N1	55	1.25	1.38	82.5	13.358	575	34
		1200	143/5T	00112ET3E145T-W22G	$748	N1	55	1.25	1.73	82.5	13.358	230/460	34
1.5	1.1	3600	143/5T	00156ET3E143T-SG	$613	RSP	39	1.15	1.90	84.0	13.189	230/460	9;34
		3600	143/5T	00156ET3H143T-SG	$613	RSP	39	1.15	1.50	84.0	13.189	575	9;34
		3600	143/5T	00156ET3E143T-W22G	$683	N1	49	1.25	1.96	84.0	13.358	230/460	34
		3600	143/5T	00156ET3H143T-W22G	$683	N1	49	1.25	1.57	84.0	13.358	575	34
		1800	143/5T	00158ET3E145T-SG	$620	RSP	43	1.15	2.00	86.5	13.583	230/460	9;34
		1800	143/5T	00158ET3H145T-SG	$620	RSP	43	1.15	1.60	86.5	13.583	575	9;34
		1800	143/5T	00158ET3E145TC-W22G	$719	N1	56	1.25	2.02	86.5	13.358	230/460	34
		1800	143/5T	00158ET3E145T-W22G	$691	N1	53	1.25	2.02	86.5	13.358	230/460	34
		1800	143/5T	00158ET3V145T-SG	$620	RSP	43	1.15	2.30	86.5	13.583	200/400	9;34
		1800	143/5T	00158ET3H145T-W22G	$691	N1	53	1.25	1.62	86.5	13.358	575	34
		1200	182/4T	00152ET3E182T-SG	$826	RSP	76	1.15	2.20	87.5	16.339	230/460	9;34
		1200	182/4T	00152ET3H182T-SG	$826	RSP	76	1.15	1.80	87.5	16.339	575	9;34
		1200	182/4T	00152ET3H182T-W22G	$924	N1	97	1.25	2.03	87.5	15.860	575	34
		1200	182/4T	00152ET3E182T-W22G	$924	N1	97	1.25	2.54	87.5	15.860	230/460	34
2	1.5	3600	143/5T	00236ET3E145T-SG	$654	RSP	45	1.15	2.50	85.5	13.976	230/460	9;34
		3600	143/5T	00236ET3H145T-SG	$654	RSP	45	1.15	2.00	85.5	13.976	575	9;34
		3600	143/5T	00236ET3H145T-W22G	$731	N1	54	1.25	2.05	85.5	13.358	575	34
		3600	143/5T	00236ET3E145T-W22G	$731	N1	54	1.25	2.56	85.5	13.358	230/460	34
		1800	143/5T	00218ET3E145T-SG	$673	RSP	47	1.15	2.70	86.5	13.976	230/460	9;34
		1800	143/5T	00218ET3E145T-W22G	$708	N1	56	1.25	2.61	86.5	13.346	230/460	34
		1800	143/5T	00218ET3H145T-SG	$673	RSP	47	1.15	2.20	86.5	13.976	575	9;34
		1800	143/5T	00218ET3V145T-SG	$673	RSP	47	1.15	3.10	86.5	13.976	200/400	9;34
		1800	143/5T	00218ET3H145T-W22G	$752	N1	54	1.25	2.21	86.5	13.358	575	34
		1800	143/5T	00218ET3E145TC-W22G	$780	N1	53	1.25	2.76	86.5	13.358	230/460	34
		1200	182/4T	00212ET3E184T-SG	$883	RSP	86	1.15	3.00	88.5	17.126	230/460	9;34
		1200	182/4T	00212ET3H184T-SG	$883	RSP	86	1.15	2.40	88.5	17.126	575	9;34
		1200	182/4T	00212ET3H184T-W22G	$989	N1	103	1.25	2.58	88.5	15.860	575	34;39
		1200	182/4T	00212ET3E184T-W22G	$989	N1	108	1.25	3.22	88.5	15.860	230/460	34;39

continued on next page

Please refer to inside back cover for description of "NOTES"

For detailed specifications, data sheets, drawings and performance curves visit http://www.weg.net

HVAC MOTORS - WITH INTERNAL AEGIS® SGR

TEFC - Three-Phase - Foot Mount and Foot Mount with C-Face - *continued*

HP	kW	RPM	Frame	Catalog Number	List Price	Mult. Symbol	Approx. Shipping Weight (lbs)	Service Factor	FL Amps @ High	FL. Eff (%)	"C" Dimension (in)	Voltage (V)	Notes
3	2.2	3600	182/4T	00336ET3E182T-SG	$835	RSP	63	1.15	3.70	86.5	15.551	230/460	9;34
		3600	182/4T	00336ET3H182T-SG	$835	RSP	63	1.15	3.00	86.5	15.551	575	9;34
		3600	182/4T	00336ET3E182T-W22G	$933	N1	99	1.25	3.63	86.5	15.860	230/460	34
		3600	182/4T	00336ET3H182T-W22G	$933	N1	99	1.25	2.90	86.5	15.860	575	34
		1800	182/4T	00318ET3E182T-SG	$747	RSP	87	1.15	3.80	89.5	17.913	230/460	9;34
		1800	182/4TC	00318ET3E182TC-SG	$780	RSP	87	1.15	3.80	89.5	17.913	230/460	9;34;51
		1800	182/4T	00318ET3H182T-SG	$747	RSP	87	1.15	3.00	89.5	17.913	575	9;34
		1800	182/4T	00318ET3V182T-SG	$747	RSP	87	1.15	4.40	89.5	17.913	200/400	9;34
		1800	182/4T	00318ET3E182T-W22G	$833	N1	92	1.25	3.91	89.5	15.860	230/460	34
		1800	182/4T	00318ET3E182TC-W22G	$870	N1	96	1.25	3.91	89.5	15.860	230/460	34
		1800	182/4T	00318ET3H182T-W22G	$833	N1	94	1.25	3.13	89.5	15.860	575	34
		1200	213/5T	00312ET3E213T-SG	$1,183	RSP	134	1.15	4.20	89.5	19.291	230/460	9;34
		1200	213/5T	00312ET3H213T-SG	$1,183	RSP	134	1.15	3.40	89.5	19.291	575	9;34;51
		1200	213/5T	00312ET3E213T-W22G	$1,329	N1	160	1.25	4.41	89.5	19.517	230/460	34
		1200	213/5T	00312ET3H213T-W22G	$1,329	N1	163	1.25	3.53	89.5	19.517	575	34
5	3.7	3600	182/4T	00536ET3E184T-SG	$930	RSP	83	1.15	5.90	88.5	16.732	230/460	9;34
		3600	182/4TC	00536ET3E184TC-SG	$963	RSP	92	1.15	5.90	88.5	16.732	230/460	9;34;51
		3600	182/4T	00536ET3H184T-SG	$930	RSP	111	1.15	4.70	88.5	17.126	575	9;34
		3600	182/4T	00536ET3E184T-W22G	$1,043	N1	103	1.25	5.90	88.5	15.860	230/460	34
		3600	182/4T	00536ET3H184T-W22G	$1,043	N1	106	1.25	4.72	88.5	15.860	575	34
		1800	182/4T	00518ET3E184T-SG	$842	RSP	81	1.15	6.50	89.5	17.913	230/460	9;34
		1800	182/4TC	00518ET3E184TC-SG	$876	RSP	81	1.15	6.50	89.5	17.913	230/460	9;34;51
		1800	182/4T	00518ET3H184T-SG	$842	RSP	81	1.15	5.20	89.5	17.913	575	9;34
		1800	182/4T	00518ET3V184T-SG	$842	RSP	81	1.15	7.50	89.5	17.913	200/400	9;34
		1800	182/4T	00518ET3E184TC-W22G	$980	N1	107	1.25	6.45	89.5	15.860	230/460	34
		1800	182/4T	00518ET3H184T-W22G	$942	N1	104	1.25	5.16	89.5	15.860	575	34
		1200	213/5T	00512ET3E215T-SG	$1,360	RSP	153	1.15	6.70	89.5	20.079	230/460	9;34
		1200	213/5T	00512ET3H215T-SG	$1,360	RSP	153	1.15	5.40	89.5	20.079	575	9;34
7.5	5.5	3600	213/5T	00736ET3E213T-SRG	$1,298	RSP	143	1.15	8.67	89.5	18.897	230/460	9;34
		3600	213/5T	00736ET3E213T-SG	$1,180	RSP	124	1.15	8.70	89.5	18.897	230/460	9;34
		3600	213/5TC	00736ET3E213TC-SG	$1,225	RSP	134	1.15	8.70	89.5	18.897	230/460	9;34;51
		3600	213/5T	00736ET3H213T-SG	$1,180	RSP	143	1.15	7.00	89.5	18.898	575	9;34
		3600	213/5T	00736ET3E213T-W22G	$1,325	N1	149	1.25	8.76	89.5	19.517	230/460	34
		3600	213/5T	00736ET3H213T-W22G	$1,325	N1	163	1.25	7.01	89.5	19.517	575	34
		1800	213/5T	00718ET3E213T-SG	$1,148	RSP	131	1.15	9.10	91.7	18.898	230/460	9;34
		1800	213/5TC	00718ET3E213TC-SG	$1,194	RSP	140	1.15	9.10	91.7	18.898	230/460	9;34;51
		1800	213/5T	00718ET3H213T-SG	$1,148	RSP	131	1.15	7.30	91.7	18.898	575	9;34
		1800	213/5T	00718ET3V213T-SG	$1,148	RSP	131	1.15	10.5	91.7	18.898	200/400	9;34
		1800	213/5T	00718ET3E213TC-W22G	$1,341	N1	174	1.25	9.18	91.7	19.517	230/460	34
		1800	213/5T	00718ET3E213T-W22G	$1,289	N1	170	1.25	9.18	91.7	19.517	230/460	34
		1800	213/5T	00718ET3H213T-W22G	$1,289	N1	174	1.25	7.34	91.7	19.517	575	34
		1200	254/6T	00712ET3E254T-SG	$2,079	RSP	232	1.15	10.0	91.0	22.559	230/460	9;34
		1200	254/6T	00712ET3H254T-SG	$2,079	RSP	232	1.15	8.00	91.0	22.559	575	9;34
		1200	254/6T	00712ET3E254T-W22G	$2,345	N1	300	1.25	9.48	91.0	24.945	230/460	34
		1200	254/6T	00712ET3H254T-W22G	$2,345	N1	316	1.25	7.58	91.0	24.945	575	34

continued on next page

Please refer to inside back cover for description of "NOTES"

For detailed specifications, data sheets, drawings and performance curves visit http:// www.weg.net

Data subject to change without notice.

TEFC - Three-Phase - Foot Mount and Foot Mount with C-Face - *continued*

HP	kW	RPM	Frame	Catalog Number	List Price	Mult. Symbol	Approx. Shipping Weight (lbs)	Service Factor	FL Amps @ High	FL. Eff (%)	"C" Dimension (in)	Voltage (V)	Notes
10	7.5	3600	213/5T	01036ET3E215T-SRG	$1,496	RSP	178	1.15	11.5	90.2	19.291	230/460	9;34
		3600	213/5T	01036ET3E215T-SG	$1,360	RSP	157	1.15	11.5	90.2	20.079	230/460	9;34
		3600	213/5T	01036ET3E215T-W22G	$1,532	N1	172	1.25	11.60	90.2	19.517	230/460	34
		3600	213/5T	01036ET3H215T-W22G	$1,532	N1	180	1.25	9.28	90.2	19.517	575	34
		3600	213/5TC	01036ET3E215TC-SG	$1,405	RSP	178	1.15	11.5	90.2	21.654	230/460	9;34;51
		3600	213/5T	01036ET3H215T-SG	$1,360	RSP	156	1.15	9.20	90.2	20.079	575	9;34
		1800	213/5T	01018ET3E215T-SG	$1,310	RSP	141	1.15	12.2	91.7	19.291	230/460	9;34
		1800	213/5TC	01018ET3E215TC-SG	$1,354	RSP	151	1.15	12.2	91.7	19.291	230/460	9;34;51
		1800	213/5T	01018ET3H215T-SG	$1,310	RSP	141	1.15	9.80	91.7	19.291	575	9;34
		1800	213/5T	01018ET3V215T-SG	$1,310	RSP	141	1.15	14.0	91.7	19.291	200/400	9;34
		1800	213/5T	01018ET3E215TC-W22G	$1,525	N1	183	1.25	12.40	91.7	19.517	230/460	34
		1800	213/5T	01018ET3H215T-W22G	$1,473	N1	188	1.25	9.92	91.7	19.517	575	34
		1200	254/6T	01012ET3E256T-SG	$2,368	RSP	263	1.15	13.8	91.0	23.346	230/460	9;34
		1200	254/6T	01012ET3H256T-SG	$2,368	RSP	263	1.15	11.0	91.0	23.346	575	9;34
		1200	254/6T	01012ET3E256T-W22G	$2,676	N1	318	1.25	12.90	91.0	24.945	230/460	34
		1200	254/6T	01012ET3H256T-W22G	$2,676	N1	325	1.25	10.30	91.0	24.945	575	34
15	11	3600	254/6T	01536ET3E254T-SG	$1,869	RSP	216	1.15	17.4	91.0	22.559	230/460	9;34
		3600	254/6TC	01536ET3E254TC-SG	$1,929	RSP	216	1.15	17.4	91.0	22.559	230/460	9;34;51
		3600	254/6T	01536ET3H254T-SG	$1,869	RSP	216	1.15	13.9	91.0	22.559	575	9;34
		3600	254/6T	01536ET3E254T-W22G	$2,104	N1	300	1.25	17.2	91.0	24.945	230/460	9;34
		3600	254/6T	01536ET3H254T-W22G	$2,104	N1	298	1.25	13.80	91.0	24.945	575	34
		1800	254/6T	01518ET3E254T-SG	$1,890	RSP	234	1.15	18.2	92.4	22.559	230/460	9;34
		1800	254/6TC	01518ET3E254TC-SG	$1,950	RSP	248	1.15	18.2	92.4	22.559	230/460	9;34
		1800	254/6T	01518ET3H254T-SG	$1,890	RSP	234	1.15	14.6	92.4	22.559	575	34
		1800	254/6T	01518ET3V254T-SG	$1,890	RSP	234	1.15	20.9	92.4	22.559	200/400	34
		1800	254/6T	01518ET3E254TC-W22G	$2,197	N1	340	1.25	18.00	92.4	24.945	230/460	34
		1800	254/6T	01518ET3E254T-W22G	$2,128	N1	349	1.25	18.0	92.4	24.961	230/460	9;34;51
		1800	254/6T	01518ET3H254T-W22G	$2,128	N1	347	1.25	14.40	92.4	24.945	575	34
		1200	284/6TS	01512ET3E284TS-W22G	$3,601	N1	360	1.25	17.9	91.7	26.557	230/460	34
		1200	284/6T	01512ET3E284T-W22G	$3,601	N1	422	1.25	17.9	91.7	27.929	230/460	9;34
		1200	284/6TS	01512ET3H284TS-W22G	$3,601	N1	360	1.25	14.3	91.7	26.557	575	9;34;51
		1200	284/6T	01512ET3H284T-W22G	$3,601	N1	420	1.25	14.30	91.7	27.929	575	34
20	15	3600	254/6T	02036ET3E256T-SG	$2,356	RSP	242	1.15	22.7	91.0	23.346	230/460	9;34
		3600	254/6TC	02036ET3E256TC-SG	$2,416	RSP	245	1.15	22.7	91.0	23.346	230/460	9;34
		3600	254/6T	02036ET3H256T-SG	$2,356	RSP	242	1.15	18.2	91.0	23.346	575	9;34;51
		3600	254/6T	02036ET3E256T-W22G	$2,662	N1	325	1.25	23.2	91.0	24.961	230/460	9;34
		3600	254/6T	02036ET3H256T-W22G	$2,662	N1	323	1.25	18.60	91.0	24.945	575	34
		1800	254/6T	02018ET3E256T-SG	$2,198	RSP	265	1.15	24.7	92.4	23.346	230/460	9;34;51
		1800	254/6TC	02018ET3E256TC-SG	$2,258	RSP	279	1.15	24.7	93.0	23.346	230/460	34
		1800	254/6T	02018ET3H256T-SG	$2,198	RSP	265	1.15	19.8	93.0	23.346	575	34
		1800	254/6T	02018ET3V256T-SG	$2,198	RSP	265	1.15	28.4	93.0	23.346	200/400	34
		1800	254/6T	02018ET3E256T-W22G	$2,481	N1	386	1.25	24.10	93.0	24.945	230/460	34
		1800	254/6T	02018ET3E256TC-W22G	$2,550	N1	389	1.25	24.10	93.0	24.945	230/460	34
		1800	254/6T	02018ET3H256T-W22G	$2,481	N1	396	1.25	19.30	93.0	24.945	575	34
		1200	284/6T	02012ET3E286T-W22G	$4,272	N1	449	1.25	24.2	91.7	27.929	230/460	34
		1200	284/6T	02012ET3H286T-W22G	$4,272	N1	450	1.25	19.4	91.7	27.929	575	34

continued on next page

Please refer to inside back cover for description of "NOTES"

For detailed specifications, data sheets, drawings and performance curves visit http://www.weg.net

HVAC MOTORS - WITH INTERNAL AEGIS® SGR

TEFC - Three-Phase - Foot Mount and Foot Mount with C-Face - *continued*

HP	kW	RPM	Frame	Catalog Number	List Price	Mult. Symbol	Approx. Shipping Weight (lbs)	Service Factor	FL Amps @ High	FL. Eff (%)	"C" Dimension (in)	Voltage (V)	Notes
25	18.5	3600	284/6TS	02536ET3E284TS-W22G	$3,308	N1	406	1.25	28.5	91.7	26.557	230/460	34
		3600	284/6TS	02536ET3H284TS-W22G	$3,308	N1	400	1.25	22.8	91.7	26.557	575	34
		1800	284/6T	02518ET3E284T-W22G	$3,053	N1	440	1.25	29.5	93.6	27.929	230/460	34
		1800	284/6T	02518ET3H284T-W22G	$3,053	N1	439	1.25	23.6	93.6	27.929	575	34
		1800	284/6T	02518ET3V284T-W22G	$3,053	N1	440	1.25	33.9	93.6	27.929	200/400	34
		1800	284/6T	02518ET3E284TC-W22G	$3,151	N1	418	1.25	29.50	93.6	27.929	230/460	34
		1200	324/6T	02512ET3E324T-W22G	$5,137	N1	585	1.25	30.4	93.0	31.116	230/460	34
		1200	324/6T	02512ET3H324T-W22G	$5,137	N1	569	1.25	24.3	93.0	31.116	575	34
30	22	3600	284/6TS	03036ET3E286TS-W22G	$3,871	N1	425	1.25	33.8	91.7	26.557	230/460	34
		3600	284/6TS	03036ET3H286TS-W22G	$3,871	N1	430	1.25	27.0	91.7	26.557	575	34
		1800	284/6T	03018ET3E286T-W22G	$3,533	N1	478	1.25	35.1	93.6	27.929	230/460	34
		1800	284/6TC	03018ET3E286TC-W22G	$3,632	N1	486	1.25	35.1	93.6	27.929	230/460	34
		1800	284/6T	03018ET3H286T-W22G	$3,533	N1	476	1.25	28.1	93.6	27.929	575	34
		1800	284/6T	03018ET3V286T-W22G	$3,533	N1	479	1.25	40.4	93.6	27.929	200/400	34
		1200	324/6T	03012ET3E326T-W22G	$5,673	N1	629	1.25	36.2	93.0	31.116	230/460	34
		1200	324/6TC	03012ET3E326TC-W22G	$5,794	N1	621	1.25	36.2	93.0	31.116	230/460	34,51
		1200	324/6T	03012ET3H326T-W22G	$5,673	N1	621	1.25	29.0	93.0	31.116	575	34
40	30	3600	324/6TS	04036ET3E324TS-W22G	$5,125	N1	590	1.25	45.8	92.4	29.616	230/460	34
		3600	324/6TS	04036ET3H324TS-W22G	$5,125	N1	572	1.25	36.6	92.4	29.616	575	34
		1800	324/6T	04018ET3E324T-W22G	$4,578	N1	615	1.25	47.1	94.1	31.116	230/460	34
		1800	324/6T	04018ET3H324T-W22G	$4,578	N1	614	1.25	37.7	94.1	31.116	575	34
		1800	324/6T	04018ET3V324T-W22G	$4,578	N1	616	1.25	54.2	94.1	31.116	200/400	34
		1800	324/6T	04018ET3E324TC-W22G	$4,700	N1	606	1.25	47.10	94.1	31.116	230/460	34
		1200	364/5T	04012ET3E364T-W22G	$8,124	N1	1004	1.25	46.5	94.1	34.251	230/460	34
		1200	364/5T	04012ET3H364T-W22G	$8,124	N1	950	1.25	37.2	94.1	34.251	575	34
50	37	3600	324/6TS	05036ET3E326TS-W22G	$5,716	N1	612	1.25	56.1	93.0	29.616	230/460	34
		3600	324/6TS	05036ET3H326TS-W22G	$5,716	N1	605	1.25	44.9	93.0	29.616	575	34
		1800	324/6T	05018ET3E326T-W22G	$5,500	N1	638	1.25	59.2	94.5	31.116	230/460	34
		1800	324/6T	05018ET3H326T-W22G	$5,500	N1	634	1.25	47.4	94.5	31.116	575	34
		1800	324/6T	05018ET3V326T-W22G	$5,500	N1	637	1.25	68.1	94.5	31.116	200/400	34,51
		1200	364/5T	05012ET3E365T-W22G	$9,358	N1	1021	1.25	57.4	94.1	34.251	230/460	34
		1200	364/5T	05012ET3H365T-W22G	$9,358	N1	1009	1.25	45.9	94.1	34.251	575	34
60	45	3600	364/5TS	06036ET3E364TS-W22G	$8,392	N1	962	1.25	67.0	93.6	32.338	230/460	34
		3600	364/5TS	06036ET3H364TS-W22G	$8,392	N1	954	1.25	53.6	93.6	32.338	575	34,51
		1800	364/5T	06018ET3E364T-W22G	$8,229	N1	1029	1.25	68.3	95.0	34.251	230/460	34
		1800	364/5T	06018ET3H364T-W22G	$8,229	N1	1027	1.25	54.6	95.0	34.251	575	34
		1200	404/5T	06012ET3E404T-W22G	$11,697	N1	1213	1.25	69.5	94.5	39.730	230/460	34
		1200	404/5T	06012ET3H404T-W22G	$11,697	N1	1213	1.25	55.6	94.5	39.730	575	34
75	55	3600	364/5TS	07536ET3E365TS-W22G	$9,931	N1	965	1.25	81.9	93.6	32.338	230/460	34
		3600	364/5TS	07536ET3H365TS-W22G	$9,931	N1	967	1.25	65.5	93.6	32.338	575	34,51
		1800	364/5T	07518ET3E365T-W22G	$9,545	N1	1046	1.25	84.1	95.4	34.251	230/460	34
		1800	364/5TC	07518ET3E365TC-W22G	$9,988	N1	1041	1.25	84.1	95.4	34.251	230/460	34,51
		1800	364/5T	07518ET3H365T-W22G	$9,545	N1	1044	1.25	67.3	95.4	34.251	575	34
		1200	404/5T	07512ET3E405T-W22G	$13,258	N1	882	1.25	84.9	94.5	39.730	230/460	34
		1200	404/5T	07512ET3H405T-W22G	$13,258	N1	882	1.25	67.9	94.5	39.730	575	34

continued on next page

Please refer to inside back cover for description of "NOTES"

For detailed specifications, data sheets, drawings and performance curves visit http:// www.weg.net

Data subject to change without notice.

TEFC - Three-Phase - Foot Mount and Foot Mount with C-Face - *continued*

HP	kW	RPM	Frame	Catalog Number	List Price	Mult. Symbol	Approx. Shipping Weight (lbs)	Service Factor	FL Amps @ High	FL. Eff (%)	"C" Dimension (in)	Voltage (V)	Notes
100	75	3600	404/5TS	10036ET3E405TS-W22G	$13,202	N1	1193	1.25	110	94.1	36.732	230/460	34
		1800	404/5T	10018ET3E405T-W22G	$12,889	N1	1283	1.25	111	95.4	39.730	230/460	34
		1800	404/5T	10018ET3H405T-W22G	$12,889	N1	1292	1.25	88.8	95.4	39.730	575	34
		1200	444/5T	10012ET3E444T-W22G	$17,181	N1	1885	1.25	121	95.0	45.157	230/460	34
		1200	444/5T	10012ET3H444T-W22G	$17,181	N1	1885	1.25	96.8	95.0	45.157	575	34
125	90	3600	444/5TS	12536ET3E444TS-W22G	$16,900	N1	1836	1.15	134	95.0	41.407	230/460	34
		3600	444/5TS	12536ET3H444TS-W22G	$16,900	N1	1836	1.15	107	95.0	41.407	575	34
		1800	444/5T	12518ET3E444T-W22G	$16,298	N1	1824	1.15	139	95.4	45.157	230/460	34
		1800	444/5TC	12518ET3E444TC-W22G	$16,904	N1	1861	1.15	139	95.4	45.157	230/460	34
		1800	444/5T	12518ET3H444T-W22G	$16,298	N1	1824	1.15	111	95.4	45.157	575	34
		1800	444/5TC	12518ET3G444TC-W22G	$17,768	N1	1754	1.15	139	95.4	45.157	460	34,51
		1200	444/5T	12512ET3E445T-W22G	$19,497	N1	2004	1.15	143	95.0	45.157	230/460	34
		1200	444/5T	12512ET3H445T-W22G	$19,497	N1	2004	1.15	114	95.0	45.157	575	34
150	110	1800	444/5TC	15018ET3E445TC-W22G	$19,575	N1	1960	1.15	170	95.8	45.157	230/460	34
		1800	444/5TC	15018ET3G445TC-W22G	$19,575	N1	1960	1.15	170	95.8	45.157	460	34,51

Please refer to inside back cover for description of "NOTES"

For detailed specifications, data sheets, drawings and performance curves visit http://www.weg.net

ODP - Three-Phase - Foot Mount and Foot Mount with C-Face

HP	kW	RPM	Frame	Catalog Number	List Price	Mult. Symbol	Approx. Shipping Weight (lbs)	Service Factor	FL Amps @ High	FL. Eff (%)	"C" Dimension (in)	Voltage (V)	Notes
1	0.75	1800	143/5T	00118OT3E143T-SG*	$530	N1S	38	1.15	1.50	85.5	11.181	230/460	9;34
		1800	143/5TC	00118OT3E143TC-SG	$564	N1S	38	1.15	1.50	85.5	11.181	230/460	9;34
		1800	143/5T	00118OT3H143T-SG	$530	N1S	38	1.15	1.20	85.5	11.181	575	9;34,51
		1800	143/5T	00118OT3V143T-SG	$530	N1S	38	1.15	1.70	85.5	11.181	200/400	9;34,51
		1200	143/5T	00112OT3E145T-SG	$586	N1S	38	1.15	1.70	82.5	11.181	230/460	9;34,51
		1200	143/5T	00112OT3H145T-SG	$586	N1S	38	1.15	1.30	82.5	11.181	575	9;34
1.5	1.1	3600	143/5T	00156OT3E143T-SG	$582	N1S	33	1.15	1.90	84.0	11.181	230/460	9;34
		1800	143/5T	00158OT3E145T-SG	$589	N1S	45	1.15	2.10	86.5	12.362	230/460	9;34
		1800	143/5TC	00158OT3E145TC-SG	$623	N1S	45	1.15	2.10	86.5	12.362	230/460	9;34,51
		1800	143/5T	00158OT3H145T-SG	$589	N1S	45	1.15	1.70	86.5	12.362	575	9;34
		1800	143/5T	00158OT3V145T-SG	$589	N1S	45	1.15	2.40	86.5	12.362	200/400	9;34
		1800	143/5TC	00158OT3V145TC-SG	$623	N1S	45	1.15	2.40	86.5	12.362	200/400	9;34,51
		1200	182/4T	00152OT3E182T-SG	$758	N1S	63	1.15	2.30	86.5	13.976	230/460	9;34
2	1.5	3600	143/5T	00236OT3E145T-SG	$627	N1S	40	1.15	2.40	85.5	11.969	230/460	9;34
		1800	143/5T	00218OT3E145T-SG	$632	N1S	43	1.15	2.70	86.5	12.362	230/460	9;34
		1800	143/5TC	00218OT3E145TC-SG	$666	N1S	43	1.15	2.70	86.5	12.362	230/460	9;34,51
		1800	143/5T	00218OT3H145T-SG	$632	N1S	43	1.15	2.20	86.5	12.362	575	9;34,51
		1800	143/5T	00218OT3V145T-SG	$632	N1S	43	1.15	3.10	86.5	12.362	200/400	9;34
		1200	182/4T	00212OT3E184T-SG	$767	N1S	73	1.15	3.00	87.5	14.764	230/460	9;34
3	2.2	3600	143/5T	00336OT3E145T-SG	$685	N1S	44	1.15	3.60	85.5	12.362	230/460	9;34
		1800	182/4T	00318OT3E182T-SG	$694	N1S	73	1.15	3.90	89.5	15.157	230/460	9;34
		1800	182/4TC	00318OT3E182TC-SG	$732	N1S	73	1.15	3.90	89.5	15.157	230/460	9;34
		1800	182/4T	00318OT3H182T-SG	$694	N1S	73	1.15	3.10	89.5	15.157	575	9;34
		1800	182/4T	00318OT3V182T-SG	$694	N1S	73	1.15	4.40	89.5	15.157	200/400	9;34
		1800	182/4TC	00318OT3V182TC-SG	$732	N1S	73	1.15	4.40	89.5	15.157	200/400	9;34,51
		1200	213/5T	00312OT3E213T-SG	$975	N1S	113	1.15	4.20	88.5	16.575	230/460	9;34
		1200	213/5T	00312OT3H213T-SG	$975	N1S	113	1.15	3.30	88.5	16.575	575	9;34
5	3.7	3600	182/4T	00536OT3E182T-SG	$821	N1S	60	1.15	6.10	86.5	13.977	230/460	9;34
		3600	182/4TC	00536OT3E182TC-SG	$859	N1S	59	1.15	6.10	86.5	14.764	230/460	9;34,51
		1800	182/4T	00518OT3E184T-SG	$800	N1S	88	1.15	6.30	89.5	16.339	230/460	9;34
		1800	182/4TC	00518OT3E184TC-SG	$838	N1S	88	1.15	6.30	89.5	16.339	230/460	9;34
		1800	182/4T	00518OT3H184T-SG	$800	N1S	88	1.15	5.10	89.5	16.339	575	9;34
		1800	182/4T	00518OT3V184T-SG	$800	N1S	88	1.15	7.30	89.5	16.339	200/400	9;34
		1800	182/4TC	00518OT3V184TC-SG	$838	N1S	88	1.15	7.30	89.5	16.339	200/400	9;34,51
		1200	213/5T	00512OT3E215T-SG	$1,257	N1S	135	1.15	6.70	89.5	16.969	230/460	9;34

continued on next page

Please refer to inside back cover for description of "NOTES"

For detailed specifications, data sheets, drawings and performance curves visit http:// www.weg.net

Data subject to change without notice.

ODP - Three-Phase - Foot Mount and Foot Mount with C-Face - *continued*

HP	kW	RPM	Frame	Catalog Number	List Price	Mult. Symbol	Approx. Shipping Weight (lbs)	Service Factor	FL Amps @ High	FL. Eff (%)	"C" Dimension (in)	Voltage (V)	Notes
7.5	5.5	3600	182/4T	007360T3E184T-SG	$1,090	N1S	76	1.15	8.70	88.5	15.157	230/460	9;34
		3600	182/4TC	007360T3E184TC-SG	$1,128	N1S	70	1.15	8.70	88.5	15.157	230/460	9;34,51
		1800	213/5T	007180T3E213T-SG	$1,110	N1S	125	1.15	9.30	91.0	16.575	230/460	9;34
		1800	213/5TC	007180T3E213TC-SG	$1,161	N1S	125	1.15	9.30	91.0	16.575	230/460	9;34
		1800	213/5T	007180T3H213T-SG	$1,110	N1S	125	1.15	7.40	91.0	16.575	575	9;34,51
		1800	213/5T	007180T3V213T-SG	$1,110	N1S	125	1.15	10.6	91.0	16.575	200/400	9;34
		1800	213/5TC	007180T3V213TC-SG	$1,161	N1S	125	1.15	10.6	91.0	16.575	200/400	9;34
		1200	254/6T	007120T3E254T-SG	$1,747	N1S	209	1.15	10.2	90.2	20.472	230/460	9;34
		1200	254/6TC	007120T3E254TC-SG	$1,815	N1S	209	1.15	10.2	90.2	20.472	230/460	9;34
		1200	254/6T	007120T3H254T-SG	$1,747	N1S	209	1.15	8.20	90.2	20.472	575	9;34
10	7.5	3600	213/5T	010360T3E213T-SG	$1,281	N1S	117	1.15	12.0	89.5	16.575	230/460	9;34
		3600	213/5TC	010360T3E213TC-SG	$1,332	N1S	126	1.15	12.0	89.5	16.969	230/460	9;34,51
		1800	213/5T	010180T3E215T-SG	$1,302	N1S	130	1.15	12.4	91.7	16.575	230/460	9;34
		1800	213/5TC	010180T3E215TC-SG	$1,353	N1S	130	1.15	12.4	91.7	16.575	230/460	9;34
		1800	213/5T	010180T3H215T-SG	$1,302	N1S	130	1.15	9.90	91.7	16.575	575	9;34
		1800	213/5T	010180T3V215T-SG	$1,302	N1S	130	1.15	14.3	91.7	16.575	200/400	9;34,51
		1800	213/5TC	010180T3V215TC-SG	$1,353	N1S	130	1.15	14.3	91.7	16.575	200/400	9;34
		1200	254/6T	010120T3E256T-SG	$1,997	N1S	237	1.15	13.9	91.7	20.472	230/460	9;34
		1200	254/6T	010120T3H256T-SG	$1,997	N1S	237	1.15	11.1	91.7	20.472	575	9;34
15	11	3600	213/5T	015360T3E215T-SG	$1,692	N1S	141	1.15	17.2	90.2	17.756	230/460	9;34
		3600	213/5TC	015360T3E215TC-SG	$1,743	N1S	141	1.15	17.2	90.2	17.756	230/460	9;34,51
		1800	254/6T	015180T3E254T-SG	$1,757	N1S	211	1.15	18.6	93.0	20.472	230/460	9;34
		1800	254/6TC	015180T3E254TC-SG	$1,825	N1S	211	1.15	18.6	93.0	20.472	230/460	9;34
		1800	254/6T	015180T3H254T-SG	$1,757	N1S	211	1.15	14.9	93.0	20.472	575	9;34
		1800	254/6T	015180T3V254T-SG	$1,757	N1S	211	1.15	21.4	93.0	20.472	200/400	9;34
		1200	284T	015120T3E284T-W40G	$2,722	N1B	340	1.25	18.4	91.7	23.158	230/460	34
20	15	3600	254/6T	020360T3E254T-SG	$2,040	N1S	187	1.15	23.8	91.0	20.472	230/460	9;34
		3600	254/6TC	020360T3E254TC-SG	$2,108	N1S	187	1.15	23.8	91.0	20.472	230/460	9;34,51
		1800	254/6T	020180T3E256T-SG	$2,112	N1S	235	1.15	25.0	93.0	20.472	230/460	9;34
		1800	254/6TC	020180T3E256TC-SG	$2,180	N1S	235	1.15	25.0	93.0	20.472	230/460	9;34
		1800	254/6T	020180T3H256T-SG	$2,112	N1S	235	1.15	20.0	93.0	20.472	575	9;34
		1800	254/6T	020180T3V256T-SG	$2,112	N1S	235	1.15	28.8	93.0	20.472	200/400	9;34
		1800	254/6TC	020180T3V256TC-SG	$2,180	N1S	235	1.15	28.8	93.0	20.472	200/400	9;34
		1200	284/6T	020120T3E286T-W40G	$3,344	N1B	415	1.25	24.3	92.4	24.658	230/460	34
25	18.5	3600	254/6T	025360T3E256T-SG	$2,419	N1S	202	1.15	29.1	91.7	20.472	230/460	9;34
		3600	254/6TC	025360T3E256TC-SG	$2,487	N1S	202	1.15	29.1	91.7	20.472	230/460	9;34,51
		1800	284T	025180T3E284T-W40G	$2,470	N1B	381	1.25	29.5	93.6	23.158	230/460	34
		1800	284TC	025180T3E284TC-W40G	$2,555	N1B	388	1.25	29.5	93.6	23.158	230/460	34
		1800	284T	025180T3H284T-W40G	$2,470	N1B	380	1.25	23.6	93.6	23.158	575	34
		1800	284T	025180T3V284T-W40G	$2,470	N1B	372	1.25	33.9	93.6	23.158	200/400	34
		1200	324T	025120T3E324T-W40G	$3,919	N1B	485	1.25	30.8	93.0	25.807	230/460	34

continued on next page

Please refer to inside back cover for description of "NOTES"

For detailed specifications, data sheets, drawings and performance curves visit http://www.weg.net

HVAC MOTORS - WITH INTERNAL AEGIS® SGR

ODP - Three-Phase - Foot Mount and Foot Mount with C-Face - *continued*

HP	kW	RPM	Frame	Catalog Number	List Price	Mult. Symbol	Approx. Shipping Weight (lbs)	Service Factor	FL Amps @ High	FL. Eff (%)	"C" Dimension (in)	Voltage (V)	Notes
30	22	3600	284TS	030360T3E284TS-W40G	$2,797	N1B	333	1.25	35.0	91.7	21.783	230/460	34
		1800	284/6T	030180T3E286T-W40G	$2,840	N1B	428	1.25	34.9	94.1	24.658	230/460	34
		1800	284/6TC	030180T3E286TC-W40G	$2,925	N1B	435	1.25	34.9	94.1	24.658	230/460	34
		1800	284/6T	030180T3H286T-W40G	$2,840	N1B	432	1.25	27.9	94.1	24.658	575	34
		1800	284/6T	030180T3V286T-W40G	$2,840	N1B	432	1.25	40.1	94.1	24.658	200/400	34
		1200	324/6T	030120T3E326T-W40G	$4,290	N1B	548	1.25	36.0	93.6	27.307	230/460	34
40	30	3600	284/6TS	040360T3E286TS-W40G	$3,618	N1B	377	1.25	46.8	92.4	23.283	230/460	34
		3600	284/6TSC	040360T3E286TSC-W40G	$3,703	N1B	397	1.25	46.8	92.4	23.283	230/460	34
		1800	324TS	040180T3E324TS-W40G	$3,372	N1B	505	1.25	47.6	94.1	24.307	230/460	34
		1800	324T	040180T3E324T-W40G	$3,495	N1B	481	1.25	47.6	94.1	25.807	230/460	34
		1800	324TC	040180T3E324TC-W40G	$3,595	N1B	497	1.25	47.6	94.1	25.807	230/460	34
		1800	324T	040180T3H324T-W40G	$3,495	N1B	505	1.25	38.1	94.1	25.807	575	34
		1800	324T	040180T3V324T-W40G	$3,495	N1B	486	1.25	54.7	94.1	25.807	200/400	34
		1800	324TC	040180T3V324TC-W40G	$3,595	N1B	505	1.25	54.7	94.1	25.807	200/400	34,51
		1200	364/5T	040120T3E364T-W40G	$6,384	N1B	855	1.25	47.1	94.1	29.725	230/460	34
50	37	3600	324TS	050360T3E324TS-W40G	$4,097	N1B	520	1.25	58.7	93.0	24.307	230/460	34
		3600	324TSC	050360T3E324TSC-W40G	$4,197	N1B	520	1.25	58.7	93.0	24.307	230/460	34
		1800	326TC	050180T3E326TC-G*	$4,288	N1B	587	1.15	59.9	94.5	27.667	230/460	34
		1800	324/6T	050180T3E326T-W40G	$4,188	N1B	544	1.25	58.5	94.5	27.307	230/460	34
		1800	324/6TC	050180T3E326TC-W40G	$4,288	N1B	563	1.25	58.5	94.5	27.307	230/460	34
		1800	324/6T	050180T3H326T-W40G	$4,188	N1B	535	1.25	46.8	94.5	27.307	575	34
		1800	324/6T	050180T3V326T-W40G	$4,188	N1B	520	1.25	67.3	94.5	27.307	200/400	34
		1200	364/5T	050120T3E365T-W40G	$7,232	N1B	884	1.25	58.1	94.1	29.725	230/460	34,51
60	45	3600	324/6TS	060360T3E326TS-W40G	$4,858	N1B	548	1.25	71.0	93.6	25.807	230/460	34
		1800	364/5T	060180T3E364T-W40G	$5,283	N1B	854	1.25	69.9	95.0	29.725	230/460	34
		1800	364/5TC	060180T3E364TC-W40G	$5,677	N1B	881	1.25	69.9	95.0	29.725	230/460	34
		1800	364/5T	060180T3H364T-W40G	$5,283	N1B	847	1.25	55.9	95.0	29.725	575	34
		1200	404/5T	060120T3E404T-W40G	$8,762	N1B	1051	1.25	70.3	94.5	34.100	230/460	34,51
75	55	3600	364/5TS	075360T3E364TS-W40G	$6,172	N1B	789	1.25	84.8	93.6	27.522	230/460	34
		3600	364/5TSC	075360T3E364TSC-W40G	$6,566	N1B	794	1.25	84.8	93.6	27.522	230/460	34,51
		1800	364/5T	075180T3E365T-W40G	$6,498	N1B	878	1.25	85.5	95.0	29.725	230/460	34
		1800	364/5TC	075180T3E365TC-W40G	$6,892	N1B	904	1.25	85.5	95.0	29.725	230/460	34
		1800	364/5T	075180T3H365T-W40G	$6,498	N1B	875	1.25	68.4	95.0	29.725	575	34
		1200	404/5T	075120T3E405T-W40G	$9,558	N1B	1087	1.25	85.9	94.5	34.100	230/460	34,51
100	75	3600	364/5TS	100360T3E365TS-W40G	$7,484	N1B	835	1.25	116	93.6	27.522	230/460	34,51
		1800	404/5TS	100180T3E404TS-W40G	$7,751	N1B	1047	1.25	115	95.4	31.100	230/460	34
		1800	404/5T	100180T3E404T-W40G	$8,341	N1B	1064	1.25	115	95.4	34.100	230/460	34
		1800	404/5T	100180T3H404T-W40G	$8,341	N1B	1070	1.25	92.0	95.4	34.100	575	34
		1200	444/5T	100120T3E444T-W40G	$13,463	N1B	1403	1.25	127	95.0	38.108	230/460	34,51
125	90	3600	404/5TS	125360T3E404TS-W40G	$10,026	N1B	955	1.25	136	94.1	31.100	230/460	34,51
		1800	404/5T	125180T3E405T-W40G	$9,181	N1B	1156	1.25	138	95.4	34.100	230/460	34,51
		1800	404/5TC	125180T3E405TC-W40G	$9,627	N1B	1156	1.25	138	95.4	34.100	230/460	34
		1800	404/5T	125180T3H405T-W40G	$9,181	N1B	1156	1.25	110	95.4	34.100	575	34,51
		1200	444/5T	125120T3G445T-W40G	$14,353	N1B	1497	1.25	154	95.0	38.108	460	34,51
150	110	3600	404/5TS	150360T3G405TS-W40G	$12,616	N1B	1004	1.25	167	94.1	31.100	460	34,51
		1800	444/5TS	150180T3G444TS-W40G	$11,868	N1B	1425	1.25	170	95.8	34.358	460	34

** To be discontinued and replaced by W40 model once inventory is depleted.*

Please refer to inside back cover for description of "NOTES"

For detailed specifications, data sheets, drawings and performance curves visit http:// www.weg.net

Data subject to change without notice.

Air Handling Motors

COOLING TOWER MOTORS

Three-Phase TEFC & TEAO

WEG's cooling tower motors are designed for operation in 100% humidity and the most corrosive environments. They are designed to operate in either horizontal or vertical mounting.

WEG's W22 cast iron platform has a superior cooling system and solid feet for cool operation and low vibration and noise extending the life of the motor.

Standard Features:

- 50/60 Hz rated (380V on Nameplate - 400/415 Available - Same Horse Power at 50 Hz with a 1.0 Service Factor)
- Class F insulation (Impregnation Resin and magnet Wire are class H)
- Standard mounting is F2. F1 mounted motors are identified in the part number. (Both configurations are convertible).
- Stainless Steel Nameplate - Laser etched with high contrast background
- Double Sealed bearings
- Space Heaters 110-127/200-240V (200-240V 143/5T)

Features that make a difference:

- 1.25 Service Factor
- Multiple endbell drain plugs for shaft up, down or horizontal mounting
- Drain plugs in terminal box
- Rubber lead separator between terminal box and frame
- Internally and externally epoxy painted (C4 per ISO12944)
- Double sealed bearings
- Double impregnation and bake

Inverter Rated:
1000:1 for variable torque

COOLING TOWER MOTORS - THREE-PHASE

TEFC - Three-Phase - Foot Mount - NEMA Premium®

HP	kW	RPM	Frame	Catalog Number	List Price	Mult. Symbol	Approx. Shipping Weight (lbs)	Service Factor	FL Amps @ High	FL. Eff (%)	"C" Dimension (in)	Voltage (V)	Notes
1	0.75	1800	143T	00118ET3ECT143TF1-W2	$647	L1	48	1.25	1.47	85.5	12.346	230/460	
		1800	143T	00118ET3ECT143T-W22	$647	L1	48	1.25	1.47	85.5	12.346	230/460	7
		1800	143T	00118ET3PCT143T-W22	$647	L1	48	1.25	3.38	85.5	12.346	200	7
		1200	143/5T	00112ET3ECT145TF1-W2	$728	L1	56	1.25	1.73	82.5	13.358	230/460	
		1200	143/5T	00112ET3ECT145T-W22	$728	L1	58	1.25	1.73	82.5	13.358	230/460	7
		1200	143/5T	00112ET3PCT145TF1-W2	$728	L1	56	1.25	3.98	82.5	13.358	200	
		1200	143/5T	00112ET3PCT145T-W22	$728	L1	58	1.25	3.98	82.5	13.358	200	7,51
1.5	1.1	1800	143/5T	00158ET3ECT145TF1-W2	$676	L1	56	1.25	2.02	86.5	13.358	230/460	
		1800	143/5T	00158ET3ECT145T-W22	$676	L1	56	1.25	2.02	86.5	13.358	230/460	7
		1800	143/5T	00158ET3PCT145TF1-W2	$676	L1	56	1.25	4.65	86.5	13.358	200	
		1800	143/5T	00158ET3PCT145T-W22	$676	L1	56	1.25	4.65	86.5	13.358	200	7
		1200	182T	00152ET3ECT182T-W22	$903	L1	98	1.25	2.54	87.5	14.860	230/460	7
		1200	182T	00152ET3PCT182T-W22	$903	L1	79	1.25	5.84	87.5	14.860	200	7
2	1.5	1800	143/5T	00218ET3ECT145TF1-W2	$752	L1	58	1.25	2.76	86.5	13.358	230/460	
		1800	143/5T	00218ET3ECT145T-W22	$752	L1	58	1.25	2.76	86.5	13.358	230/460	7
		1800	143/5T	00218ET3HCT145T-W22	$752	L1	58	1.25	2.21	86.5	13.358	575	7
		1800	143/5T	00218ET3PCT145TF1-W2	$752	L1	58	1.25	6.35	86.5	13.358	200	
		1800	143/5T	00218ET3PCT145T-W22	$752	L1	58	1.25	6.35	86.5	13.358	200	7
		1200	182/4T	00212ET3ECT184T-W22	$981	L1	107	1.25	3.23	88.5	15.860	230/460	7
		1200	182/4T	00212ET3PCT184T-W22	$981	L1	97	1.25	7.43	88.5	15.860	200	7
3	2.2	1800	182T	00318ET3ECT182TF1-W2	$781	L1	96	1.25	3.91	89.5	14.860	230/460	
		1800	182T	00318ET3ECT182T-W22	$781	L1	96	1.25	3.91	89.5	14.860	230/460	7
		1800	182T	00318ET3HCT182TF1-W2	$781	L1	95	1.25	3.13	89.5	14.860	575	
		1800	182T	00318ET3HCT182T-W22	$781	L1	95	1.25	3.13	89.5	14.860	575	7
		1800	182T	00318ET3PCT182TF1-W2	$781	L1	96	1.25	8.99	89.5	14.860	200	
		1800	182T	00318ET3PCT182T-W22	$781	L1	96	1.25	8.99	89.5	14.860	200	7
		1200	213T	00312ET3ECT213T-W22	$1,329	L1	158	1.25	4.41	89.5	18.021	230/460	7
		1200	213T	00312ET3HCT213T-W22	$1,329	L1	152	1.25	3.53	89.5	19.517	575	7,51
		1200	213T	00312ET3PCT213T-W22	$1,329	L1	159	1.25	10.1	89.5	18.021	200	7
5	3.7	1800	182/4T	00518ET3ECT184TF1-W2	$894	L1	108	1.25	6.45	89.5	15.860	230/460	
		1800	182/4T	00518ET3ECT184T-W22	$894	L1	108	1.25	6.45	89.5	15.860	230/460	7
		1800	182/4T	00518ET3HCT184TF1-W2	$894	L1	108	1.25	5.16	89.5	15.860	575	
		1800	182/4T	00518ET3HCT184T-W22	$894	L1	108	1.25	5.16	89.5	15.860	575	7
		1800	182/4T	00518ET3PCT184TF1-W2	$894	L1	108	1.25	14.8	89.5	15.860	200	
		1800	182/4T	00518ET3PCT184T-W22	$894	L1	108	1.25	14.8	89.5	15.860	200	7
		1200	213/5T	00512ET3ECT215TF1-W2	$1,517	L1	175	1.25	6.83	89.5	19.517	230/460	
		1200	213/5T	00512ET3ECT215T-W22	$1,517	L1	183	1.25	6.83	89.5	19.517	230/460	7
		1200	213/5T	00512ET3HCT215T-W22	$1,517	L1	175	1.25	5.46	89.5	19.517	575	7,51
		1200	213/5T	00512ET3PCT215T-W22	$1,517	L1	184	1.25	15.7	89.5	19.517	200	7

continued on next page

Please refer to inside back cover for description of "NOTES"

For detailed specifications, data sheets, drawings and performance curves visit http:// www.weg.net

Data subject to change without notice.

TEFC - Three-Phase - Foot Mount - NEMA Premium® - *continued*

HP	kW	RPM	Frame	Catalog Number	List Price	Mult. Symbol	Approx. Shipping Weight (lbs)	Service Factor	FL Amps @ High	FL. Eff (%)	"C" Dimension (in)	Voltage (V)	Notes
7.5	5.5	1800	213T	00718ET3ECT213TF1-W2	$1,293	L1	171	1.25	9.18	91.7	18.021	230/460	
		1800	213T	00718ET3ECT213T-W22	$1,293	L1	171	1.25	9.18	91.7	18.021	230/460	7
		1800	213T	00718ET3HCT213TF1-W2	$1,293	L1	170	1.25	7.34	91.7	18.021	575	
		1800	213T	00718ET3HCT213T-W22	$1,293	L1	170	1.25	7.34	91.7	18.021	575	7
		1800	213T	00718ET3PCT213TF1-W2	$1,293	L1	171	1.25	21.1	91.7	18.021	200	
		1800	213T	00718ET3PCT213T-W22	$1,293	L1	171	1.25	21.1	91.7	18.021	200	7
		1200	254T	00712ET3ECT254T-W22	$2,433	L1	311	1.25	9.48	91.0	23.213	230/460	7
		1200	254T	00712ET3HCT254T-W22	$2,433	L1	299	1.25	7.58	91.0	23.213	575	7
		1200	254T	00712ET3PCT254T-W22	$2,433	L1	311	1.25	21.8	91.0	23.213	200	7
10	7.5	1800	213/5T	01018ET3ECT215TF1-W2	$1,475	L1	192	1.25	12.4	91.7	19.517	230/460	
		1800	213/5T	01018ET3ECT215T-W22	$1,475	L1	192	1.25	12.4	91.7	19.517	230/460	7
		1800	213/5T	01018ET3HCT215TF1-W2	$1,475	L1	192	1.25	9.92	91.7	19.517	575	
		1800	213/5T	01018ET3HCT215T-W22	$1,475	L1	192	1.25	9.92	91.7	19.517	575	7
		1800	213/5T	01018ET3PCT215TF1-W2	$1,475	L1	192	1.25	28.5	91.7	19.517	200	
		1800	213/5T	01018ET3PCT215T-W22	$1,475	L1	192	1.25	28.5	91.7	19.517	200	7
		1200	254/6T	01012ET3ECT256TF1-W2	$2,751	L1	331	1.25	12.9	91.0	24.945	230/460	
		1200	254/6T	01012ET3ECT256T-W22	$2,751	L1	331	1.25	12.9	91.0	24.945	230/460	7
		1200	254/6T	01012ET3HCT256T-W22	$2,751	L1	343	1.25	10.3	91.0	24.945	575	7,51
		1200	254/6T	01012ET3PCT256T-W22	$2,751	L1	331	1.25	29.7	91.0	24.945	200	7
15	11	1800	254T	01518ET3ECT254TF1-W2	$2,122	L1	341	1.25	18.0	92.4	23.213	230/460	
		1800	254T	01518ET3ECT254T-W22	$2,122	L1	341	1.25	18.0	92.4	23.213	230/460	7
		1800	254T	01518ET3HCT254TF1-W2	$2,122	L1	341	1.25	14.4	92.4	23.213	575	
		1800	254T	01518ET3HCT254T-W22	$2,122	L1	341	1.25	14.4	92.4	23.213	575	7
		1800	254T	01518ET3PCT254TF1-W2	$2,122	L1	342	1.25	41.4	92.4	23.213	200	
		1800	254T	01518ET3PCT254T-W22	$2,122	L1	342	1.25	41.4	92.4	23.213	200	7
		1200	284T	01512ET3ECT284T-W22	$3,850	L1	422	1.25	17.9	91.7	26.433	230/460	7
		1200	284T	01512ET3PCT284T-W22	$3,850	L1	423	1.25	41.2	91.7	26.433	200	7
20	15	1800	254/6T	02018ET3ECT256TF1-W2	$2,549	L1	403	1.25	24.1	93.0	24.945	230/460	
		1800	254/6T	02018ET3ECT256T-W22	$2,549	L1	387	1.25	24.1	93.0	24.945	230/460	7
		1800	254/6T	02018ET3HCT256TF1-W2	$2,549	L1	402	1.25	19.3	93.0	24.945	575	
		1800	254/6T	02018ET3HCT256T-W22	$2,549	L1	402	1.25	19.3	93.0	24.945	575	7
		1800	254/6T	02018ET3PCT256TF1-W2	$2,549	L1	403	1.25	55.4	93.0	24.945	200	
		1800	254/6T	02018ET3PCT256T-W22	$2,549	L1	403	1.25	55.4	93.0	24.945	200	7
		1200	284/6T	02012ET3ECT286T-W22	$4,635	L1	461	1.25	24.2	91.7	27.929	230/460	7
		1200	284/6T	02012ET3PCT286T-W22	$4,635	L1	503	1.25	55.7	91.7	27.929	200	7
25	18.5	1800	284T	02518ET3ECT284TF1-W2	$3,236	L1	441	1.25	29.5	93.6	26.433	230/460	
		1800	284T	02518ET3ECT284T-W22	$3,236	L1	441	1.25	29.5	93.6	26.433	230/460	7
		1800	284T	02518ET3HCT284TF1-W2	$3,236	L1	439	1.25	23.6	93.6	26.433	575	
		1800	284T	02518ET3HCT284T-W22	$3,236	L1	439	1.25	23.6	93.6	26.433	575	7
		1800	284T	02518ET3PCT284TF1-W2	$3,236	L1	440	1.25	67.9	93.6	26.433	200	
		1800	284T	02518ET3PCT284T-W22	$3,236	L1	440	1.25	67.9	93.6	26.433	200	7
		1200	324T	02512ET3ECT324T-W22	$5,543	L1	575	1.25	30.4	93.0	29.620	230/460	7
		1200	324T	02512ET3PCT324T-W22	$5,543	L1	574	1.25	69.9	93.0	29.620	200	7

continued on next page

Please refer to inside back cover for description of "NOTES"

For detailed specifications, data sheets, drawings and performance curves visit http:// www.weg.net

COOLING TOWER MOTORS - THREE-PHASE

TEFC - Three-Phase - Foot Mount - NEMA Premium® - *continued*

HP	kW	RPM	Frame	Catalog Number	List Price	Mult. Symbol	Approx. Shipping Weight (lbs)	Service Factor	FL Amps @ High	FL. Eff (%)	"C" Dimension (in)	Voltage (V)	Notes
30	22	1800	284/6T	03018ET3ECT286TF1-W2	$3,738	L1	490	1.25	35.1	93.6	27.929	230/460	
		1800	284/6T	03018ET3ECT286T-W22	$3,738	L1	490	1.25	35.1	93.6	27.929	230/460	7
		1800	284/6T	03018ET3HCT286TF1-W2	$3,738	L1	489	1.25	28.1	93.6	27.929	575	
		1800	284/6T	03018ET3HCT286T-W22	$3,738	L1	489	1.25	28.1	93.6	27.929	575	7
		1800	284/6T	03018ET3PCT286TF1-W2	$3,738	L1	491	1.25	80.7	93.6	27.929	200	
		1800	284/6T	03018ET3PCT286T-W22	$3,738	L1	491	1.25	80.7	93.6	27.929	200	7
		1200	324/6T	03012ET3ECT326T-W22	$6,064	L1	673	1.25	36.2	93.0	31.116	230/460	7
		1200	324/6T	03012ET3PCT326T-W22	$6,064	L1	634	1.25	83.3	93.0	31.116	200	7
40	30	1800	324T	04018ET3ECT324TF1-W2	$4,805	L1	605	1.25	47.1	94.1	29.620	230/460	
		1800	324T	04018ET3ECT324T-W22	$4,805	L1	605	1.25	47.1	94.1	29.620	230/460	7
		1800	324T	04018ET3HCT324TF1-W2	$4,805	L1	603	1.25	37.7	94.1	29.620	575	
		1800	324T	04018ET3HCT324T-W22	$4,805	L1	603	1.25	37.7	94.1	29.620	575	7
		1800	324T	04018ET3PCT324TF1-W2	$4,805	L1	606	1.25	108	94.1	29.620	200	
		1800	324T	04018ET3PCT324T-W22	$4,805	L1	606	1.25	108	94.1	29.620	200	7
		1200	364/5T	04012ET3ECT364T-W22	$8,376	L1	1003	1.25	46.5	94.1	34.251	230/460	7
		1200	364/5T	04012ET3PCT364T-W22	$8,376	L1	1076	1.25	107	94.1	34.251	200	7
50	37	1800	324/6T	05018ET3ECT326TF1-W2	$5,865	L1	644	1.25	59.2	94.5	31.116	230/460	
		1800	324/6T	05018ET3ECT326T-W22	$5,865	L1	643	1.25	59.2	94.5	31.116	230/460	7
		1800	324/6T	05018ET3HCT326TF1-W2	$5,865	L1	644	1.25	47.4	94.5	31.116	575	
		1800	324/6T	05018ET3HCT326T-W22	$5,865	L1	644	1.25	47.4	94.5	31.116	575	7,51
		1800	324/6T	05018ET3PCT326T-W22	$5,865	L1	662	1.25	136	94.5	31.116	200	7
		1200	364/5T	05012ET3ECT365T-W22	$9,625	L1	1020	1.25	57.4	94.1	34.251	230/460	7
		1200	364/5T	05012ET3PCT365T-W22	$9,625	L1	1127	1.25	132	94.1	34.251	200	7
60	45	1800	364/5T	06018ET3ECT364TF1-W2	$8,497	L1	1009	1.25	68.3	95.0	34.251	230/460	
		1800	364/5T	06018ET3ECT364T-W22	$8,497	L1	1029	1.25	68.3	95.0	34.251	230/460	7
		1800	364/5T	06018ET3HCT364TF1-W2	$8,497	L1	1009	1.25	54.6	95.0	34.251	575	
		1800	364/5T	06018ET3HCT364T-W22	$8,497	L1	1009	1.25	54.6	95.0	34.251	575	7
		1800	364/5T	06018ET3PCT364T-W22	$8,497	L1	1036	1.25	157	95.0	34.251	200	7,51
		1200	404/5T	06012ET3ECT404T-W22	$11,861	L1	1272	1.25	69.5	94.5	39.730	230/460	7
		1200	404/5T	06012ET3PCT404T-W22	$11,861	L1	1346	1.25	160	94.5	39.730	200	7
75	55	1800	364/5T	07518ET3ECT365TF1-W2	$9,924	L1	1007	1.25	84.1	95.4	34.251	230/460	
		1800	364/5T	07518ET3ECT365T-W22	$9,924	L1	1046	1.25	84.1	95.4	34.251	230/460	7
		1800	364/5T	07518ET3HCT365T-W22	$9,924	L1	1007	1.25	67.3	95.4	34.251	575	7,51
		1800	364/5T	07518ET3PCT365T-W22	$9,924	L1	1047	1.25	193	95.4	34.251	200	7
		1200	404/5T	07512ET3ECT405T-W22	$13,626	L1	1243	1.25	84.9	94.5	39.730	230/460	7
		1200	404/5T	07512ET3PCT405T-W22	$13,626	L1	1478	1.25	195	94.5	39.730	200	7
100	75	1800	404/5T	10018ET3ECT405T-W22	$13,092	L1	1303	1.25	111	95.4	39.730	230/460	7
		1800	404/5T	10018ET3PCT405T-W22	$13,092	L1	1302	1.25	255	95.4	39.730	200	7
		1200	444/5T	10012ET3ECT444T-W22	$17,194	L1	2006	1.25	121	95.0	44.950	230/460	7
		1200	444/5T	10012ET3PCT444T-W22	$17,194	L1	2006	1.25	278	95.0	44.950	200	7

Please refer to inside back cover for description of "NOTES"

For detailed specifications, data sheets, drawings and performance curves visit http:// www.weg.net

Data subject to change without notice.

TEAO - Three-Phase - Foot Mount - NEMA Premium®

HP	kW	RPM	Frame	Catalog Number	List Price	Mult. Symbol	Approx. Shipping Weight (lbs)	Service Factor	FL Amps @ High	FL. Eff (%)	"C" Dimension (in)	Voltage (V)	Notes
1	0.75	1800	143T	00118AT3PCT143T-W22	$666	L1	54	1.25	3.38	85.5	12.353	200	7
1.5	1.1	1800	143/5T	00158AT3PCT145T-W22	$696	L1	56	1.25	4.65	86.5	13.338	200	7
2	1.5	1800	143/5T	00218AT3ECT145TF1-W2	$775	L1	58	1.25	2.76	86.5	13.338	230/460	
		1800	143/5T	00218AT3ECT145T-W22	$775	L1	58	1.25	2.76	86.5	13.338	230/460	7
		1800	143/5T	00218AT3PCT145T-W22	$775	L1	58	1.25	6.35	86.5	13.338	200	7
		1200	182/4T	00212AT3ECT184TF1-W2	$1,010	L1	105	1.25	3.23	88.5	15.298	230/460	
		1200	182/4T	00212AT3ECT184T-W22	$1,010	L1	97	1.25	3.23	88.5	15.298	230/460	
		1200	182/4T	00212AT3HCT184TF1-W2	$1,010	L1	97	1.25	2.58	88.5	15.298	575	
		1200	182/4T	00212AT3HCT184T-W22	$1,010	L1	97	1.25	2.58	88.5	15.298	575	7
		1200	182/4T	00212AT3PCT184TF1-W2	$1,010	L1	106	1.25	7.43	88.5	15.298	200	
		1200	182/4T	00212AT3PCT184T-W22	$1,010	L1	97	1.25	7.43	88.5	15.298	200	7,51
3	2.2	1800	182T	00318AT3ECT182TF1-W2	$804	L1	94	1.25	3.91	89.5	14.298	230/460	
		1800	182T	00318AT3ECT182T-W22	$804	L1	94	1.25	3.91	89.5	14.298	230/460	7
		1800	182T	00318AT3HCT182T-W22	$804	L1	96	1.25	3.13	89.5	14.298	575	7
		1800	182T	00318AT3PCT182TF1-W2	$804	L1	99	1.25	8.99	89.5	14.298	200	
		1800	182T	00318AT3PCT182T-W22	$804	L1	94	1.25	8.99	89.5	14.298	200	7
		1200	213T	00312AT3ECT213TF1-W2	$1,369	L1	157	1.25	4.41	89.5	17.239	230/460	
		1200	213T	00312AT3ECT213T-W22	$1,369	L1	134	1.25	4.41	89.5	17.239	230/460	7
		1200	213T	00312AT3HCT213T-W22	$1,369	L1	134	1.25	3.53	89.5	17.239	575	7
		1200	213T	00312AT3PCT213TF1-W2	$1,369	L1	159	1.25	10.1	89.5	17.239	200	
		1200	213T	00312AT3PCT213T-W22	$1,369	L1	134	1.25	10.1	89.5	17.239	200	7
5	3.7	1800	182/4T	00518AT3ECT184TF1-W2	$921	L1	107	1.25	6.45	89.5	15.298	230/460	
		1800	182/4T	00518AT3ECT184T-W22	$921	L1	107	1.25	6.45	89.5	15.298	230/460	7
		1800	182/4T	00518AT3HCT184TF1-W2	$921	L1	107	1.25	5.16	89.5	15.298	575	
		1800	182/4T	00518AT3HCT184T-W22	$921	L1	104	1.25	5.16	89.5	15.298	575	7
		1800	182/4T	00518AT3PCT184TF1-W2	$921	L1	107	1.25	14.8	89.5	15.298	200	
		1800	182/4T	00518AT3PCT184T-W22	$921	L1	107	1.25	14.8	89.5	15.298	200	7
		1200	213/5T	00512AT3ECT215TF1-W2	$1,563	L1	182	1.25	6.83	89.5	18.739	230/460	
		1200	213/5T	00512AT3ECT215T-W22	$1,563	L1	175	1.25	6.83	89.5	18.739	230/460	7
		1200	213/5T	00512AT3HCT215TF1-W2	$1,563	L1	175	1.25	5.46	89.5	18.739	575	
		1200	213/5T	00512AT3HCT215T-W22	$1,563	L1	175	1.25	5.46	89.5	18.739	575	7
		1200	213/5T	00512AT3PCT215TF1-W2	$1,563	L1	183	1.25	15.7	89.5	18.739	200	
		1200	213/5T	00512AT3PCT215T-W22	$1,563	L1	175	1.25	15.7	89.5	18.739	200	7
7.5	5.5	1800	213T	00718AT3ECT213TF1-W2	$1,332	L1	170	1.25	9.18	91.7	17.239	230/460	
		1800	213T	00718AT3ECT213T-W22	$1,332	L1	170	1.25	9.18	91.7	17.239	230/460	7
		1800	213T	00718AT3HCT213TF1-W2	$1,332	L1	169	1.25	7.34	91.7	17.239	575	
		1800	213T	00718AT3HCT213T-W22	$1,332	L1	169	1.25	7.34	91.7	17.239	575	7
		1800	213T	00718AT3PCT213TF1-W2	$1,332	L1	170	1.25	21.1	91.7	17.239	200	
		1800	213T	00718AT3PCT213T-W22	$1,332	L1	170	1.25	21.1	91.7	17.239	200	7
		1200	254T	00712AT3ECT254TF1-W2	$2,506	L1	297	1.25	9.48	91.0	21.594	230/460	39
		1200	254T	00712AT3PCT254TF1-W2	$2,506	L1	299	1.25	21.8	91.0	21.594	200	39

continued on next page

Please refer to inside back cover for description of "NOTES"

For detailed specifications, data sheets, drawings and performance curves visit http:// www.weg.net

COOLING TOWER MOTORS - THREE-PHASE

TEAO - Three-Phase - Foot Mount - NEMA Premium® - *continued*

HP	kW	RPM	Frame	Catalog Number	List Price	Mult. Symbol	Approx. Shipping Weight (lbs)	Service Factor	FL Amps @ High	FL. Eff (%)	"C" Dimension (in)	Voltage (V)	Notes
10	7.5	1800	213/5T	01018AT3ECT215TF1-W2	$1,519	L1	192	1.25	12.4	91.7	18.739	230/460	
		1800	213/5T	01018AT3ECT215T-W22	$1,519	L1	192	1.25	12.4	91.7	18.739	230/460	7
		1800	213/5T	01018AT3HCT215TF1-W2	$1,519	L1	191	1.25	9.92	91.7	18.739	575	
		1800	213/5T	01018AT3HCT215T-W22	$1,519	L1	191	1.25	9.92	91.7	18.739	575	7
		1800	213/5T	01018AT3PCT215TF1-W2	$1,519	L1	191	1.25	28.5	91.7	18.739	200	
		1800	213/5T	01018AT3PCT215T-W22	$1,519	L1	191	1.25	28.5	91.7	18.739	200	7
		1200	254/6T	01012AT3ECT256TF1-W2	$2,919	L1	317	1.25	12.9	91.0	23.343	230/460	
		1200	254/6T	01012AT3PCT256TF1-W2	$2,919	L1	333	1.25	29.7	91.0	23.343	200	
		1200	254/6T	01012AT3PCT256T-W22	$2,919	L1	333	1.25	29.7	91.0	23.343	200	7
15	11	1800	254T	01518AT3ECT254TF1-W2	$2,186	L1	327	1.25	18.0	92.4	21.594	230/460	
		1800	254T	01518AT3ECT254T-W22	$2,186	L1	327	1.25	18.0	92.4	21.594	230/460	7
		1800	254T	01518AT3HCT254TF1-W2	$2,186	L1	327	1.25	14.4	92.4	21.594	575	
		1800	254T	01518AT3HCT254T-W22	$2,186	L1	327	1.25	14.4	92.4	21.594	575	7
		1800	254T	01518AT3PCT254TF1-W2	$2,186	L1	328	1.25	41.4	92.4	21.594	200	
		1800	254T	01518AT3PCT254T-W22	$2,186	L1	328	1.25	41.4	92.4	21.594	200	7
		1200	284T	01512AT3ECT284TF1-W2	$3,965	L1	420	1.25	17.9	91.7	25.418	230/460	
20	15	1800	254/6T	02018AT3ECT256TF1-W2	$2,625	L1	389	1.25	24.1	93.0	23.343	230/460	
		1800	254/6T	02018AT3ECT256T-W22	$2,625	L1	389	1.25	24.1	93.0	23.343	230/460	7
		1800	254/6T	02018AT3HCT256TF1-W2	$2,625	L1	388	1.25	19.3	93.0	23.343	575	
		1800	254/6T	02018AT3HCT256T-W22	$2,625	L1	388	1.25	19.3	93.0	23.343	575	7
		1800	254/6T	02018AT3PCT256TF1-W2	$2,625	L1	389	1.25	55.4	93.0	23.343	200	
		1800	254/6T	02018AT3PCT256T-W22	$2,625	L1	389	1.25	55.4	93.0	23.343	200	7
		1200	284/6T	02012AT3ECT286TF1-W2	$4,576	L1	443	1.25	24.2	91.7	26.918	230/460	
25	18.5	1800	284T	02518AT3ECT284TF1-W2	$3,333	L1	423	1.25	29.5	93.6	25.418	230/460	
		1800	284T	02518AT3ECT284T-W22	$3,333	L1	423	1.25	29.5	93.6	25.418	230/460	7
		1800	284T	02518AT3HCT284TF1-W2	$3,333	L1	422	1.25	23.6	93.6	25.418	575	
		1800	284T	02518AT3HCT284T-W22	$3,333	L1	422	1.25	23.6	93.6	25.418	575	7
		1800	284T	02518AT3PCT284TF1-W2	$3,333	L1	422	1.25	67.9	93.6	25.418	200	
		1800	284T	02518AT3PCT284T-W22	$3,333	L1	422	1.25	67.9	93.6	25.418	200	7
		1200	324T	02512AT3ECT324TF1-W2	$5,709	L1	555	1.25	30.4	93.0	28.575	230/460	
		1200	324T	02512AT3HCT324TF1-W2	$5,709	L1	605	1.25	24.3	93.0	28.575	575	
30	22	1800	284/6T	03018AT3ECT286TF1-W2	$3,850	L1	473	1.25	35.1	93.6	26.918	230/460	
		1800	284/6T	03018AT3ECT286T-W22	$3,850	L1	473	1.25	35.1	93.6	26.918	230/460	7
		1800	284/6T	03018AT3HCT286TF1-W2	$3,850	L1	471	1.25	28.1	93.6	26.918	575	
		1800	284/6T	03018AT3HCT286T-W22	$3,850	L1	469	1.25	28.1	93.6	26.918	575	7
		1800	284/6T	03018AT3PCT286TF1-W2	$3,850	L1	473	1.25	80.7	93.6	26.918	200	
		1800	284/6T	03018AT3PCT286T-W22	$3,850	L1	473	1.25	80.7	93.6	26.918	200	7
		1200	324/6T	03012AT3PCT326TF1-W2	$6,246	L1	673	1.25	83.3	93.0	30.071	200	
40	30	1800	324T	04018AT3ECT324TF1-W2	$4,949	L1	586	1.25	47.1	94.1	28.575	230/460	
		1800	324T	04018AT3ECT324T-W22	$4,949	L1	586	1.25	47.1	94.1	28.575	230/460	7
		1800	324T	04018AT3HCT324TF1-W2	$4,949	L1	584	1.25	37.7	94.1	28.575	575	
		1800	324T	04018AT3HCT324T-W22	$4,949	L1	580	1.25	37.7	94.1	28.575	575	7
		1800	324T	04018AT3PCT324TF1-W2	$4,949	L1	576	1.25	108	94.1	28.575	200	
		1800	324T	04018AT3PCT324T-W22	$4,949	L1	581	1.25	108	94.1	28.575	200	7
50	37	1800	324/6T	05018AT3ECT326T-W22	$6,041	L1	662	1.25	59.2	94.5	30.071	230/460	7
		1800	324/6T	05018AT3HCT326T-W22	$6,041	L1	662	1.25	47.3	94.5	30.071	575	7
		1800	324/6T	05018AT3PCT326T-W22	$6,041	L1	662	1.25	136	94.5	30.071	200	7
60	45	1800	364/5T	06018AT3ECT364T-W22	$8,752	L1	1036	1.25	68.3	95.0	29.390	230/460	7
75	55	1800	364/5T	07518AT3ECT365T-W22	$10,222	L1	1047	1.25	84.1	95.4	29.390	230/460	7
100	75	1800	404/5T	10018AT3ECT405TF1-W2	$11,412	L1	1268	1.25	87.2	95.4	36.417	230/460	
		1800	404/5T	10018AT3ECT405T-W22	$11,412	L1	1268	1.25	87.2	95.4	36.417	230/460	7

Please refer to inside back cover for description of "NOTES"

For detailed specifications, data sheets, drawings and performance curves visit http:// www.weg.net

Data subject to change without notice.

TEFC - Dual Speed (1 & 2 Windings) - High Efficiency

HP	kW	RPM	Frame	Catalog Number	List Price	Mult. Symbol	Approx. Shipping Weight (lbs)	Service Factor	FL Amps @ High	FL. Eff (%)	"C" Dimension (in)	Voltage (V)	Notes
2/0.50	1.5/0.37	1800/900	143/5T	**00289EP3PCT145VF1-W2**	**$929**	H1	53	1.25	6.40	82.5	13.358	200	23;30
		1800/900	143/5T	**00289EP3PCT145V-W22**	**$929**	H1	56	1.25	6.40	82.5	13.358	200	7;23;30
3/0.75	2.2/0.55	1800/900	182T	**00389EP3QCT182VF1-W2**	**$1,369**	H1	100	1.25	3.99	87.5	14.860	460	23;30
		1800/900	182T	**00389EP3QCT182V-W22**	**$1,369**	H1	94	1.25	3.99	87.5	14.860	460	7;23;30
		1800/900	182T	**00389EP3PCT182VF1-W2**	**$1,369**	H1	95	1.25	9.18	87.5	14.860	200	23;30
		1800/900	182T	**00389EP3PCT182V-W22**	**$1,369**	H1	100	1.25	9.18	87.5	14.860	200	7;23;30
5/1.25	3.7/0.92	1800/900	182/4T	**00589EP3QCT184VF1-W2**	**$1,471**	H1	105	1.25	6.63	87.5	15.860	460	23;30
		1800/900	182/4T	**00589EP3QCT184V-W22**	**$1,471**	H1	104	1.25	6.63	87.5	15.860	460	7;23;30
		1800/900	182/4T	**00589EP3HCT184VF1-W2**	**$1,471**	H1	104	1.25	5.30	87.5	15.860	575	23;30
		1800/900	182/4T	**00589EP3HCT184V-W22**	**$1,471**	H1	104	1.25	5.30	87.5	15.860	575	7;23;30
		1800/900	182/4T	**00589EP3PCT184VF1-W2**	**$1,471**	H1	104	1.25	15.2	87.5	15.860	200	23;30
		1800/900	182/4T	**00589EP3PCT184V-W22**	**$1,471**	H1	104	1.25	15.2	87.5	15.860	200	7;23;30
		1800/900	213/5T	**00589EP3QCT215V2F1-W**	**$2,262**	H1	181	1.25	6.55	88.5	19.517	460	22;30
		1800/900	213/5T	**00589EP3QCT215V2-W22**	**$2,262**	H1	181	1.25	6.55	88.5	19.517	460	7;22;30
		1800/900	213/5T	**00589EP3PCT215V2F1-W**	**$2,262**	H1	181	1.25	15.1	88.5	19.517	200	22;30
7.5/1.75	5.5/1.3	1800/900	213T	**00789EP3QCT213VF1-W2**	**$1,672**	H1	168	1.25	9.51	88.5	18.021	460	23;30
		1800/900	213T	**00789EP3QCT213V-W22**	**$1,672**	H1	168	1.25	9.51	88.5	18.021	460	7;23;30
		1800/900	213T	**00789EP3HCT213V-W22**	**$1,672**	H1	164	1.25	7.61	88.5	18.021	575	7;23;30
		1800/900	213T	**00789EP3PCT213VF1-W2**	**$1,672**	H1	164	1.25	21.9	88.5	18.021	200	23;30
		1800/900	213T	**00789EP3PCT213V-W22**	**$1,672**	H1	164	1.25	21.9	88.5	18.021	200	7;23;30
		1800/900	254T	**00789EP3QCT254V2F1-W**	**$2,808**	H1	302	1.25	9.75	88.5	23.213	460	22;30
		1800/900	254T	**00789EP3QCT254V2-W22**	**$2,808**	H1	302	1.25	9.75	88.5	23.213	460	7;22;30
		1800/900	254T	**00789EP3PCT254V2F1-W**	**$2,808**	H1	302	1.25	22.4	88.5	23.213	200	22;30
		1800/900	254T	**00789EP3PCT254V2-W22**	**$2,808**	H1	302	1.25	22.4	88.5	23.213	200	7;22;30
10/2.5	7.5/1.85	1800/900	213/5T	**01089EP3QCT215VF1-W2**	**$1,891**	H1	181	1.25	13.0	88.5	19.517	460	23;30
		1800/900	213/5T	**01089EP3QCT215V-W22**	**$1,891**	H1	181	1.25	13.0	88.5	19.517	460	7;23;30
		1800/900	213/5T	**01089EP3HCT215VF1-W2**	**$1,891**	H1	168	1.25	10.4	88.5	19.517	575	23;30
		1800/900	213/5T	**01089EP3HCT215V-W22**	**$1,891**	H1	168	1.25	10.4	88.5	19.517	575	7;23;30
		1800/900	213/5T	**01089EP3PCT215VF1-W2**	**$1,891**	H1	168	1.25	29.9	88.5	19.517	200	23;30
		1800/900	213/5T	**01089EP3PCT215V-W22**	**$1,891**	H1	168	1.25	29.9	88.5	19.517	200	7;23;30
		1800/900	254/6T	**01089EP3QCT256V2F1-W**	**$3,052**	H1	346	1.25	13.0	89.5	24.945	460	22;30
		1800/900	254/6T	**01089EP3QCT256V2-W22**	**$3,052**	H1	363	1.25	13.0	89.5	24.945	460	7;22;30
		1800/900	254/6T	**01089EP3PCT256V2F1-W**	**$3,052**	H1	346	1.25	29.9	89.5	24.945	200	22;30
		1800/900	254/6T	**01089EP3PCT256V2-W22**	**$3,052**	H1	346	1.25	29.9	89.5	24.945	200	7;22;30

continued on next page

Please refer to inside back cover for description of "NOTES"

For detailed specifications, data sheets, drawings and performance curves visit http:// www.weg.net

TEFC - Dual Speed (1 & 2 Windings) - High Efficiency - *continued*

HP	kW	RPM	Frame	Catalog Number	List Price	Mult. Symbol	Approx. Shipping Weight (lbs)	Service Factor	FL Amps @ High	FL. Eff (%)	"C" Dimension (in)	Voltage (V)	Notes
15/3.75	11/2.8	1800/900	254T	**01589EP3QCT254VF1-W2**	**$2,572**	H1	324	1.25	19.0	89.5	23.213	460	23;30
		1800/900	254T	**01589EP3QCT254V-W22**	**$2,572**	H1	324	1.25	19.0	89.5	23.213	460	7;23;30
		1800/900	254T	**01589EP3HCT254VF1-W2**	**$2,572**	H1	324	1.25	15.2	89.5	23.213	575	23;30
		1800/900	254T	**01589EP3HCT254V-W22**	**$2,572**	H1	288	1.25	15.2	89.5	23.213	575	7;23;30
		1800/900	254T	**01589EP3PCT254VF1-W2**	**$2,572**	H1	288	1.25	43.8	89.5	23.213	200	23;30
		1800/900	254T	**01589EP3PCT254V-W22**	**$2,572**	H1	288	1.25	43.8	89.5	23.213	200	7;23;30
		1800/900	284T	**01589EP3QCT284V2F1-W**	**$3,878**	H1	439	1.25	18.7	90.2	26.433	460	22;30
		1800/900	284T	**01589EP3QCT284V2-W22**	**$3,878**	H1	435	1.25	18.7	90.2	26.433	460	7;22;30
		1800/900	284T	**01589EP3PCT284V2F1-W**	**$3,878**	H1	435	1.25	43.0	90.2	26.433	200	22;30
		1800/900	284T	**01589EP3PCT284V2-W22**	**$3,878**	H1	435	1.25	43.0	90.2	26.433	200	7;22;30
		1200/600	284/6T	**01526EP3PCT286V-W22**	**$3,274**	H1	271	1.15	41.4	90.2	27.929	200	7;23;30
20/5	15/3.7	1800/900	254/6T	**02089EP3QCT256VF1-W2**	**$2,923**	H1	360	1.25	26.1	90.2	24.945	460	23;30
		1800/900	254/6T	**02089EP3QCT256V-W22**	**$2,923**	H1	360	1.25	26.1	90.2	24.945	460	7;23;30
		1800/900	254/6T	**02089EP3HCT256VF1-W2**	**$2,923**	H1	335	1.25	20.9	90.2	24.945	575	23;30;51
		1800/900	254/6T	**02089EP3HCT256V-W22**	**$2,923**	H1	335	1.25	20.9	90.2	24.945	575	7;23;30
		1800/900	254/6T	**02089EP3PCT256VF1-W2**	**$2,923**	H1	362	1.25	60.0	90.2	24.945	200	23;30
		1800/900	254/6T	**02089EP3PCT256V-W22**	**$2,923**	H1	335	1.25	60.0	90.2	24.945	200	7;23;30
		1800/900	284/6T	**02089EP3QCT286V2F1-W**	**$4,827**	H1	503	1.25	24.9	91.0	27.929	460	22;30
		1800/900	284/6T	**02089EP3QCT286V2-W22**	**$4,827**	H1	503	1.25	24.9	91.0	27.929	460	7;22;30
		1800/900	284/6T	**02089EP3PCT286V2F1-W**	**$4,827**	H1	512	1.25	57.3	91.0	27.929	200	22;30
		1800/900	284/6T	**02089EP3PCT286V2-W22**	**$4,827**	H1	512	1.25	57.3	91.0	27.929	200	7;22;30
25/6.3	18.5/4.6	1800/900	284/6T	**02589EP3QCT286VF1-W2**	**$4,199**	H1	500	1.25	29.4	91.7	27.929	460	23;30
		1800/900	284/6T	**02589EP3QCT286V-W22**	**$4,199**	H1	512	1.25	29.4	91.7	27.929	460	7;23;30
		1800/900	284/6T	**02589EP3HCT286VF1-W2**	**$4,199**	H1	500	1.25	23.5	91.7	27.929	575	23;30
		1800/900	284/6T	**02589EP3HCT286V-W22**	**$4,199**	H1	512	1.25	23.5	91.7	27.929	575	7;23;30
		1800/900	284/6T	**02589EP3PCT286VF1-W2**	**$4,199**	H1	512	1.25	67.6	91.7	27.929	200	23;30
		1800/900	324T	**02589EP3QCT324V2F1-W**	**$5,826**	H1	531	1.25	30.9	91.7	29.620	460	22;30
		1800/900	324T	**02589EP3QCT324V2-W22**	**$5,826**	H1	580	1.25	30.9	91.7	29.620	460	7;22;30
		1800/900	324T	**02589EP3PCT324V2F1-W**	**$5,826**	H1	531	1.25	71.1	91.7	29.620	200	22;30
		1800/900	324T	**02589EP3PCT324V2-W22**	**$5,826**	H1	531	1.25	71.1	91.7	29.620	200	7;22;30

continued on next page

Please refer to inside back cover for description of "NOTES"

For detailed specifications, data sheets, drawings and performance curves visit http:// www.weg.net

Data subject to change without notice.

TEFC - Dual Speed (1 & 2 Windings) - High Efficiency - *continued*

HP	kW	RPM	Frame	Catalog Number	List Price	Mult. Symbol	Approx. Shipping Weight (lbs)	Service Factor	FL Amps @ High	FL. Eff (%)	"C" Dimension (in)	Voltage (V)	Notes
30/7.5	22/5.5	1800/900	324T	**03089EP3QCT324VF1-W2**	**$4,725**	H1	578	1.25	37.2	91.7	29.620	460	23;30
		1800/900	324T	**03089EP3QCT324V-W22**	**$4,725**	H1	578	1.25	37.2	91.7	29.620	460	7;23;30
		1800/900	324T	**03089EP3HCT324VF1-W2**	**$4,725**	H1	542	1.25	29.8	91.7	29.620	575	23;30
		1800/900	324T	**03089EP3HCT324V-W22**	**$4,725**	H1	542	1.25	29.8	91.7	29.620	575	7;23;30
		1800/900	324T	**03089EP3PCT324VF1-W2**	**$4,725**	H1	581	1.25	85.5	91.7	29.620	200	23;30
		1800/900	324T	**03089EP3PCT324V-W22**	**$4,725**	H1	542	1.25	85.5	91.7	29.620	200	7;23;30
		1800/900	324/6T	**03089EP3QCT326V2F1-W**	**$6,995**	H1	625	1.25	37.4	92.4	31.116	460	22;30
		1800/900	324/6T	**03089EP3QCT326V2-W22**	**$6,995**	H1	625	1.25	37.4	92.4	31.116	460	7;22;30
		1800/900	324/6T	**03089EP3PCT326V2F1-W**	**$6,995**	H1	625	1.25	86.0	92.4	31.116	200	22;30
		1800/900	324/6T	**03089EP3PCT326V2-W22**	**$6,995**	H1	625	1.25	86.0	92.4	31.116	200	7;22;30
		1200/600	364/5T	**03026EP3QCT364V-W22**	**$7,435**	H1	542	1.15	35.4	91.7	34.251	460	7;23;30
40/10	30/7.5	1800/900	324/6T	**04089EP3QCT326VF1-W2**	**$5,464**	H1	640	1.25	47.9	92.4	31.116	460	23;30
		1800/900	324/6T	**04089EP3QCT326V-W22**	**$5,464**	H1	625	1.25	47.9	92.4	31.116	460	7;23;30
		1800/900	324/6T	**04089EP3HCT326VF1-W2**	**$5,464**	H1	625	1.25	38.3	92.4	31.116	575	23;30,51
		1800/900	324/6T	**04089EP3HCT326V-W22**	**$5,464**	H1	625	1.25	38.3	92.4	31.116	575	7;23;30
		1800/900	324/6T	**04089EP3PCT326VF1-W2**	**$5,464**	H1	625	1.25	110	92.4	31.116	200	23;30
		1800/900	324/6T	**04089EP3PCT326V-W22**	**$5,464**	H1	625	1.25	110	92.4	31.116	200	7;23;30
		1800/900	364/5T	**04089EP3QCT364V2F1-W**	**$8,720**	H1	986	1.25	46.8	92.4	34.251	460	22;30
		1800/900	364/5T	**04089EP3QCT364V2-W22**	**$8,720**	H1	1029	1.25	46.8	92.4	34.251	460	7;22;30
		1800/900	364/5T	**04089EP3PCT364V2F1-W**	**$8,720**	H1	1029	1.25	108	92.4	34.251	200	22;30,51
		1800/900	364/5T	**04089EP3PCT364V2-W22**	**$8,720**	H1	1029	1.25	108	92.4	34.251	200	7;22;30
50/12.5	37/9.2	1800/900	364/5T	**05089EP3QCT364VF1-W2**	**$7,526**	H1	968	1.25	59.8	92.4	34.251	460	23;30
		1800/900	364/5T	**05089EP3QCT364V-W22**	**$7,526**	H1	968	1.25	59.8	92.4	34.251	460	7;23;30
		1800/900	364/5T	**05089EP3QCT365V2F1-W**	**$11,093**	H1	1042	1.25	57.0	92.5	34.251	460	22;30
		1800/900	364/5T	**05089EP3QCT365V2-W22**	**$11,093**	H1	1102	1.25	57.0	92.5	34.251	460	7;22;30
		1800/900	364/5T	**05089EP3HCT364VF1-W2**	**$7,526**	H1	1051	1.25	47.8	92.4	34.251	575	23;30
		1800/900	364/5T	**05089EP3HCT364V-W22**	**$7,526**	H1	1051	1.25	47.8	92.4	34.251	575	7;23;30
		1800/900	364/5T	**05089EP3PCT364VF1-W2**	**$7,526**	H1	1051	1.25	138	92.4	34.251	200	23;30
		1800/900	364/5T	**05089EP3PCT364V-W22**	**$7,526**	H1	1051	1.25	138	92.4	34.251	200	7;23;30
		1800/900	364/5T	**05089EP3PCT365V2F1-W**	**$11,093**	H1	1102	1.25	131	92.5	34.251	200	22;30
		1800/900	364/5T	**05089EP3PCT365V2-W22**	**$11,093**	H1	1102	1.25	131	92.5	34.251	200	7;22;30
60/15	45/11	1800/900	364/5T	**06089EP3QCT365VF1-W2**	**$11,068**	H1	997	1.25	72.3	93.0	34.251	460	23;30
		1800/900	364/5T	**06089EP3QCT365V-W22**	**$11,068**	H1	1015	1.25	72.3	93.0	34.251	460	7;23;30
		1800/900	364/5T	**06089EP3PCT365VF1-W2**	**$11,068**	H1	1102	1.25	166	93.0	34.251	200	23;30
		1800/900	364/5T	**06089EP3PCT365V-W22**	**$11,068**	H1	1102	1.25	166	93.0	34.251	200	7;23;30
75/18.5	55/13.6	1800/900	404/5T	**07589EP3QCT404VF1-W2**	**$14,226**	H1	1294	1.25	85.3	93.0	39.730	460	23;30
		1800/900	404/5T	**07589EP3QCT404V-W22**	**$14,226**	H1	1294	1.25	85.3	93.0	39.730	460	7;23;30
		1800/900	404/5T	**07589EP3PCT404VF1-W2**	**$14,226**	H1	1245	1.25	196	93.0	39.730	200	23;30
		1800/900	404/5T	**07589EP3PCT404V-W22**	**$14,226**	H1	1245	1.25	196	93.0	39.730	200	7;23;30
100/25	75/18.5	1800/900	444/5T	**10089EP3QCT444VF1-W2**	**$16,398**	H1	2149	1.25	119	94.1	44.950	460	23;30
		1800/900	444/5T	**10089EP3QCT444V-W22**	**$16,398**	H1	2162	1.25	119	94.1	44.950	460	7;23;30
		1800/900	444/5T	**10089EP3PCT444VF1-W2**	**$16,398**	H1	2149	1.25	274	94.1	44.950	200	23;30
		1800/900	444/5T	**10089EP3PCT444V-W22**	**$16,398**	H1	2149	1.25	274	94.1	44.950	200	7;23;30

Please refer to inside back cover for description of "NOTES"

For detailed specifications, data sheets, drawings and performance curves visit http:// www.weg.net

Air Handling Motors

PAD MOUNT MOTORS

Three-Phase TEAO - NEMA Premium®

These TEAO motors are supplied with a detached terminal box and extended leads for remote installation.

Standard Features:

- Footless, pad mount frame
- Class F insulation (impregnation resin and magnet wire are Class H)
- NEMA Premium Efficiency
- Stainless Steel Nameplate – Laser etched with high contrast background
- Color RAL 9006

Features that make a difference:

- Terminal box supplied loose and extended leads
- Greased for life bearings (365Y and below)
- Terminal block – 6 Pins
- Winding Thermistors 155C
- Internal AEGIS shaft grounding ring

Inverter Rated:
1000 : 1 for variable torque

TEAO-NEMAPremium

HP	kW	RPM	Frame	Catalog Number	List Price	Mult. Symbol	Approx. Shipping Weight(lbs)	Service Factor	FLAmps@ High	FL.Eff(%)	"C" Dimension(in)	Voltage(V)	Notes
0.75	0.55	3600	145Y	.7536ET3EPM145Y-W22	$926.51	Y1	36	1.00	1.17	79.6	11.457	230/460	34;38
0.75	0.55	1800	145Y	.7518ET3EPM145Y-W22	$938.58	Y1	41	1.00	1.21	84.0	11.457	230/460	34;38
1	0.75	3600	145Y	00136ET3EPM145Y-W22	$931.95	Y1	41	1.00	1.49	77.0	11.457	230/460	34;38
1	0.75	1800	145Y	00118ET3EPM145Y-W22	$ 944.39	Y1	46	1.00	1.47	85.5	11.457	230/460	34;38
1.5	1.1	3600	145Y	00156ET3EPM145Y-W22	$ 924.52	Y1	46	1.00	2.05	84.0	11.457	230/460	34;38
1.5	1.1	1800	145Y	00158ET3EPM145Y-W22	$981.81	Y1	49	1.00	2.02	86.5	11.457	230/460	34;38
2	1.5	3600	145Y	00236ET3EPM145Y-W22	$1,025.03	Y1	52	1.00	2.69	85.5	11.457	230/460	34;38
2	1.5	1800	145Y	00218ET3EPM145Y-W22	$1,084.35	Y1	51	1.00	2.79	86.5	11.457	230/460	34;38
3	2.2	3600	184Y	00336ET3EPM184Y-W22	$1,227.31	Y1	88	1.00	3.76	86.5	13.622	230/460	34;38
3	2.2	1800	184Y	00318ET3EPM184Y-W22	$1,145.80	Y1	90	1.00	3.91	89.5	13.622	230/460	34;38
5	3.7	3600	184Y	00536ET3EPM184Y-W22	$1,327.61	Y1	101	1.00	5.9	88.5	13.622	230/460	34;38
5	3.7	1800	184Y	00518ET3EPM184Y-W22	$1,269.41	Y1	110	1.00	6.49	89.5	13.622	230/460	34;38
7.5	5.5	3600	215Y	00736ET3EPM215Y-W22	$1,729.89	Y1	139	1.00	8.76	89.5	17.155	230/460	34;38
7.5	5.5	1800	215Y	00718ET3EPM215Y-W22	$1,654.71	Y1	154	1.00	9.18	91.7	17.155	230/460	34;38
10	7.5	3600	215Y	01036ET3EPM215Y-W22	$1,914.26	Y1	163	1.00	11.6	90.2	17.155	230/460	34;38
10	7.5	1800	215Y	01018ET3EPM215Y-W22	$1,826.44	Y1	172	1.00	12.7	91.7	17.155	230/460	34;38
15	11	3600	256Y	01536ET3EPM256Y-W22	$2,558.66	Y1	291	1.00	17.2	91.0	22.267	230/460	34;38
15	11	1800	256Y	01518ET3EPM256Y-W22	$2,464.84	Y1	251	1.00	18	92.4	22.267	230/460	34;38
20	15	3600	256Y	02036ET3EPM256Y-W22	$3,077.28	Y1	249	1.00	23.3	91.0	22.267	230/460	34;38
20	15	1800	256Y	02018ET3EPM256Y-W22	$2,982.55	Y1	328	1.00	24.1	93.0	22.267	230/460	34;38
25	18.5	3600	286Y	02536ET3EPM286Y-W22	$4,275.80	Y1	362	1.00	28.8	91.7	24.797	230/460	34;38
25	18.5	1800	286Y	02518ET3EPM286Y-W22	$3,850.15	Y1	353	1.00	29.5	93.6	24.797	230/460	34;38
30	22	3600	286Y	03036ET3EPM286Y-W22	$4,945.49	Y1	351	1.00	34.2	91.7	24.797	230/460	34;38
30	22	1800	286Y	03018ET3EPM286Y-W22	$4,425.34	Y1	437	1.00	35.1	93.6	24.797	230/460	34;38
40	30	3600	326Y	04036ET3EPM326Y-W22	$6,550.19	Y1	547	1.00	46.3	92.4	27.52	230/460	34;38
40	30	1800	326Y	04018ET3EPM326Y-W22	$5,787.96	Y1	492	1.00	47.1	94.1	27.52	230/460	34;38
50	37	1800	326Y	05018ET3EPM326Y-W22	$6,855.89	Y1	536	1.00	59.2	94.5	27.52	230/460	34;38
60	45	1800	365Y	06018ET3EPM365Y-W22	$8,918.39	Y1	869	1.00	71.6	95.0	30.283	230/460	34;38
75	55	1800	365Y	07518ET3EPM365Y-W22	$10,300.08	Y1	919	1.00	87.2	95.4	30.283	230/460	34;38
100	75	1800	405Y	10018ET3EPM405Y-W22	$13,889.39	Y1	1140	1.00	113	95.4	34.173	230/460	34;38

Please refer to inside back cover for description of "NOTES"

For detailed specifications, data sheets, drawings and performance curves visit http://www.weg.net

Pump Motors

JET PUMP SINGLE-PHASE (56C/56J FRAMES)

TEFC – Foot Mount A-214
TEFC – Footless A-214
ODP – Foot Mount. A-215
ODP – Footless A-215

JET PUMP THREE-PHASE (56C/56J FRAMES)

TEFC – Foot Mount A-216
TEFC – Footless A-216
TEFC – Footless - Explosion Proof A-216
ODP – Foot Mount. A-217
ODP – Footless A-217

CLOSE-COUPLED PUMP TEFC MOTORS

JM – TEFC – Single-Phase A-219
JP – TEFC – Single-Phase. A-220
JM – TEFC – Three-Phase. A-221
JP – TEFC – Three-Phase A-225
JP – TEFC – Explosion Proof A-228

CLOSE-COUPLED PUMP ODP MOTORS

JM – ODP – Single-Phase. A-229
JP – ODP – Single-Phase A-229
JM – ODP – Three-Phase A-230
JM – ODP – Three-Phase – Footless Vertical A-233
JP – ODP – Three-Phase. A-234
JP – ODP – Three-Phase – Footless Vertical A-237

CLOSE-COUPLED PUMP TEFC MOTORS - WITH INTERNAL AEGIS® SGR

JM – TEFC – Three-Phase. A-239
JP – TEFC – Three-Phase A-240

CLOSE-COUPLED PUMP ODP MOTORS - WITH INTERNAL AEGIS® SGR

JM – ODP – Three-Phase A-241
JP – ODP – Three-Phase. A-242

FIRE PUMP MOTORS

ODP – Three-Phase A-245
ODP – Three-Phase – C-Face A-247
ODP – Three-Phase – JM – Footless Vertical. A-248
ODP – Three-Phase – JP – Footless Vertical A-249
W40 – ODP (50Hz) – Three-Phase – IE2 . . . . . A-251
TEFC (50Hz) – Three-Phase – IE2 . . . . . A-252

P-BASE MOTORS

TEFC – Three-Phase – NEMA Premium® A-253

Pump Motors

JET PUMP (56C/56J FRAMES)

These versatile motors have the torque and durability for the toughest commercial applications, yet are also economical choices for residential applications. Available with or without base and in “J” and “C” configurations.

ODP Single Phase

ODP & TEFC - Single Phase

- Insulation class B
- Sealed ball bearings (Drive end)
- NEMA Service factor

ODP Three Phase

ODP & TEFC - Three Phase

- Insulation class B (ODP)
- Insulation class F (TEFC)
- NEMA Service factor

TEFC Single Phase

Features that make a difference:

ODP & TEFC - Single Phase

- Automatic Reset Thermal Overload Protector
- Stainless steel shaft end

ODP & TEFC - Three Phase

- Stainless steel shaft end

TEFC Three Phase

Pump Motors

JET PUMP SINGLE-PHASE (56C/56J FRAMES)

TEFC - Foot Mount

HP	kW	RPM	Frame	Catalog Number	List Price	Mult. Symbol	Approx. Shipping Weight (lbs)	Service Factor	FL Amps @ High	FL. Eff (%)	"C" Dimension (in)	Voltage (V)	Notes
0.33	0.25	3600	W56C	**.3336ES1BJPW56C-S**	**$263**	P1A	24	1.15	2.60	54.0	11.106	115/208-230	3;9
		3600	W56J	**.3336ES1BJPW56J-S**	**$282**	P1B	22	1.15	2.60	54.0	11.606	115/208-230	3;9
0.5	0.37	3600	W56C	**.5036ES1BJPW56C-S**	**$284**	P1A	26	1.15	3.50	60.0	11.500	115/208-230	3;9
		3600	W56J	**.5036ES1BJPW56J-S**	**$300**	P1B	24	1.15	3.50	58.0	12.000	115/208-230	3;9
0.75	0.55	3600	56C	**.7536ES1BJP56C-S**	**$320**	P1A	29	1.15	4.00	66.0	12.720	115/208-230	3;9
		3600	56J	**.7536ES1BJP56J-S**	**$330**	P1B	29	1.15	4.00	64.0	13.220	115/208-230	3;9
1	0.75	3600	56C	**00136ES1BJP56C-S**	**$344**	P1A	32	1.15	5.10	70.0	13.114	115/208-230	3;9
		3600	56J	**00136ES1BJP56J-S**	**$374**	P1B	33	1.15	5.10	67.0	13.614	115/208-230	3;9
1.5	1.1	3600	56C	**00156ES1BJP56C-S**	**$412**	P1A	37	1.15	6.60	75.0	13.902	115/208-230	3;9
		3600	56J	**00156ES1BJP56J-S**	**$425**	P1B	37	1.15	6.60	70.0	14.402	115/208-230	3;9
2	1.5	3600	56HC	**00236ES1BJP56C-S**	**$487**	P1A	42	1.15	8.70	74.0	14.295	115/208-230	3;9
		3600	56HJ	**00236ES1BJP56J-S**	**$486**	P1B	42	1.15	8.70	74.0	14.795	115/208-230	3;9
3	2.2	3600	56HC	**00336ES1DJP56C-S**	**$548**	P1A	51	1.15	12.7	80.0	15.476	230	3;9
		3600	56HJ	**00336ES1DJP56J-S**	**$557**	P1B	53	1.15	12.7	80.0	15.976	230	3;9

TEFC - Footless

HP	kW	RPM	Frame	Catalog Number	List Price	Mult. Symbol	Approx. Shipping Weight (lbs)	Service Factor	FL Amps @ High	FL. Eff (%)	"C" Dimension (in)	Voltage (V)	Notes
0.33	0.25	3600	W56C	**.3336ES1BJPRW56C-S**	**$282**	P1A	24	1.15	2.60	54.0	11.106	115/208-230	3;9;20;51
		3600	W56J	**.3336ES1BJPRW56J-S**	**$296**	P1B	21	1.15	2.60	54.0	11.606	115/208-230	3;9;20
0.5	0.37	3600	W56C	**.5036ES1BJPRW56C-S**	**$299**	P1A	26	1.15	3.50	60.0	11.500	115/208-230	3;9;20
		3600	W56J	**.5036ES1BJPRW56J-S**	**$305**	P1B	24	1.15	3.50	60.0	12.000	115/208-230	3;9;20
0.75	0.55	3600	56C	**.7536ES1BJPR56C-S**	**$341**	P1A	29	1.15	4.00	66.0	12.720	115/208-230	3;9;20
		3600	56J	**.7536ES1BJPR56J-S**	**$336**	P1B	29	1.15	4.00	64.0	13.220	115/208-230	3;9;20
1	0.75	3600	56C	**00136ES1BJPR56C-S**	**$357**	P1A	32	1.15	5.10	70.0	13.114	115/208-230	3;9;20
		3600	56J	**00136ES1BJPR56J-S**	**$386**	P1B	32	1.15	5.10	67.0	13.614	115/208-230	3;9;20
1.5	1.1	3600	56C	**00156ES1BJPR56C-S**	**$432**	P1A	37	1.15	6.60	75.0	13.902	115/208-230	3;9;20
		3600	56J	**00156ES1BJPR56J-S**	**$438**	P1B	37	1.15	6.60	75.0	14.402	115/208-230	3;9;20
2	1.5	3600	56C	**00236ES1BJPR56C-S**	**$494**	P1A	42	1.15	8.70	77.0	14.295	115/208-230	3;9;20
		3600	56J	**00236ES1BJPR56J-S**	**$498**	P1B	41	1.15	8.70	77.0	14.795	115/208-230	3;9;20
3	2.2	3600	56C	**00336ES1DJPR56C-S**	**$555**	P1A	51	1.15	12.7	80.0	15.476	230	3;9;20
		3600	56J	**00336ES1DJPR56J-S**	**$573**	P1B	53	1.15	12.7	80.0	15.976	230	3;9;20

Please refer to inside back cover for description of "NOTES"

For detailed specifications, data sheets, drawings and performance curves visit http://www.weg.net

Data subject to change without notice.

ODP - Foot Mount

HP	kW	RPM	Frame	Catalog Number	List Price	Mult. Symbol	Approx. Shipping Weight (lbs)	Service Factor	FL Amps @ High	FL. Eff (%)	"C" Dimension (in)	Voltage (V)	Notes
0.33	0.25	3600	W56J	**.33360S1BJPW56J-S**	**$254**	P1B	19	1.75	2.50	59.0	10.366	115/208-230	3;9
0.5	0.37	3600	W56J	**.50360S1BJPW56J-S**	**$258**	P1B	22	1.60	3.30	65.0	10.760	115/208-230	3;9
0.75	0.55	3600	W56J	**.75360S1BJPW56J-S**	**$296**	P1B	25	1.50	4.80	68.3	11.154	115/208-230	3;9
1	0.75	3600	56J	**001360S1BJP56J-S**	**$334**	P1B	29	1.40	6.40	68.0	12.008	115/208-230	3;9
1.5	1.1	3600	56J	**001560S1BJP56J-S**	**$382**	P1B	33	1.30	8.60	72.0	12.402	115/208-230	3;9
2	1.5	3600	56J	**002360S1BJP56J-S**	**$438**	P1B	41	1.20	10.9	75.0	13.189	115/208-230	3;9
3	2.2	3600	56J	**003360S1DJP56J-S**	**$499**	P1B	46	1.15	13.2	78.0	13.976	230	3;9

ODP - Footless

HP	kW	RPM	Frame	Catalog Number	List Price	Mult. Symbol	Approx. Shipping Weight (lbs)	Service Factor	FL Amps @ High	FL. Eff (%)	"C" Dimension (in)	Voltage (V)	Notes
0.33	0.25	3600	W56C	**.33360S1BJPRW56C-S**	**$237**	P1A	19	1.75	2.50	59.0	9.866	115/208-230	3;9;20
		3600	W56J	**.33360S1BJPRW56J-S**	**$255**	P1B	19	1.75	2.50	59.0	10.366	115/208-230	3;9;20
0.5	0.37	3600	W56C	**.50360S1BJPRW56C-S**	**$255**	P1A	21	1.60	3.30	65.0	10.260	115/208-230	3;9;20
		3600	W56J	**.50360S1BJPRW56J-S**	**$258**	P1B	21	1.60	3.30	65.0	10.760	115/208-230	3;9;20
0.75	0.55	3600	W56C	**.75360S1BJPRW56C-S**	**$297**	P1A	24	1.50	4.80	67.0	10.654	115/208-230	3;9;20
		3600	W56J	**.75360S1BJPRW56J-S**	**$296**	P1B	24	1.50	4.80	68.3	11.154	115/208-230	3;9;20
1	0.75	3600	56C	**001360S1BJPR56C-S**	**$317**	P1A	32	1.40	6.40	68.0	11.496	115/208-230	3;9;20
		3600	56J	**001360S1BJPR56J-S**	**$334**	P1B	29	1.40	6.40	66.3	12.008	115/208-230	3;9;20
1.5	1.1	3600	56C	**001560S1BJPR56C-S**	**$338**	P1A	36	1.30	8.60	72.0	11.890	115/208-230	3;9;20
		3600	56J	**001560S1BJPR56J-S**	**$382**	P1B	33	1.30	8.60	73.2	12.402	115/208-230	3;9;20
2	1.5	3600	56C	**002360S1BJPR56C-S**	**$424**	P1A	40	1.20	10.9	75.0	12.677	115/208-230	3;9;20
		3600	56J	**002360S1BJPR56J-S**	**$438**	P1B	40	1.20	10.9	75.0	13.189	115/208-230	3;9;20
3	2.2	3600	56C	**003360S1DJPR56C-S**	**$482**	P1A	45	1.15	13.2	77.1	13.465	230	3;9;20
		3600	56J	**003360S1DJPR56J-S**	**$499**	P1B	45	1.15	13.2	77.1	13.976	230	3;9;20

Please refer to inside back cover for description of "NOTES"

For detailed specifications, data sheets, drawings and performance curves visit http://www.weg.net

Pump Motors

JET PUMP THREE-PHASE (56C/56J FRAMES)

TEFC - Foot Mount

HP	kW	RPM	Frame	Catalog Number	List Price	Mult. Symbol	Approx. Shipping Weight (lbs)	Service Factor	FL Amps @ High	FL. Eff (%)	"C" Dimension (in)	Voltage (V)	Notes
0.33	0.25	3600	56J	.3336ES3EJP56J-S	$259	P1B	24	1.15	0.60	62.0	11.654	208-230/460	9
0.5	0.37	3600	56J	.5036ES3EJP56J-S	$267	P1B	26	1.15	0.80	68.0	12.047	208-230/460	9
0.75	0.55	3600	56J	.7536ES3EJP56J-S	$301	P1B	27	1.15	1.10	72.0	12.047	208-230/460	9
		3600	56J	.7536ES3HJP56J-S	$301	P1B	27	1.15	0.90	72.0	12.047	575	9
1	0.75	3600	W56J	00136ET3EJPW56J-S	$434	P1B	25	1.15	1.50	78.5	11.606	230/460	9
		3600	W56J	00136ET3HJPW56J-S	$434	P1B	25	1.15	1.20	78.5	11.606	575	9
1.5	1.1	3600	56J	00156ET3EJP56J-S	$473	P1B	41	1.15	1.90	84.0	13.614	230/460	9
		3600	56J	00156ET3HJP56J-S	$473	P1B	41	1.15	1.50	84.0	13.614	575	9
2	1.5	3600	56J	00236ET3EJP56J-S	$535	P1B	46	1.15	2.50	85.5	14.402	230/460	9
		3600	56J	00236ET3HJP56J-S	$535	P1B	46	1.15	2.00	85.5	14.402	575	9
3	2.2	3600	56J	00336ET3EJP56J-S	$634	P1B	55	1.15	3.50	86.5	15.583	230/460	9
		3600	56J	00336ET3HJP56J-S	$634	P1B	55	1.15	2.80	86.5	15.583	575	9

TEFC - Footless

HP	kW	RPM	Frame	Catalog Number	List Price	Mult. Symbol	Approx. Shipping Weight (lbs)	Service Factor	FL Amps @ High	FL. Eff (%)	"C" Dimension (in)	Voltage (V)	Notes
0.33	0.25	3600	56C	.3336ES3EJPR56C-S	$257	P1A	24	1.15	0.60	62.0	11.142	208-230/460	9;20
		3600	56J	.3336ES3EJPR56J-S	$268	P1B	24	1.15	0.60	62.0	11.654	208-230/460	9;20
0.5	0.37	3600	56C	.5036ES3EJPR56C-S	$270	P1A	26	1.15	0.80	68.0	11.535	208-230/460	9;20
		3600	56J	.5036ES3EJPR56J-S	$282	P1B	26	1.15	0.80	68.0	12.047	208-230/460	9;20
0.75	0.55	3600	56C	.7536ES3EJPR56C-S	$293	P1A	27	1.15	1.10	72.0	11.535	208-230/460	9;20;51
		3600	56J	.7536ES3EJPR56J-S	$319	P1B	27	1.15	1.10	72.0	12.047	208-230/460	9;20
1	0.75	3600	W56C	00136ET3EJPRW56C-S	$425	P1A	25	1.15	1.50	78.5	11.106	230/460	9;20
		3600	W56J	00136ET3EJPRW56J-S	$434	P1B	25	1.15	1.50	78.5	11.606	230/460	9;20
1.5	1.1	3600	56C	00156ET3EJPR56C-S	$455	P1A	39	1.15	1.90	84.0	13.114	230/460	9;20
		3600	56J	00156ET3EJPR56J-S	$468	P1B	41	1.15	1.90	84.0	13.614	230/460	9;20
		3600	56J	00156ET3HJPR56J-S	$468	P1B	41	1.15	1.50	84.0	13.614	575	9;20
2	1.5	3600	56C	00236ET3EJPR56C-S	$490	P1A	46	1.15	2.50	85.5	13.901	230/460	9;20
		3600	56J	00236ET3EJPR56J-S	$525	P1B	46	1.15	2.50	85.5	14.402	230/460	9;20
		3600	56J	00236ET3HJPR56J-S	$525	P1B	46	1.15	2.00	85.5	14.402	575	9;20
3	2.2	3600	56C	00336ET3EJPR56C-S	$602	P1A	55	1.15	3.50	86.5	15.083	230/460	9;20
		3600	56J	00336ET3EJPR56J-S	$624	P1B	55	1.15	3.50	86.5	15.583	230/460	9;20

TEFC - Footless Mount - Explosion Proof

HP	kW	RPM	Frame	Catalog Number	List Price	Mult. Symbol	Approx. Shipping Weight (lbs)	Service Factor	FL Amps @ High	FL. Eff (%)	"C" Dimension (in)	Voltage (V)	Notes
0.5	0.37	3600	56J	.5036XS3EJPR56J	$810	XF	24	1.00	0.9	73.1	12.3	230/460	1;3;9;43;51
0.75	0.55	3600	56J	.7536XS3EJPR56J	$835	XF	25	1.00	1.2	77.1	12.3	230/460	1;3;9;45
1	0.75	3600	56J	00136XT3EJPR56J	$1,030	XF	27	1.00	1.6	77	12.43	230/460	1;3;9;47
1.5	1.1	3600	56J	00156XT3EJPR56J	$1,105	XF	30	1.00	2.1	84	13.3	230/460	1;3;9;49
2	1.5	3600	56J	00236XT3EJPR56J	$1,153	XF	35	1.00	2.7	85.5	13.3	230/460	1;3;9;51

Please refer to inside back cover for description of "NOTES"

For detailed specifications, data sheets, drawings and performance curves visit http://www.weg.net

Data subject to change without notice.

JET PUMP THREE-PHASE (56C/56J FRAMES)

ODP - Foot Mount

HP	kW	RPM	Frame	Catalog Number	List Price	Mult. Symbol	Approx. Shipping Weight (lbs)	Service Factor	FL Amps @ High	FL. Eff (%)	"C" Dimension (in)	Voltage (V)	Notes
0.33	0.25	3600	56J	**.33360S3EJP56J-S**	**$224**	P1B	21	1.75	0.60	68.0	10.827	208-230/460	9
0.5	0.37	3600	56J	**.50360S3EJP56J-S**	**$236**	P1B	21	1.60	0.90	68.0	10.827	208-230/460	9
		3600	56J	**.50360S3HJP56J-S**	**$236**	P1B	21	1.60	0.70	70.0	10.827	575	9
0.75	0.55	3600	56J	**.75360S3EJP56J-S**	**$271**	P1B	24	1.50	1.20	72.0	11.220	208-230/460	9
		3600	56J	**.75360S3HJP56J-S**	**$271**	P1B	24	1.50	1.00	72.0	11.220	575	9
1	0.75	3600	56J	**001360S3EJP56J-S**	**$286**	P1B	25	1.40	1.50	74.0	11.220	208-230/460	9
		3600	56J	**001360S3HJP56J-S**	**$286**	P1B	25	1.40	1.20	75.5	11.220	575	9
1.5	1.1	3600	56J	**001560S3EJP56J-S**	**$296**	P1B	28	1.30	2.10	77.0	11.614	208-230/460	9
		3600	56J	**001560S3HJP56J-S**	**$296**	P1B	28	1.30	1.70	77.0	11.614	575	9
2	1.5	3600	56HJ	**002360S3EJP56J-S**	**$316**	P1B	32	1.20	2.80	78.5	12.008	208-230/460	9
		3600	56HJ	**002360S3HJP56J-S**	**$316**	P1B	32	1.20	2.30	78.5	12.008	575	9
3	2.2	3600	56HJ	**003360S3EJP56J-S**	**$339**	P1B	38	1.15	3.90	81.5	12.795	208-230/460	9
		3600	56HJ	**003360S3HJP56J-S**	**$339**	P1B	38	1.15	3.10	81.5	12.795	575	9

ODP - Footless

HP	kW	RPM	Frame	Catalog Number	List Price	Mult. Symbol	Approx. Shipping Weight (lbs)	Service Factor	FL Amps @ High	FL. Eff (%)	"C" Dimension (in)	Voltage (V)	Notes
0.33	0.25	3600	56C	**.33360S3EJPR56C-S**	**$220**	P1A	22	1.75	0.60	68.0	10.315	208-230/460	9;20
		3600	56J	**.33360S3EJPR56J-S**	**$229**	P1B	21	1.75	0.60	66.0	10.827	208-230/460	9;20
0.5	0.37	3600	56C	**.50360S3EJPR56C-S**	**$224**	P1A	29	1.60	0.90	70.0	10.315	208-230/460	9;20
		3600	56J	**.50360S3EJPR56J-S**	**$241**	P1B	21	1.60	0.90	68.0	10.827	208-230/460	9;20
0.75	0.55	3600	56C	**.75360S3EJPR56C-S**	**$257**	P1A	24	1.50	1.20	70.0	10.709	208-230/460	9;20
		3600	56J	**.75360S3EJPR56J-S**	**$278**	P1B	24	1.50	1.20	72.0	11.22	208-230/460	9;20
		3600	56C	**.75360S3HJPR56C-S**	**$257**	P1A	24	1.50	1.00	70.0	10.709	575	9;20
		3600	56J	**.75360S3HJPR56J-S**	**$277**	P1B	24	1.50	1.00	70.0	11.220	575	9;20
1	0.75	3600	56C	**001360S3EJPR56C-S**	**$274**	P1A	25	1.40	1.50	75.5	10.709	208-230/460	9;20
		3600	56J	**001360S3EJPR56J-S**	**$287**	P1B	25	1.40	1.50	74.0	11.220	208-230/460	9;20
1.5	1.1	3600	56C	**001560S3EJPR56C-S**	**$290**	P1A	28	1.30	2.10	77.0	11.102	208-230/460	9;20
		3600	56J	**001560S3EJPR56J-S**	**$305**	P1B	28	1.30	2.10	77.0	11.614	208-230/460	9;20
		3600	56C	**001560S3HJPR56C-S**	**$290**	P1A	28	1.30	1.70	77.0	11.102	575	9;20
2	1.5	3600	56C	**002360S3EJPR56C-S**	**$311**	P1A	30	1.20	2.80	78.5	11.496	208-230/460	9;20
		3600	56J	**002360S3EJPR56J-S**	**$321**	P1B	32	1.20	2.80	78.5	12.008	208-230/460	9;20
		3600	56C	**002360S3HJPR56C-S**	**$311**	P1A	30	1.20	2.30	78.5	11.496	575	9;20
		3600	56J	**002360S3HJPR56J-S**	**$321**	P1B	32	1.20	2.30	78.5	12.008	575	9;20
3	2.2	3600	56C	**003360S3EJPR56C-S**	**$332**	P1A	35	1.15	3.90	81.5	12.283	208-230/460	9;20
		3600	56J	**003360S3EJPR56J-S**	**$350**	P1B	38	1.15	3.90	81.5	12.795	208-230/460	9;20

Please refer to inside back cover for description of "NOTES"

For detailed specifications, data sheets, drawings and performance curves visit http://www.weg.net

Pump Motors

CLOSE-COUPLED PUMP MOTORS

ODP - Three Phase

WEG Open Drip Proof motors are designed to meet demanding applications in environments where dirt and humidity are minimal. These motors are specifically designed to provide maximum ventilation and heat dissipation.

Inverter Rated: 1000 : 1 for variable torque

Features that make a difference:

- For rolled steel motors: 50/60 Hz rated (380V on Nameplate - 400/415 Available - Same Horse Power at 50 Hz with a 1.0 Service Factor)
- For W40 - cast iron motors: Nameplated 50 Hz at reduced HP IE3 efficiency and CE mark (10-60HP)
- Class F insulation (Impregnation Resin and Magnet wire are class H)
- F1 Mounted (Cast Iron Frame motors are F2 convertible)
- Stainless Steel Nameplate - Laser etched with high contrast background (Cast Iron Frame only)
- Regreasable ball bearings (Frames 254JM/JP and up)
- AEGIS Ring™ inside available

TEFC - Three Phase

High performance with maximum energy efficiency, this is the meaning of the new WEG electric motor. High efficiency and Low cost of Ownership throughout the entire motor lifetime have been the basis for the W22 development. A design created to anticipate concepts on performance and energy savings.

WEG's W22 cast iron platform has an improved cooling system and solid feet for cooler operation and reduced vibration and noise extending the life of the motor.

Inverter Rated: 1000 : 1 for variable torque

Features that make a difference:

- 1.25 Service Factor
- Optimized ventilation system for cooler operation and reduced noise levels
- Solid base for reduced vibration levels
- NPT Threaded terminal box
- AEGIS Ring™ inside available

Standard Features:

- 50/60 Hz rated (380V on Nameplate - 400/415 Available - Same Horse Power at 50 Hz with a 1.0 Service Factor)
- Class F insulation (Impregnation Resin and Magnet wire are class H)
- F1 Mounted (Cast Iron frames are F2 convertible)
- Stainless Steel Nameplate - Laser etched with high contrast background (cast iron fram only)
- Regreasable ball bearings (Frames 254JM/JP and up)
- Gasketed conduit box
- Class I, Div. 2, Groups A, B, C & D – T3, Class II, Div 2, Groups F & G – T3C

JM - TEFC - Single-Phase

HP	kW	RPM	Frame	Catalog Number	List Price	Mult. Symbol	Approx. Shipping Weight (lbs)	Service Factor	FL Amps @ High	FL. Eff (%)	"C" Dimension (in)	Voltage (V)	Notes
1	0.75	3600	143/5JM	**00136ES1E143JM-W22**	**$682**	P1	51	1.15	2.4	70	16.811	208-230/460	
1.5	1.1	3600	143/5JM	**00156ES1E143JM-W22**	**$729**	P1	53	1.15	3.4	74	16.811	208-230/460	
		1800	143/5JM	**00158ES1E145JM-W22**	**$754**	P1	69	1.15	3.38	77	16.811	208-230/460	
2	1.5	1800	143/5JM	**00218ES1E145JM-W22**	**$814**	P1	70	1.15	4.56	78.5	16.811	208-230/460	
3	2.2	3600	143/5JM	**00336ES1C145JM-W22**	**$1,076**	P1	72	1.15	12.6	78.5	16.811	208-230	
		1800	182/4JM	**00318ES1E184JM-W22**	**$1,182**	P1	108	1.15	6.9	77	18.543	208-230/460	
		1800	182/4JM	**00318ES1B184JM-W22**	**$1,182**	P1	108	1.15	15.1	77	18.543	115/208-230	
5	3.7	3600	182/4JM	**00536ES1C184JM-W22**	**$1,457**	P1	110	1.15	19	85.5	18.543	208-230	
		1800	182/4JM	**00518ES1B184JM-W22**	**$1,430**	P1	127	1.15	22.4	78	18.543	115/208-230	
7.5	5.5	3600	213/5JM	**00736ES1C213JM-W22**	**$1,641**	P1	169	1.15	28.3	85.5	20.354	208-230	
		1800	213/5JM	**00718ES1C215JM-W22**	**$1,766**	P1	185	1.15	31.7	83	20.354	208-230	
10	7.5	1800	213/5JM	**01018ES1E215JM-W22**	**$2,057**	P1	194	1.15	20.4	84	20.354	208-230/460	
		1800	213/5JM	**01018ES1C215JM-W22**	**$2,057**	P1	197	1.15	40.9	84	20.354	208-230	

Please refer to inside back cover for description of "NOTES"

For detailed specifications, data sheets, drawings and performance curves visit http://www.weg.net

Pump Motors

CLOSE-COUPLED PUMP TEFC MOTORS

JP - TEFC - Single-Phase

HP	kW	RPM	Frame	Catalog Number	List Price	Mult. Symbol	Approx. Shipping Weight (lbs)	Service Factor	FL Amps @ High	FL. Eff (%)	"C" Dimension (in)	Voltage (V)	Notes
0.5	0.37	3600	143/5JP	**.5036ES1E143JP-W22**	**$668**	P1	51	1.15	1.47	57.7	19.882	208-230/460	
1.5	1.1	3600	143/5JP	**00156ES1E143JP-W22**	**$729**	P1	53	1.15	3.40	74.0	19.882	208-230/460	
2	1.5	3600	143/5JP	**00236ES1E145JP-W22**	**$770**	P1	69	1.15	4.50	77.0	19.882	208-230/460	
		1800	143/5JP	**00218ES1E145JP-W22**	**$814**	P1	69	1.15	4.56	78.5	19.882	208-230/460	
3	2.2	3600	143/5JP	**00336ES1E145JP-W22**	**$1,076**	P1	61	1.15	6.25	78.5	19.882	208-230/460	
		1800	182/4JP	**00318ES1E184JP-W22**	**$1,182**	P1	103	1.15	6.90	77.0	21.614	208-230/460	
		1800	182/4JP	**00318ES1B184JP-W22**	**$1,182**	P1	103	1.15	15.1	77.0	21.614	115/208-230	
5	3.7	3600	182/4JP	**00536ES1E184JP-W22**	**$1,457**	P1	108	1.15	9.50	85.5	21.614	208-230/460	
		3600	182/4JP	**00536ES1B184JP-W22**	**$1,457**	P1	103	1.15	20.8	84.0	21.614	115/208-230	
		1800	182/4JP	**00518ES1E184JP-W22**	**$1,430**	P1	116	1.15	10.7	80.0	21.614	208-230/460	
		1800	182/4JP	**00518ES1B184JP-W22**	**$1,430**	P1	140	1.15	22.4	78.0	21.614	115/208-230	
7.5	5.5	3600	213/5JP	**00736ES1E213JP-W22**	**$1,641**	P1	169	1.15	14.1	85.5	24.212	208-230/460	
		1800	213/5JP	**00718ES1E215JP-W22**	**$1,762**	P1	183	1.15	15.0	83.0	24.212	208-230/460	
10	7.5	3600	213/5JP	**01036ES1E215JP-W22**	**$2,172**	P1	175	1.15	19.4	86.5	24.212	208-230/460	
		3600	213/5JP	**01036ES1C215JP-W22**	**$2,172**	P1	175	1.15	38.9	86.5	24.212	208-230	
		1800	213/5JP	**01018ES1E215JP-W22**	**$2,057**	P1	199	1.15	20.4	84.0	24.212	208-230/460	

Please refer to inside back cover for description of "NOTES"

For detailed specifications, data sheets, drawings and performance curves visit http://www.weg.net

Data subject to change without notice.

JM - TEFC - Three-Phase

HP	kW	RPM	Frame	Catalog Number	List Price	Mult. Symbol	Approx. Shipping Weight (lbs)	Service Factor	FL Amps @ High	FL. Eff (%)	"C" Dimension (in)	Voltage (V)	Notes
1	0.75	1800	143/5JM	00118ET3E143JM-S	$613	P1S	45	1.15	1.50	85.5	16.102	230/460	9
		1800	143/5JM	00118ET3H143JM-S	$613	P1S	45	1.15	1.20	85.5	16.102	575	9
		1800	143/5JM	00118ET3V143JM-S	$613	P1S	45	1.15	1.70	85.5	16.102	200/400	9
		1800	143/5JM	00118ET3E143JM-W22	$613	P1	55	1.25	1.47	85.5	15.675	230/460	
		1800	143/5JM	00118ET3H143JM-W22	$613	P1	55	1.25	1.18	85.5	15.675	575	
		1200	143/5JM	00112ET3E145JM-S	$700	P1S	45	1.15	1.60	82.5	16.102	230/460	9
		1200	143/5JM	00112ET3E145JM-W22	$700	P1	62	1.25	1.73	82.5	15.675	230/460	
1.5	1.1	3600	143/5JM	00156ET3E143JM-S	$710	P1S	41	1.15	1.90	84.0	15.709	230/460	9
		3600	143/5JM	00156ET3E143JM-W22	$710	P1	57	1.25	1.96	84.0	15.675	230/460	
		1800	143/5JM	00158ET3E145JM-S	$643	P1S	47	1.15	2.00	86.5	16.102	230/460	9
		1800	143/5JM	00158ET3H145JM-S	$643	P1S	47	1.15	1.60	86.5	16.102	575	9
		1800	143/5JM	00158ET3V145JM-S	$643	P1S	47	1.15	2.30	86.5	16.102	200/400	9
		1800	143/5JM	00158ET3E145JM-W22	$643	P1	61	1.25	2.02	86.5	15.675	230/460	
		1800	143/5JM	00158ET3H145JM-W22	$643	P1	61	1.25	1.62	86.5	15.675	575	
		1200	182/4JM	00152ET3E182JM-S	$909	P1S	84	1.15	2.20	87.5	17.835	230/460	9
		1200	182/4JM	00152ET3E182JM-W22	$909	P1	99	1.25	2.54	87.5	17.411	230/460	
2	1.5	3600	143/5JM	00236ET3E145JM-S	$683	P1S	47	1.15	2.50	85.5	16.496	230/460	9
		3600	143/5JM	00236ET3H145JM-S	$683	P1S	47	1.15	2.00	85.5	16.496	575	9;51
		3600	143/5JM	00236ET3V145JM-S	$683	P1S	47	1.15	2.80	85.5	16.496	200/400	9
		3600	143/5JM	00236ET3E145JM-W22	$683	P1	61	1.25	2.56	85.5	15.675	230/460	
		3600	143/5JM	00236ET3H145JM-W22	$683	P1	58	1.25	2.05	85.5	15.675	575	
		1800	143/5JM	00218ET3E145JM-S	$707	P1S	50	1.15	2.70	86.5	16.496	230/460	9
		1800	143/5JM	00218ET3H145JM-S	$707	P1S	50	1.15	2.20	86.5	16.496	575	9
		1800	143/5JM	00218ET3V145JM-S	$707	P1S	50	1.15	3.10	86.5	16.496	200/400	9
		1800	143/5JM	00218ET3E145JM-W22	$707	P1	62	1.25	2.76	86.5	15.675	230/460	
		1800	143/5JM	00218ET3H145JM-W22	$707	P1	62	1.25	2.21	86.5	15.675	575	
		1200	182/4JM	00212ET3E184JM-S	$1,021	P1S	97	1.15	3.00	88.5	18.622	230/460	9
		1200	182/4JM	00212ET3E184JM-W22	$1,021	P1	105	1.25	3.23	88.5	17.411	230/460	39
3	2.2	3600	143/5JM	00336ET3E145JM-S	$897	P1S	56	1.15	3.50	86.5	17.677	230/460	9;12
		3600	143/5JM	00336ET3H145JM-S	$897	P1S	56	1.15	2.80	86.5	17.677	575	9;12
		3600	182/4JM	00336ET3E182JM-S	$918	P1S	70	1.15	3.70	86.5	17.048	230/460	9
		3600	182/4JM	00336ET3H182JM-S	$918	P1S	70	1.15	2.90	86.5	17.048	575	9
		3600	143/5JM	00336ET3E145JM-W22	$764	P1	60	1.25	3.71	86.5	15.675	230/460	12
		3600	143/5JM	00336ET3H145JM-W22	$764	P1	60	1.25	2.97	86.5	15.675	575	12
		3600	182/4JM	00336ET3E182JM-W22	$918	P1	101	1.25	3.63	86.5	17.411	230/460	
		3600	182/4JM	00336ET3H182JM-W22	$918	P1	101	1.25	2.90	86.5	17.411	575	
		1800	182/4JM	00318ET3E182JM-S	$1,022	P1S	101	1.15	3.80	89.5	19.409	230/460	9
		1800	182/4JM	00318ET3H182JM-S	$1,022	P1S	101	1.15	3.10	89.5	19.409	575	9
		1800	182/4JM	00318ET3V182JM-S	$1,022	P1S	101	1.15	4.40	89.5	19.409	200/400	9
		1800	182/4JM	00318ET3E182JMV-S	$1,080	P1S	101	1.15	3.80	89.5	20.749	230/460	9;15
		1800	182/4JM	00318ET3E182JM-W22	$1,022	P1	97	1.25	3.91	89.5	17.411	230/460	
		1800	182/4JM	00318ET3H182JM-W22	$1,022	P1	96	1.25	3.13	89.5	17.411	575	
		1200	213/5JM	00312ET3E213JM-S	$1,423	P1S	147	1.15	4.20	89.5	20.433	230/460	9
		1200	213/5JM	00312ET3E213JM-W22	$1,423	P1	160	1.25	4.41	89.5	20.392	230/460	

continued on next page

Please refer to inside back cover for description of "NOTES"

For detailed specifications, data sheets, drawings and performance curves visit http://www.weg.net

CLOSE-COUPLED PUMP TEFC MOTORS

JM - TEFC - Three-Phase - *continued*

HP	kW	RPM	Frame	Catalog Number	List Price	Mult. Symbol	Approx. Shipping Weight (lbs)	Service Factor	FL Amps @ High	FL. Eff (%)	"C" Dimension (in)	Voltage (V)	Notes
5	3.7	3600	182/4JM	00536ET3E184JM-S	$1,075	P1S	79	1.15	5.90	88.5	18.228	230/460	9
		3600	182/4JM	00536ET3H184JM-S	$1,075	P1S	90	1.15	4.70	88.5	18.228	575	9
		3600	182/4JM	00536ET3P184JM-S	$1,075	P1S	90	1.15	13.6	88.5	18.228	200	9
		3600	182/4JM	00536ET3V184JM-S	$1,075	P1S	79	1.15	6.80	88.5	19.409	200/400	9
		3600	182/4JM	00536ET3E184JMV-S	$1,247	P1S	79	1.15	5.90	88.5	19.606	230/460	9;15;51
		3600	182/4JM	00536ET3E184JM-W22	$1,075	P1	108	1.25	5.90	88.5	17.411	230/460	
		3600	182/4JM	00536ET3H184JM-W22	$1,075	P1	107	1.25	4.72	88.5	17.411	575	
		1800	182/4JM	00518ET3E184JM-S	$1,141	P1S	94	1.15	6.50	89.5	19.409	230/460	9
		1800	182/4JM	00518ET3H184JM-S	$1,141	P1S	94	1.15	5.20	89.5	19.409	575	9
		1800	182/4JM	00518ET3P184JM-S	$1,141	P1S	94	1.15	14.9	89.5	19.409	200	9
		1800	182/4JM	00518ET3V184JM-S	$1,141	P1S	94	1.15	7.50	89.5	19.409	200/400	9
		1800	182/4JM	00518ET3E184JMV-S	$1,199	P1S	94	1.15	6.50	89.5	20.749	230/460	9;15
		1800	182/4JM	00518ET3E184JM-W22	$1,141	P1	106	1.25	6.45	89.5	17.411	230/460	
		1800	182/4JM	00518ET3H184JM-W22	$1,141	P1	106	1.25	5.16	89.5	17.411	575	
		1800	182/4JM	00518ET3P184JM-W22	$1,141	P1	106	1.25	14.8	89.5	17.411	200	
		1200	213/5JM	00512ET3E215JM-S	$1,769	P1S	163	1.15	6.70	89.5	21.220	230/460	9
		1200	213/5JM	00512ET3E215JM-W22	$1,769	P1	180	1.25	6.83	89.5	20.392	230/460	
7.5	5.5	3600	182/4JM	00736ET3E184JM-S	$1,313	P1S	102	1.15	8.60	89.5	18.622	230/460	9;12
		3600	213/5JM	00736ET3E213JM-S	$1,419	P1S	134	1.15	8.70	89.5	20.039	230/460	9
		3600	182/4JM	00736ET3H184JM-S	$1,313	P1S	102	1.15	6.90	89.5	18.622	575	9
		3600	213/5JM	00736ET3H213JM-S	$1,419	P1S	133	1.15	6.90	89.5	20.039	575	9
		3600	213/5JM	00736ET3V213JM-S	$1,419	P1S	152	1.15	10.0	89.5	20.039	200/400	9
		3600	182/4JM	00736ET3E184JM-W22	$1,313	P1	108	1.25	8.76	89.5	17.411	230/460	12
		3600	182/4JM	00736ET3H184JM-W22	$1,313	P1	108	1.25	7.01	89.5	17.411	575	12
		3600	213/5JM	00736ET3E213JM-W22	$1,419	P1	168	1.25	8.76	89.5	20.392	230/460	
		3600	213/5JM	00736ET3H213JM-W22	$1,419	P1	163	1.25	7.01	89.5	20.392	575	
		1800	213/5JM	00718ET3E213JM-S	$1,519	P1S	139	1.15	9.10	91.7	20.039	230/460	9
		1800	213/5JM	00718ET3H213JM-S	$1,519	P1S	139	1.15	7.30	91.7	20.039	575	9
		1800	213/5JM	00718ET3P213JM-S	$1,519	P1S	139	1.15	20.8	91.7	20.039	200	9;51
		1800	213/5JM	00718ET3V213JM-S	$1,519	P1S	139	1.15	10.4	91.7	20.039	200/400	9
		1800	213/5JM	00718ET3E213JM-W22	$1,519	P1	180	1.25	9.18	91.7	20.392	230/460	
		1800	213/5JM	00718ET3H213JM-W22	$1,519	P1	179	1.25	7.34	91.7	20.392	575	
		1200	254/6JM	00712ET3E254JM-S	$2,455	P1S	247	1.15	10.0	91.0	24.055	230/460	9
		1200	254/6JM	00712ET3E254JM-W22	$2,455	P1	319	1.25	9.48	91.0	26.226	230/460	
10	7.5	3600	213/5JM	01036ET3E215JM-S	$1,769	P1S	164	1.15	11.5	90.2	21.220	230/460	9
		3600	213/5JM	01036ET3H215JM-S	$1,769	P1S	183	1.15	9.20	90.2	21.220	575	9
		3600	213/5JM	01036ET3V215JM-S	$1,769	P1S	179	1.15	13.2	90.2	22.795	200/400	9
		3600	213/5JM	01036ET3E215JM-W22	$1,769	P1	185	1.25	11.6	90.2	20.392	230/460	
		3600	213/5JM	01036ET3H215JM-W22	$1,769	P1	185	1.25	9.28	90.2	20.392	575	
		1800	213/5JM	01018ET3E215JM-S	$1,792	P1S	151	1.15	12.2	91.7	20.433	230/460	9
		1800	213/5JM	01018ET3H215JM-S	$1,792	P1S	151	1.15	9.80	91.7	20.433	575	9
		1800	213/5JM	01018ET3V215JM-S	$1,792	P1S	151	1.15	14.0	91.7	20.433	200/400	9
		1800	213/5JM	01018ET3E215JM-W22	$1,792	P1	193	1.25	12.4	91.7	20.392	230/460	
		1800	213/5JM	01018ET3H215JM-W22	$1,792	P1	193	1.25	9.92	91.7	20.392	575	
		1200	254/6JM	01012ET3E256JM-S	$2,979	P1S	278	1.15	13.8	91.0	24.843	230/460	9
		1200	254/6JM	01012ET3E256JM-W22	$2,979	P1	327	1.25	12.9	91.0	26.226	230/460	

continued on next page

Please refer to inside back cover for description of "NOTES"

For detailed specifications, data sheets, drawings and performance curves visit http://www.weg.net

Data subject to change without notice.

JM - TEFC - Three-Phase - *continued*

HP	kW	RPM	Frame	Catalog Number	List Price	Mult. Symbol	Approx. Shipping Weight (lbs)	Service Factor	FL Amps @ High	FL. Eff (%)	"C" Dimension (in)	Voltage (V)	Notes
15	11	3600	213/5JM	01536ET3E215JM-S	$2,058	P1S	178	1.15	17.0	91.0	22.795	230/460	9;12
		3600	213/5JM	01536ET3H215JM-S	$2,058	P1S	178	1.15	13.6	91.0	22.795	575	9;12
		3600	213/5JM	01536ET3V215JM-S	$2,058	P1S	178	1.15	19.5	91.0	22.795	200/400	9;12
		3600	213/5JM	01536ET3E215JM-W22	$2,058	P1	187	1.25	17.0	91.0	20.392	230/460	12
		3600	213/5JM	01536ET3H215JM-W22	$2,058	P1	185	1.25	13.8	91.0	20.392	575	12
		3600	254/6JM	01536ET3E254JM-S	$2,214	P1S	216	1.15	17.4	91.0	24.055	230/460	9;12
		3600	254/6JM	01536ET3H254JM-S	$2,214	P1S	216	1.15	13.9	91.0	24.055	575	9
		3600	254/6JM	01536ET3V254JM-S	$2,214	P1S	216	1.15	20.0	91.0	24.055	200/400	9
		3600	254/6JM	01536ET3E254JM-W22	$2,214	P1	301	1.25	17.2	91.0	26.226	230/460	
		3600	254/6JM	01536ET3H254JM-W22	$2,214	P1	300	1.25	13.8	91.0	26.226	575	
		1800	254/6JM	01518ET3E254JM-S	$2,609	P1S	249	1.15	18.2	92.4	24.055	230/460	9
		1800	254/6JM	01518ET3H254JM-S	$2,609	P1S	249	1.15	14.6	92.4	24.055	575	9
		1800	254/6JM	01518ET3V254JM-S	$2,609	P1S	249	1.15	20.9	92.4	24.055	200/400	9
		1800	254/6JM	01518ET3E254JM-W22	$2,609	P1	350	1.25	18.0	92.4	26.226	230/460	
		1800	254/6JM	01518ET3H254JM-W22	$2,609	P1	349	1.25	14.4	92.4	26.226	575	
		1200	284/6JM	01512ET3E284JM-W22	$3,912	P1	434	1.25	17.9	91.7	28.700	230/460	
20	15	3600	254/6JM	02036ET3E256JM-S	$2,965	P1S	257	1.15	22.7	91.0	24.843	230/460	9
		3600	254/6JM	02036ET3H256JM-S	$2,965	P1S	257	1.15	18.2	91.0	24.843	575	9
		3600	254/6JM	02036ET3V256JM-S	$2,965	P1S	257	1.15	26.1	91.0	24.843	200/400	9;51
		3600	254/6JM	02036ET3E256JM-W22	$2,965	P1	327	1.25	23.2	91.0	26.226	230/460	
		3600	254/6JM	02036ET3H256JM-W22	$2,965	P1	325	1.25	18.6	91.0	26.226	575	
		1800	254/6JM	02018ET3E256JM-S	$2,857	P1S	279	1.15	24.7	93.0	24.843	230/460	9
		1800	254/6JM	02018ET3H256JM-S	$2,857	P1S	279	1.15	19.8	92.4	24.843	575	9
		1800	254/6JM	02018ET3V256JM-S	$2,857	P1S	279	1.15	28.4	93.0	24.843	200/400	9
		1800	254/6JM	02018ET3E256JM-W22	$2,857	P1	399	1.25	24.1	93.0	26.226	230/460	
		1800	254/6JM	02018ET3H256JM-W22	$2,857	P1	398	1.25	19.3	93.0	26.226	575	
		1200	284/6JM	02012ET3E286JM-W22	$4,940	P1	461	1.25	24.2	91.7	28.700	230/460	
25	18.5	3600	254/6JM	02536ET3E256JM-S	$3,231	P1S	267	1.15	28.5	91.7	24.843	230/460	9
		3600	254/6JM	02536ET3H256JM-S	$3,231	P1S	267	1.15	22.8	91.7	24.843	575	9
		3600	254/6JM	02536ET3V256JM-S	$3,231	P1S	267	1.15	32.8	91.7	24.843	200/400	9
		3600	254/6JM	02536ET3E256JM-W22	$3,231	P1	375	1.00	28.1	91.7	26.226	230/460	
		3600	254/6JM	02536ET3H256JM-W22	$3,231	P1	374	1.00	22.5	91.7	26.226	575	
		3600	284/6JM	02536ET3E284JM-W22	$3,619	P1	421	1.25	28.5	91.7	28.700	230/460	
		3600	284/6JM	02536ET3H284JM-W22	$3,619	P1	416	1.25	22.8	91.7	28.700	575	
		1800	284/6JM	02518ET3E284JM-W22	$3,734	P1	452	1.25	29.5	93.6	28.700	230/460	
		1800	284/6JM	02518ET3H284JM-W22	$3,734	P1	451	1.25	23.6	93.6	28.700	575	
		1200	324/6JM	02512ET3E324JM-W22	$5,546	P1	598	1.25	30.4	93.0	29.645	230/460	
30	22	3600	284/6JM	03036ET3E286JM-W22	$4,539	P1	439	1.25	33.8	91.7	28.700	230/460	
		3600	284/6JM	03036ET3H286JM-W22	$4,539	P1	439	1.25	27.0	91.7	28.700	575	
		1800	284/6JM	03018ET3E286JM-W22	$4,096	P1	490	1.25	35.1	93.6	28.700	230/460	
		1800	284/6JM	03018ET3H286JM-W22	$4,096	P1	490	1.25	28.1	93.6	28.700	575	51
		1200	324/6JM	03012ET3E326JM-W22	$6,686	P1	636	1.25	36.2	93.0	29.645	230/460	

continued on next page

Please refer to inside back cover for description of "NOTES"

For detailed specifications, data sheets, drawings and performance curves visit http://www.weg.net

CLOSE-COUPLED PUMP TEFC MOTORS

JM - TEFC - Three-Phase - *continued*

HP	kW	RPM	Frame	Catalog Number	List Price	Mult. Symbol	Approx. Shipping Weight (lbs)	Service Factor	FL Amps @ High	FL. Eff (%)	"C" Dimension (in)	Voltage (V)	Notes
40	30	3600	284/6JM	04036ET3E286JM-W22	$5,368	P1	469	1.00	45.8	92.4	28.700	230/460	37
		3600	284/6JM	04036ET3H286JM-W22	$5,368	P1	586	1.00	36.6	92.4	28.700	575	37;51
		3600	324/6JM	04036ET3E324JM-W22	$5,534	P1	605	1.25	45.8	92.4	29.645	230/460	
		3600	324/6JM	04036ET3H324JM-W22	$5,534	P1	604	1.25	36.6	92.4	29.645	575	51
		1800	324/6JM	04018ET3E324JM-W22	$5,316	P1	628	1.25	47.1	94.1	29.645	230/460	
		1800	324/6JM	04018ET3H324JM-W22	$5,316	P1	621	1.25	37.7	94.1	29.645	575	51
		1200	364/5JM	04012ET3E364JM-W22	$8,807	P1	1023	1.25	46.5	94.1	33.031	230/460	
50	37	3600	324/6JM	05036ET3E326JM-W22	$6,622	P1	623	1.25	56.1	93.0	29.645	230/460	
		1800	324/6JM	05018ET3E326JM-W22	$6,513	P1	651	1.25	59.2	94.5	29.645	230/460	
		1800	324/6JM	05018ET3H326JM-W22	$6,513	P1	648	1.25	47.4	94.5	29.645	575	
		1200	364/5JM	05012ET3E365JM-W22	$10,551	P1	1040	1.25	57.4	94.1	33.031	230/460	
60	45	3600	324/6JM	06036ET3E326JM-W22	$7,699	P1	630	1.00	70.2	93.6	29.645	230/460	37
		3600	364/5JM	06036ET3E364JM-W22	$8,261	P1	985	1.25	67.0	93.6	33.832	230/460	
		3600	364/5JM	06036ET3H364JM-W22	$8,261	P1	941	1.25	53.6	93.6	33.832	575	
		1800	364/5JM	06018ET3E364JM-W22	$8,912	P1	1048	1.25	68.3	95.0	33.031	230/460	
		1800	364/5JM	06018ET3H364JM-W22	$8,912	P1	1037	1.25	54.6	95.0	33.031	575	
75	55	3600	364/5JM	07536ET3E365JM-W22	$11,124	P1	989	1.25	81.9	93.6	33.832	230/460	
		3600	364/5JM	07536ET3H365JM-W22	$11,124	P1	992	1.25	65.5	93.6	33.832	575	
		1800	364/5JM	07518ET3E365JM-W22	$10,057	P1	1065	1.25	84.1	95.4	33.031	230/460	
		1800	364/5JM	07518ET3H365JM-W22	$10,057	P1	1039	1.25	67.3	95.4	33.031	575	
100	75	3600	404/5TCZ	10036ET3E405JM-W22	$13,093	P1	1220	1.25	110	94.1	37.724	230/460	
		3600	404/5TCZ	10036ET3G405JM-W22	$13,093	P1	1215	1.25	110	94.1	37.724	460	
		1800	404/5TCZ	10018ET3E405JM-W22	$12,300	P1	1321	1.25	111	95.4	37.724	230/460	
		1800	404/5TCZ	10018ET3G405JM-W22	$12,300	P1	1318	1.25	111	95.4	37.724	460	

Please refer to inside back cover for description of "NOTES"

For detailed specifications, data sheets, drawings and performance curves visit http://www.weg.net

Data subject to change without notice.

JP - TEFC - Three-Phase

HP	kW	RPM	Frame	Catalog Number	List Price	Mult. Symbol	Approx. Shipping Weight (lbs)	Service Factor	FL Amps @ High	FL. Eff (%)	"C" Dimension (in)	Voltage (V)	Notes
1	0.75	1800	143/5JP	00118ET3E143JP-S	$624	P1S	50	1.15	1.50	85.5	19.173	230/460	9
		1800	143/5JP	00118ET3E143JP-W22	$624	P1	53	1.25	1.47	85.5	18.736	230/460	
		1200	143/5JP	00112ET3E145JP-S	$714	P1S	47	1.15	1.60	82.5	19.173	230/460	9
		1200	143/5JP	00112ET3E145JP-W22	$714	P1	55	1.25	1.73	82.5	18.736	230/460	
1.5	1.1	3600	143/5JP	00156ET3E143JP-S	$649	P1S	46	1.15	1.90	84.0	18.780	230/460	9
		3600	143/5JP	00156ET3E143JP-W22	$649	P1	51	1.25	1.96	84.0	18.736	230/460	
		1800	143/5JP	00158ET3E145JP-S	$653	P1S	52	1.15	2.00	86.5	19.173	230/460	9
		1800	143/5JP	00158ET3E145JP-W22	$653	P1	58	1.25	2.02	86.5	18.736	230/460	
		1200	182/4JP	00152ET3E182JP-S	$924	P1S	86	1.15	2.20	87.5	20.906	230/460	9
		1200	182/4JP	00152ET3E182JP-W22	$924	P1	74	1.25	2.54	87.5	20.475	230/460	
2	1.5	3600	143/5JP	00236ET3E145JP-S	$694	P1S	52	1.15	2.50	85.5	19.567	230/460	9
		3600	143/5JP	00236ET3E145JP-W22	$694	P1	59	1.25	2.56	85.5	18.736	230/460	
		1800	143/5JP	00218ET3E145JP-S	$718	P1S	55	1.15	2.70	86.5	19.567	230/460	9
		1800	143/5JP	00218ET3E145JP-W22	$718	P1	59	1.25	2.76	86.5	18.736	230/460	
		1200	182/4JP	00212ET3E184JP-S	$1,040	P1S	100	1.15	3.00	88.5	21.693	230/460	9
		1200	182/4JP	00212ET3E184JP-W22	$1,040	P1	91	1.25	3.23	88.5	20.475	230/460	
3	2.2	3600	143/5JP	00336ET3E145JP-S	$915	P1S	61	1.15	3.50	86.5	20.748	230/460	9;12
		3600	143/5JP	00336ET3E145JP-W22	$915	P1	61	1.25	3.71	86.5	18.736	230/460	12
		3600	182/4JP	00336ET3E182JP-S	$933	P1S	70	1.15	3.70	86.5	20.906	230/460	9
		3600	182/4JP	00336ET3E182JP-W22	$933	P1	111	1.25	3.63	86.5	20.475	230/460	
		3600	182/4JP	00336ET3H182JP-W22	$933	P1	103	1.25	2.90	86.5	20.475	575	
		1800	182/4JP	00318ET3E182JP-S	$1,041	P1S	108	1.15	3.80	89.5	22.480	230/460	9
		1800	182/4JP	00318ET3H182JP-S	$1,041	P1S	108	1.15	3.10	89.5	22.480	575	9
		1800	182/4JP	00318ET3E182JP-W22	$1,041	P1	107	1.25	3.91	89.5	20.475	230/460	
		1800	182/4JP	00318ET3H182JP-W22	$1,041	P1	100	1.25	3.13	89.5	20.475	575	51
		1200	213/5JP	00312ET3E213JP-S	$1,449	P1S	152	1.15	4.20	89.5	24.291	230/460	9,51
		1200	213/5JP	00312ET3E213JP-W22	$1,449	P1	126	1.25	4.41	89.5	24.264	230/460	
5	3.7	3600	182/4JP	00536ET3E184JP-S	$1,094	P1S	59	1.15	5.90	88.5	21.229	230/460	9
		3600	182/4JP	00536ET3E184JP-W22	$1,094	P1	118	1.25	5.90	88.5	20.475	230/460	
		3600	182/4JP	00536ET3H184JP-W22	$1,094	P1	113	1.25	4.72	88.5	20.475	575	
		1800	182/4JP	00518ET3E184JP-S	$1,161	P1S	105	1.15	6.50	89.5	22.480	230/460	9
		1800	182/4JP	00518ET3H184JP-S	$1,161	P1S	105	1.15	5.20	89.5	22.480	575	9
		1800	182/4JP	00518ET3E184JP-W22	$1,161	P1	117	1.25	6.45	89.5	20.475	230/460	
		1800	182/4JP	00518ET3H184JP-W22	$1,161	P1	116	1.25	5.16	89.5	20.475	575	51
		1200	213/5JP	00512ET3E215JP-S	$1,801	P1S	171	1.15	6.70	89.5	25.079	230/460	9,51
		1200	213/5JP	00512ET3E215JP-W22	$1,801	P1	193	1.25	6.83	89.5	24.264	230/460	

continued on next page

Please refer to inside back cover for description of "NOTES"

For detailed specifications, data sheets, drawings and performance curves visit http://www.weg.net

CLOSE-COUPLED PUMP TEFC MOTORS

JP - TEFC - Three-Phase - *continued*

HP	kW	RPM	Frame	Catalog Number	List Price	Mult. Symbol	Approx. Shipping Weight (lbs)	Service Factor	FL Amps @ High	FL. Eff (%)	"C" Dimension (in)	Voltage (V)	Notes
7.5	5.5	3600	182/4JP	00736ET3E184JP-S	$1,339	P1S	111	1.15	8.60	89.5	21.693	230/460	9;12
		3600	182/4JP	00736ET3E184JP-W22	$1,339	P1	118	1.25	8.76	89.5	20.475	230/460	12
		3600	213/5JP	00736ET3E213JP-S	$1,445	P1S	161	1.15	8.70	89.5	25.079	230/460	9,51
		3600	213/5JP	00736ET3H213JP-S	$1,445	P1S	161	1.15	6.90	89.5	25.079	575	9
		3600	213/5JP	00736ET3E213JP-W22	$1,445	P1	177	1.25	8.76	89.5	24.264	230/460	
		3600	213/5JP	00736ET3H213JP-W22	$1,445	P1	168	1.25	7.01	89.5	24.264	575	51
		1800	213/5JP	00718ET3E213JP-S	$1,543	P1S	148	1.15	9.10	91.7	23.898	230/460	9
		1800	213/5JP	00718ET3H213JP-S	$1,543	P1S	148	1.15	7.30	91.7	23.898	575	9,51
		1800	213/5JP	00718ET3V213JP-S	$1,543	P1S	148	1.15	10.4	91.7	23.898	200/400	9,51
		1800	213/5JP	00718ET3E213JP-W22	$1,543	P1	189	1.25	9.18	91.7	24.264	230/460	
		1800	213/5JP	00718ET3H213JP-W22	$1,543	P1	188	1.25	7.34	91.7	24.264	575	
		1200	254/6JP	00712ET3E254JP-S	$2,495	P1S	256	1.15	10.0	91.0	26.929	230/460	9,51
		1200	254/6JP	00712ET3E254JP-W22	$2,495	P1	323	1.25	9.48	91.0	29.106	230/460	
10	7.5	3600	213/5JP	01036ET3E215JP-S	$1,801	P1S	184	1.15	11.5	90.2	25.079	230/460	9
		3600	213/5JP	01036ET3H215JP-S	$1,801	P1S	184	1.15	9.20	90.2	26.654	575	9
		3600	213/5JP	01036ET3E215JP-W22	$1,801	P1	195	1.25	11.6	90.2	24.264	230/460	
		3600	213/5JP	01036ET3H215JP-W22	$1,801	P1	191	1.25	9.28	90.2	24.264	575	
		1800	213/5JP	01018ET3E215JP-S	$1,823	P1S	160	1.15	12.2	91.7	24.291	230/460	9
		1800	213/5JP	01018ET3H215JP-S	$1,823	P1S	160	1.15	9.80	91.7	24.291	575	9
		1800	213/5JP	01018ET3V215JP-S	$1,823	P1S	160	1.15	14.0	91.7	24.291	200/400	9,51
		1800	213/5JP	01018ET3E215JP-W22	$1,823	P1	203	1.25	12.4	91.7	24.264	230/460	
		1800	213/5JP	01018ET3H215JP-W22	$1,823	P1	202	1.25	9.92	91.7	24.264	575	
		1200	254/6JP	01012ET3E256JP-S	$3,103	P1S	287	1.15	13.8	91.0	27.717	230/460	9
		1200	254/6JP	01012ET3E256JP-W22	$3,103	P1	326	1.25	12.9	91.0	29.106	230/460	
15	11	3600	213/5JP	01536ET3E215JP-S	$2,099	P1S	179	1.15	17.0	91.0	26.654	230/460	9;12
		3600	213/5JP	01536ET3H215JP-S	$2,099	P1S	179	1.15	13.6	91.0	26.654	575	9;12
		3600	213/5JP	01536ET3E215JP-W22	$2,099	P1	194	1.25	17.0	91.0	24.264	230/460	12
		3600	254/6JP	01536ET3E254JP-S	$2,629	P1S	217	1.15	17.4	91.0	26.929	230/460	9
		3600	254/6JP	01536ET3V254JP-S	$2,629	P1S	217	1.15	20.0	91.0	26.929	200/400	9
		3600	254/6JP	01536ET3E254JP-W22	$2,629	P1	305	1.25	17.2	91.0	29.106	230/460	
		3600	254/6JP	01536ET3H254JP-W22	$2,629	P1	302	1.25	13.8	91.0	29.106	575	
		1800	254/6JP	01518ET3E254JP-S	$2,653	P1S	251	1.15	18.2	92.4	26.929	230/460	9
		1800	254/6JP	01518ET3H254JP-S	$2,653	P1S	251	1.15	14.6	92.4	26.929	575	9,51
		1800	254/6JP	01518ET3V254JP-S	$2,653	P1S	251	1.15	20.9	92.4	26.929	200/400	9
		1800	254/6JP	01518ET3E254JP-W22	$2,653	P1	353	1.25	18.0	92.4	29.106	230/460	
		1800	254/6JP	01518ET3H254JP-W22	$2,653	P1	353	1.25	14.4	92.4	29.106	575	
		1200	284/6JP	01512ET3E284JP-W22	$3,972	P1	436	1.25	17.9	91.7	31.575	230/460	

continued on next page

Please refer to inside back cover for description of "NOTES"

For detailed specifications, data sheets, drawings and performance curves visit http://www.weg.net

Data subject to change without notice.

JP - TEFC - Three-Phase - *continued*

HP	kW	RPM	Frame	Catalog Number	List Price	Mult. Symbol	Approx. Shipping Weight (lbs)	Service Factor	FL Amps @ High	FL. Eff (%)	"C" Dimension (in)	Voltage (V)	Notes
20	15	3600	254/6JP	02036ET3E256JP-S	$3,018	P1S	258	1.15	22.7	91.0	27.717	230/460	9
		3600	254/6JP	02036ET3H256JP-S	$3,018	P1S	258	1.15	18.2	91.0	27.717	575	9
		3600	254/6JP	02036ET3E256JP-W22	$3,018	P1	330	1.25	23.2	91.0	29.106	230/460	
		3600	254/6JP	02036ET3H256JP-W22	$3,018	P1	327	1.25	18.6	91.0	29.106	575	
		1800	254/6JP	02018ET3E256JP-S	$2,908	P1S	281	1.15	24.7	92.4	27.717	230/460	9
		1800	254/6JP	02018ET3H256JP-S	$2,908	P1S	281	1.15	19.8	93.0	27.717	575	9
		1800	254/6JP	02018ET3V256JP-S	$2,908	P1S	281	1.15	28.4	93.0	27.717	200/400	9
		1800	254/6JP	02018ET3E256JP-W22	$2,908	P1	404	1.25	24.1	93.0	29.106	230/460	
		1800	254/6JP	02018ET3H256JP-W22	$2,908	P1	401	1.25	19.3	93.0	29.106	575	51
		1200	284/6JP	02012ET3E286JP-W22	$5,015	P1	463	1.25	24.2	91.7	31.575	230/460	
25	18.5	3600	254/6JP	02536ET3E256JP-S	$3,296	P1S	269	1.15	28.5	91.7	27.717	230/460	9
		3600	254/6JP	02536ET3H256JP-S	$3,296	P1S	269	1.15	22.8	91.7	27.717	575	9,51
		3600	254/6JP	02536ET3E256JP-W22	$3,296	P1	378	1.00	28.1	91.7	29.106	230/460	
		3600	254/6JP	02536ET3H256JP-W22	$3,296	P1	399	1.00	22.5	91.7	29.106	575	
		3600	284/6JP	02536ET3E284JP-W22	$3,679	P1	422	1.25	28.5	91.7	31.575	230/460	
		3600	284/6JP	02536ET3H284JP-W22	$3,679	P1	421	1.25	22.8	91.7	31.575	575	51
		1800	284/6JP	02518ET3E284JP-W22	$3,797	P1	454	1.25	29.5	93.6	31.575	230/460	
		1800	284/6JP	02518ET3H284JP-W22	$3,797	P1	453	1.25	23.6	93.6	31.575	575	
		1200	324/6JP	02512ET3E324JP-W22	$5,972	P1	535	1.25	30.4	93.0	34.021	230/460	
30	22	3600	284/6JP	03036ET3E286JP-W22	$4,614	P1	441	1.25	33.8	91.7	31.575	230/460	
		3600	284/6JP	03036ET3H286JP-W22	$4,614	P1	463	1.25	27.0	91.7	31.575	575	
		1800	284/6JP	03018ET3E286JP-W22	$4,167	P1	492	1.25	35.1	93.6	31.575	230/460	
		1800	284/6JP	03018ET3H286JP-W22	$4,167	P1	490	1.25	28.1	93.6	31.575	575	
		1200	324/6JP	03012ET3E326JP-W22	$6,690	P1	639	1.25	36.2	93.0	34.021	230/460	
40	30	3600	284/6JP	04036ET3E286JP-W22	$5,475	P1	471	1.00	45.8	92.4	31.575	230/460	37
		3600	284/6JP	04036ET3H286JP-W22	$5,475	P1	617	1.00	36.6	92.4	31.575	575	37
		3600	324/6JP	04036ET3E324JP-W22	$5,628	P1	602	1.25	45.8	92.4	34.021	230/460	
		3600	324/6JP	04036ET3H324JP-W22	$5,628	P1	579	1.25	36.6	92.4	34.021	575	
		1800	324/6JP	04018ET3E324JP-W22	$5,413	P1	625	1.25	47.1	94.1	34.021	230/460	
		1800	324/6JP	04018ET3H324JP-W22	$5,413	P1	608	1.25	37.7	94.1	34.021	575	
		1200	364/5JP	04012ET3E364JP-W22	$9,268	P1	1003	1.25	46.5	94.1	35.916	230/460	
50	37	3600	324/6JP	05036ET3E326JP-W22	$6,733	P1	624	1.25	56.1	93.0	34.021	230/460	
		3600	324/6JP	05036ET3H326JP-W22	$6,733	P1	622	1.25	44.9	93.0	34.021	575	
		1800	324/6JP	05018ET3E326JP-W22	$6,624	P1	648	1.25	59.2	94.5	34.021	230/460	
		1800	324/6JP	05018ET3H326JP-W22	$6,624	P1	645	1.25	47.4	94.5	34.021	575	51
		1200	364/5JP	05012ET3E365JP-W22	$10,748	P1	983	1.25	57.4	94.1	35.916	230/460	51
60	45	3600	324/6JP	06036ET3E326JP-W22	$7,853	P1	627	1.00	70.2	93.6	34.021	230/460	37
		3600	364/5JP	06036ET3E364JP-W22	$10,252	P1	994	1.25	67.0	93.6	36.711	230/460	
		3600	364/5JP	06036ET3H364JP-W22	$10,252	P1	946	1.25	53.6	93.6	36.711	575	
		1800	364/5JP	06018ET3E364JP-W22	$9,619	P1	1056	1.25	68.3	95.0	35.916	230/460	
		1800	364/5JP	06018ET3H364JP-W22	$9,619	P1	1042	1.25	54.6	95.0	35.916	575	
		1200	404/5JP	06012ET3E404JP-W22	$12,444	P1	1156	1.25	69.5	94.5	38.911	230/460	

continued on next page

Please refer to inside back cover for description of "NOTES"

For detailed specifications, data sheets, drawings and performance curves visit http://www.weg.net

CLOSE-COUPLED PUMP TEFC MOTORS

JP - TEFC - Three-Phase - *continued*

HP	kW	RPM	Frame	Catalog Number	List Price	Mult. Symbol	Approx. Shipping Weight (lbs)	Service Factor	FL Amps @ High	FL. Eff (%)	"C" Dimension (in)	Voltage (V)	Notes
75	55	3600	364/5JP	07536ET3E365JP-W22	$11,321	P1	997	1.25	81.9	93.6	36.711	230/460	
		3600	364/5JP	07536ET3G365JP-W22	$11,321	P1	1153	1.25	81.9	93.6	36.711	460	
		3600	364/5JP	07536ET3H365JP-W22	$11,321	P1	997	1.25	65.5	93.6	36.711	575	
		1800	364/5JP	07518ET3E365JP-W22	$10,235	P1	1075	1.25	84.1	95.4	35.916	230/460	
		1800	364/5JP	07518ET3H365JP-W22	$10,235	P1	1044	1.25	67.3	95.4	35.916	575	
		1200	404/5JP	07512ET3E405JP-W22	$14,005	P1	1209	1.25	84.9	94.5	38.911	230/460	
100	75	3600	404/5JP	10036ET3E405JP-W22	$13,949	P1	1203	1.25	110	94.1	40.551	230/460	
		3600	404/5JP	10036ET3G405JP-W22	$13,949	P1	1222	1.25	110	94.1	40.551	460	
		1800	404/5JP	10018ET3E405JP-W22	$12,411	P1	1291	1.25	111	95.4	38.911	230/460	
		1800	404/5JP	10018ET3G405JP-W22	$12,411	P1	1294	1.25	111	95.4	38.911	460	

JP - TEFC - Explosion Proof

HP	kW	RPM	Frame	Catalog Number	List Price	Mult. Symbol	Approx. Shipping Weight (lbs)	Service Factor	FL Amps @ High	FL. Eff (%)	"C" Dimension (in)	Voltage (V)	Notes
3	2.2	1800	182/4JP	00318XT3E182JP	$1,586	XT	119	1.15	3.91	89.5	20.431	230/460	
		1800	182/4JP	00318XT3H182JP	$1,586	XT	119	1.15	3.13	89.5	20.431	575	
5	3.7	1800	182/4JP	00518XT3E184JP	$1,609	XT	136	1.15	6.57	89.5	20.306	230/460	39, 51
		1800	182/4JP	00518XT3H184JP	$1,609	XT	136	1.15	5.26	89.5	20.306	575	39, 51

Please refer to inside back cover for description of "NOTES"

For detailed specifications, data sheets, drawings and performance curves visit http://www.weg.net

Data subject to change without notice.

JM - ODP - Single Phase

HP	kW	RPM	Frame	Catalog Number	List Price	Mult. Symbol	Approx. Shipping Weight (lbs)	Service Factor	FL Amps @ High	FL. Eff (%)	"C" Dimension (in)	Voltage (V)	Notes
3	2.2	3600	182/4JM	**003360S1B182JM**	**$977**	P1CS	111	1.25	11.7	86.0	18.976	115/208-230	9
5	3.7	3600	182/4JM	**005360S1B184JM**	**$1,383**	P1CS	123	1.25	19.0	88.0	18.976	115/208-230	9
7.5	5.5	3600	213/5JM	**007360S1C213JM**	**$1,567**	P1CS	132	1.15	30.2	85.5	18.667	208-230	9
10	7.5	3600	213/5JM	**010360S1C215JM**	**$2,067**	P1CS	132	1.15	42.0	84.0	20.499	208-230	9

JP - ODP - Single Phase

HP	kW	RPM	Frame	Catalog Number	List Price	Mult. Symbol	Approx. Shipping Weight (lbs)	Service Factor	FL Amps @ High	FL. Eff (%)	"C" Dimension (in)	Voltage (V)	Notes
3	2.2	3600	182/4JP	**003360S1B182JP**	**$977**	P1CS	117	1.25	11.7	86.0	21.942	115/208-230	9
5	3.7	3600	182/4JP	**005360S1B184JP**	**$1,383**	P1CS	127	1.25	19.0	88.0	21.942	115/208-230	9
7.5	5.5	3600	213/5JP	**007360S1C213JP**	**$1,567**	P1CS	142	1.15	30.2	85.5	22.558	208-230	9
10	7.5	3600	213/5JP	**010360S1C215JP**	**$2,067**	P1CS	138	1.15	42.0	84.0	24.390	208-230	9

Please refer to inside back cover for description of "NOTES"

For detailed specifications, data sheets, drawings and performance curves visit http://www.weg.net

Pump Motors

CLOSE-COUPLED PUMP ODP MOTORS

JM - ODP - Three Phase

HP	kW	RPM	Frame	Catalog Number	List Price	Mult. Symbol	Approx. Shipping Weight (lbs)	Service Factor	FL Amps @ High	FL. Eff (%)	"C" Dimension (in)	Voltage (V)	Notes
1	0.75	1800	143/5JM	001180T3E143JM-S	$486	P1S	40	1.15	1.50	85.5	13.701	230/460	9
		1800	143/5JM	001180T3H143JM-S	$486	P1S	40	1.15	1.20	85.5	13.701	575	9
		1800	143/5JM	001180T3V143JM-S	$486	P1S	40	1.15	1.70	85.5	13.701	200/400	9
		1200	143/5JM	001120T3E145JM-S	$550	P1S	40	1.15	1.70	82.5	13.701	230/460	9
1.5	1.1	3600	143/5JM	001560T3E143JM-S	$534	P1S	35	1.15	1.90	84.0	13.701	230/460	9
		3600	143/5JM	001560T3V143JM-S	$534	P1S	35	1.15	2.10	84.0	13.701	200/400	9
		1800	143/5JM	001580T3E145JM-S	$553	P1S	47	1.15	2.10	86.5	14.882	230/460	9
		1800	143/5JM	001580T3H145JM-S	$553	P1S	47	1.15	1.70	86.5	14.882	575	9
		1800	143/5JM	001580T3V145JM-S	$553	P1S	47	1.15	2.40	86.5	14.882	200/400	9
		1200	182/4JM	001520T3E182JM-S	$769	P1S	71	1.15	2.30	86.5	15.472	230/460	9
2	1.5	3600	143/5JM	002360T3E145JM-S	$580	P1S	42	1.15	2.40	85.5	14.094	230/460	9
		3600	143/5JM	002360T3H145JM-S	$580	P1S	42	1.15	1.90	85.5	14.094	575	9
		3600	143/5JM	002360T3V145JM-S	$580	P1S	42	1.15	2.80	85.5	14.094	200/400	9
		1800	143/5JM	002180T3E145JM-S	$607	P1S	44	1.15	2.70	86.5	14.882	230/460	9
		1800	143/5JM	002180T3H145JM-S	$607	P1S	44	1.15	2.20	86.5	14.882	575	9
		1800	143/5JM	002180T3V145JM-S	$607	P1S	44	1.15	3.10	86.5	14.882	200/400	9
		1200	182/4JM	002120T3E184JM-S	$816	P1S	83	1.15	3.00	87.5	16.260	230/460	9
3	2.2	3600	143/5JM	003360T3E145JM-S	$660	P1S	45	1.15	3.60	85.5	14.488	230/460	9
		3600	143/5JM	003360T3H145JM-S	$660	P1S	45	1.15	2.90	85.5	14.488	575	9
		3600	143/5JM	003360T3V145JM-S	$660	P1S	45	1.15	4.10	85.5	14.488	200/400	9
		1800	182/4JM	003180T3E182JM-S	$665	P1S	84	1.15	3.90	89.5	16.654	230/460	9
		1800	182/4JM	003180T3H182JM-S	$665	P1S	84	1.15	3.10	89.5	16.654	575	9
		1800	182/4JM	003180T3V182JM-S	$665	P1S	84	1.15	4.40	89.5	16.654	200/400	9
		1200	213/5JM	003120T3E213JM-S	$1,105	P1S	123	1.15	4.20	88.5	17.717	230/460	9
5	3.7	3600	182/4JM	005360T3E182JM-S	$780	P1S	68	1.15	6.10	86.5	15.472	230/460	9
		3600	182/4JM	005360T3H182JM-S	$780	P1S	68	1.15	4.90	86.5	15.472	575	9
		3600	182/4JM	005360T3V182JM-S	$780	P1S	68	1.15	7.00	86.5	15.472	200/400	9
		1800	182/4JM	005180T3E184JM-S	$849	P1S	96	1.15	6.30	89.5	17.835	230/460	9
		1800	182/4JM	005180T3H184JM-S	$849	P1S	96	1.15	5.10	89.5	17.835	575	9
		1800	182/4JM	005180T3V184JM-S	$849	P1S	96	1.15	7.30	89.5	17.835	200/400	9
		1200	213/5JM	005120T3E215JM-S	$1,319	P1S	144	1.15	6.70	89.5	18.110	230/460	9
7.5	5.5	3600	182/4JM	007360T3E184JM-S	$1,086	P1S	77	1.15	8.70	88.5	16.26	230/460	9
		3600	182/4JM	007360T3H184JM-S	$1,086	P1S	77	1.15	6.90	88.5	16.26	575	9
		3600	182/4JM	007360T3V184JM-S	$1,086	P1S	78	1.15	10.0	88.5	16.26	200/400	9
		1800	213/5JM	007180T3E213JM-S	$1,119	P1S	135	1.15	9.30	91.0	17.717	230/460	9
		1800	213/5JM	007180T3H213JM-S	$1,120	P1S	135	1.15	7.40	91.0	17.717	575	9;51
		1800	213/5JM	007180T3V213JM-S	$1,119	P1S	135	1.15	10.6	91.0	17.717	200/400	9
		1200	254/6JM	007120T3E254JM-S	$1,985	P1S	224	1.15	10.2	90.2	21.969	230/460	9
		1200	254JM	007120T3E254JM-W40	$1,985	P1C	243	1.25	9.94	90.2	22.517	230/460	

continued on next page

Please refer to inside back cover for description of "NOTES"

For detailed specifications, data sheets, drawings and performance curves visit http://www.weg.net

Data subject to change without notice.

JM - ODP - Three Phase - *continued*

HP	kW	RPM	Frame	Catalog Number	List Price	Mult. Symbol	Approx. Shipping Weight (lbs)	Service Factor	FL Amps @ High	FL. Eff (%)	"C" Dimension (in)	Voltage (V)	Notes
10	7.5	3600	213/5JM	010360T3E213JM-S	$1,289	P1S	125	1.15	12.0	89.5	17.171	230/460	9
		3600	213/5JM	010360T3H213JM-S	$1,289	P1S	126	1.15	9.60	89.5	17.717	575	9
		3600	213/5JM	010360T3V213JM-S	$1,289	P1S	125	1.15	13.8	89.5	17.717	200/400	9
		1800	213/5JM	010180T3E215JM-S	$1,364	P1S	140	1.15	12.4	91.7	17.717	230/460	9
		1800	213/5JM	010180T3H215JM-S	$1,366	P1S	140	1.15	9.90	91.7	17.717	575	9
		1200	254/6JM	010120T3E256JM-S	$2,298	P1S	252	1.15	13.9	91.7	21.969	230/460	9
		1200	254/6JM	010120T3E256JM-W40	$2,298	P1C	271	1.25	12.8	91.7	24.264	230/460	
15	11	3600	213/5JM	015360T3E215JM-S	$1,707	P1S	151	1.15	17.2	90.2	18.898	230/460	9
		3600	213/5JM	015360T3H215JM-S	$1,707	P1S	151	1.15	13.8	90.2	18.898	575	9
		3600	213/5JM	015360T3V215JM-S	$1,707	P1S	151	1.15	19.8	90.2	18.898	200/400	9
		1800	254/6JM	015180T3E254JM-S	$1,995	P1S	225	1.15	18.6	93.0	21.969	230/460	9
		1800	254/6JM	015180T3H254JM-S	$1,995	P1S	225	1.15	14.9	93.0	21.969	575	9
		1800	254/6JM	015180T3V254JM-S	$1,995	P1S	225	1.15	21.4	93.0	21.969	200/400	9
		1800	254JM	015180T3E254JM-W40	$1,995	P1C	291	1.25	17.5	93.0	22.517	230/460	
		1800	254JM	015180T3H254JM-W40	$1,995	P1C	290	1.25	14.0	93.0	22.517	575	
		1800	254JM	015180T3V254JM-W40	$1,995	P1C	273	1.25	20.1	93.0	22.517	200/400	
		1200	284JM	015120T3E284JM-W40	$3,164	P1C	355	1.25	18.4	91.7	24.033	230/460	
20	15	3600	254/6JM	020360T3E254JM-S	$2,107	P1S	206	1.15	23.8	91.0	21.969	230/460	9
		3600	254/6JM	020360T3H254JM-S	$2,107	P1S	206	1.15	19.0	91.0	21.969	575	9
		3600	254/6JM	020360T3V254JM-S	$2,107	P1S	206	1.15	27.4	91.0	21.969	200/400	9
		3600	254JM	020360T3E254JM-W40	$2,107	P1C	237	1.25	24.3	91.0	22.517	230/460	
		3600	254JM	020360T3H254JM-W40	$2,107	P1C	236	1.25	19.4	91.0	22.517	575	
		3600	254JM	020360T3V254JM-W40	$2,107	P1C	236	1.25	28.0	91.0	22.517	200/400	
		1800	254/6JM	020180T3E256JM-S	$2,413	P1S	250	1.15	25.0	93.0	21.969	230/460	9
		1800	254/6JM	020180T3H256JM-S	$2,413	P1S	250	1.15	20.0	93.0	21.969	575	9
		1800	254/6JM	020180T3E256JM-W40	$2,413	P1C	326	1.25	24.1	93.0	24.264	230/460	
		1800	254/6JM	020180T3H256JM-W40	$2,413	P1C	326	1.25	19.3	93.0	24.264	575	
		1200	284/6JM	020120T3E286JM-W40	$3,872	P1C	430	1.25	24.3	92.4	25.533	230/460	
25	18.5	3600	254/6JM	025360T3E256JM-S	$2,598	P1S	217	1.15	29.1	91.7	21.969	230/460	9
		3600	254/6JM	025360T3H256JM-S	$2,598	P1S	217	1.15	23.3	91.7	21.969	575	9
		3600	254/6JM	025360T3E256JM-W40	$2,598	P1C	266	1.25	28.8	91.7	24.264	230/460	
		3600	254/6JM	025360T3H256JM-W40	$2,598	P1C	263	1.25	23.0	91.7	24.264	575	
		1800	284JM	025180T3E284JM-W40	$2,912	P1C	397	1.25	29.5	93.6	24.033	230/460	
		1800	284JM	025180T3H284JM-W40	$2,912	P1C	400	1.25	23.6	93.6	24.033	575	
		1200	324JM	025120T3E324JM-W40	$4,306	P1C	514	1.25	30.8	93.0	26.057	230/460	
30	22	3600	284JM	030360T3E284JM-W40	$3,185	P1C	350	1.25	35.0	91.7	24.033	230/460	
		3600	284JM	030360T3H284JM-W40	$3,185	P1C	373	1.25	28.0	91.7	24.033	575	
		3600	284JM	030360T3V284JM-W40	$3,185	P1C	373	1.25	40.3	91.7	24.033	200/400	
		1800	284/6JM	030180T3E286JM-W40	$3,368	P1C	443	1.25	34.9	94.1	25.533	230/460	
		1800	284/6JM	030180T3H286JM-W40	$3,368	P1C	452	1.25	27.9	94.1	25.533	575	
		1200	324/6JM	030120T3E326JM-W40	$4,741	P1C	561	1.25	36.0	93.6	27.557	230/460	

continued on next page

Please refer to inside back cover for description of "NOTES"

For detailed specifications, data sheets, drawings and performance curves visit http://www.weg.net

CLOSE-COUPLED PUMP ODP MOTORS

JM - ODP - Three Phase - *continued*

HP	kW	RPM	Frame	Catalog Number	List Price	Mult. Symbol	Approx. Shipping Weight (lbs)	Service Factor	FL Amps @ High	FL. Eff (%)	"C" Dimension (in)	Voltage (V)	Notes
40	30	3600	284/6JM	040360T3E286JM-W40	$3,811	P1C	394	1.25	46.8	92.4	25.533	230/460	
		3600	284/6JM	040360T3H286JM-W40	$3,811	P1C	411	1.25	37.4	92.4	25.533	575	
		1800	324JM	040180T3E324JM-W40	$3,797	P1C	494	1.25	47.6	94.1	26.057	230/460	
		1800	324JM	040180T3H324JM-W40	$3,797	P1C	520	1.25	38.1	94.1	26.057	575	
		1200	364/5JM	040120T3E364JM-W40	$6,696	P1C	849	1.25	47.1	94.1	29.270	230/460	
50	37	3600	324JM	050360T3E324JM-W40	$4,607	P1C	474	1.25	58.7	93.0	26.057	230/460	
		3600	324JM	050360T3G324JM-W40	$4,607	P1C	522	1.25	58.7	93.0	26.057	460	
		3600	324JM	050360T3H324JM-W40	$4,607	P1C	523	1.25	47.0	93.0	26.057	575	
		1800	324/6JM	050180T3E326JM-W40	$4,877	P1C	557	1.25	58.5	94.5	27.557	230/460	
		1800	324/6JM	050180T3H326JM-W40	$4,877	P1C	596	1.25	46.8	94.5	27.557	575	
		1200	364/5JM	050120T3E365JM-W40	$7,666	P1C	884	1.25	58.1	94.1	29.270	230/460	
60	45	3600	324/6JM	060360T3E326JM-W40	$5,432	P1C	519	1.25	71.0	93.6	27.557	230/460	
		3600	324/6JM	060360T3G326JM-W40	$5,432	P1C	517	1.25	71.0	93.6	27.557	460	
		3600	324/6JM	060360T3H326JM-W40	$5,432	P1C	564	1.25	56.8	93.6	27.557	575	
		1800	364/5JM	060180T3E364JM-W40	$5,994	P1C	876	1.25	69.9	95.0	29.270	230/460	51
		1800	364/5JM	060180T3G364JM-W40	$5,994	P1C	847	1.25	69.9	95.0	29.270	460	
		1800	364/5JM	060180T3H364JM-W40	$5,994	P1C	847	1.25	55.9	95.0	29.270	575	
75	55	3600	364/5JM	075360T3E364JM-W40	$6,951	P1C	815	1.25	84.8	93.6	29.270	230/460	
		3600	364/5JM	075360T3G364JM-W40	$6,951	P1C	794	1.25	84.8	93.6	29.270	460	
		3600	364/5JM	075360T3H364JM-W40	$6,951	P1C	794	1.25	67.8	93.6	29.270	575	
		1800	364/5JM	075180T3E365JM-W40	$6,932	P1C	875	1.25	85.5	95.0	29.270	230/460	
		1800	364/5JM	075180T3G365JM-W40	$6,932	P1C	875	1.25	85.5	95.0	29.270	460	
		1800	364/5JM	075180T3H365JM-W40	$6,932	P1C	875	1.25	68.4	95.0	29.270	575	
100	75	3600	364/5JM	100360T3E365JM-W40	$8,683	P1C	835	1.25	116	93.6	29.270	230/460	
		3600	364/5JM	100360T3G365JM-W40	$8,683	P1C	865	1.25	116	93.6	29.270	460	

Please refer to inside back cover for description of "NOTES"

For detailed specifications, data sheets, drawings and performance curves visit http://www.weg.net

Data subject to change without notice.

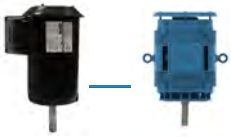

JM - ODP - Three Phase - Footless Vertical

HP	kW	RPM	Frame	Catalog Number	List Price	Mult. Symbol	Approx. Shipping Weight (lbs)	Service Factor	FL Amps @ High	FL. Eff (%)	"C" Dimension (in)	Voltage (V)	Notes
1	0.75	1800	143/5JM	001180T3E143JMV-S	$541	P1S	40	1.15	1.50	85.5	15.001	230/460	9;15
		1200	143/5JM	001120T3E145JMV-S	$605	P1S	40	1.15	1.70	82.5	15.001	230/460	9;15
1.5	1.1	3600	143/5JM	001560T3E143JMV-S	$589	P1S	35	1.15	1.90	84.0	15.001	230/460	9;15
		1800	143/5JM	001580T3E145JMV-S	$608	P1S	47	1.15	2.10	86.5	16.182	230/460	9;15
		1200	182/4JM	001520T3E182JMV-S	$827	P1S	71	1.15	2.30	86.5	16.812	230/460	9;15
2	1.5	3600	143/5JM	002360T3E145JMV-S	$635	P1S	42	1.15	2.40	85.5	15.394	230/460	9;15
		1800	143/5JM	002180T3E145JMV-S	$662	P1S	44	1.15	2.70	86.5	16.182	230/460	9;15
		1200	182/4JM	002120T3E184JMV-S	$874	P1S	83	1.15	3.00	87.5	17.600	230/460	9;15
3	2.2	3600	143/5JM	003360T3E145JMV-S	$715	P1S	45	1.15	3.60	85.5	15.788	230/460	9;15
		1800	182/4JM	003180T3E182JMV-S	$723	P1S	84	1.15	3.90	89.5	17.994	230/460	9;15
		1200	213/5JM	003120T3E213JMV-S	$1,187	P1S	123	1.15	4.20	88.5	18.977	230/460	9;15
5	3.7	3600	182/4JM	005360T3E182JMV-S	$838	P1S	66	1.15	6.10	86.5	16.850	230/460	9;15
		1800	182/4JM	005180T3E184JMV-S	$907	P1S	96	1.15	6.30	89.5	19.175	230/460	9;15
		1200	213/5JM	005120T3E215JMV-S	$1,401	P1S	144	1.15	6.70	89.5	19.370	230/460	9;15
7.5	5.5	3600	182/4JM	007360T3E184JMV-S	$1,144	P1S	68	1.15	8.70	88.5	17.638	230/460	9;15
		3600	182/4JM	007360T3H184JMV-S	$1,144	P1S	68	1.15	6.90	88.5	17.638	575	9;15
		3600	182/4JM	007360T3V184JMV-S	$1,144	P1S	76	1.15	10.0	88.5	18.031	200/400	9;15,51
		1800	213/5JM	007180T3E213JMV-S	$1,201	P1S	135	1.15	9.30	91.0	18.977	230/460	9;15
10	7.5	3600	213/5JM	010360T3E213JMV-S	$1,371	P1S	122	1.15	12.0	89.5	19.646	230/460	9;15
		3600	213/5JM	010360T3H213JMV-S	$1,371	P1S	132	1.15	9.60	89.5	19.370	575	9;15
		3600	213/5JM	010360T3V213JMV-S	$1,371	P1S	132	1.15	13.8	89.5	19.370	200/400	9;15,51
		1800	213/5JM	010180T3E215JMV-S	$1,446	P1S	140	1.15	12.4	91.7	18.977	230/460	9;15
		1800	213/5JM	010180T3H215JMV-S	$1,448	P1S	140	1.15	9.90	91.7	18.977	575	9;15
15	11	3600	213/5JM	015360T3E215JMV-S	$1,789	P1S	151	1.15	17.2	90.2	20.158	230/460	9;15
		3600	213/5JM	015360T3H215JMV-S	$1,789	P1S	151	1.15	13.8	90.2	20.158	575	9;15,51
		3600	213/5JM	015360T3V215JMV-S	$1,789	P1S	151	1.15	19.8	90.2	20.158	200/400	9;15
		1800	254/6JM	015180T3E254JMV-S	$2,147	P1S	175	1.15	18.6	93.0	23.898	230/460	9;15,51
20	15	3600	254/6JM	020360T3E254JMV-S	$2,205	P1S	206	1.15	23.8	91.0	23.359	230/460	9;15
		3600	254/6JM	020360T3H254JMV-S	$2,205	P1S	206	1.15	19.0	91.0	23.359	575	9;15
		3600	254/6JM	020360T3V254JMV-S	$2,205	P1S	206	1.15	27.4	91.0	23.359	200/400	9;15
		1800	254/6JM	020180T3E256JMV-S	$2,580	P1S	198	1.15	25.0	93.0	23.898	230/460	9;15,51
25	18.5	3600	254/6JM	025360T3E256JMV-S	$2,696	P1S	217	1.15	29.1	91.7	23.359	230/460	9;15
		3600	254/6JM	025360T3H256JMV-S	$2,696	P1S	217	1.15	23.3	91.7	23.359	575	9;15,51
		3600	254/6JM	025360T3V256JMV-S	$2,696	P1S	217	1.15	33.5	91.7	23.359	200/400	9;15
		1800	284/6JM	025180T3E284JMV-W40	$3,137	P1C	421	1.25	29.5	93.6	27.403	230/460	15,51
30	22	3600	284/6JM	030360T3H284JMV-W40	$3,422	P1C	370	1.25	28.0	91.7	27.403	575	15
		1800	284/6JM	030180T3H286JMV-W40	$3,610	P1C	458	1.25	27.9	94.1	27.403	575	15
40	30	3600	284/6JM	040360T3E286JMV-W40	$4,066	P1C	409	1.25	46.8	92.4	27.403	230/460	15
		3600	284/6JM	040360T3H286JMV-W40	$4,066	P1C	408	1.25	37.4	92.4	27.403	575	15
		1800	324/6JM	040180T3E324JMV-W40	$4,431	P1C	514	1.25	47.6	94.1	29.427	230/460	15
50	37	3600	324/6JM	050360T3E324JMV-W40	$4,911	P1C	494	1.25	58.7	93.0	29.427	230/460	15
		3600	324/6JM	050360T3H324JMV-W40	$4,911	P1C	485	1.25	47.0	93.0	29.427	575	15
		3600	324/6JM	050360T3V324JMV-W40	$4,911	P1C	499	1.25	67.5	93.0	29.427	200/400	15
		1800	324/6JM	050180T3H326JMV-W40	$5,189	P1C	555	1.25	46.8	94.5	29.427	575	15
60	45	3600	324/6JM	060360T3H326JMV-W40	$5,761	P1C	524	1.25	56.8	93.6	29.427	575	15
75	55	3600	364/5JM	075360T3H364JMV-W40	$7,351	P1C	814	1.25	67.8	93.6	31.865	575	15

** To be discontinued and replaced by W40 model once inventory is depleted.*

Please refer to inside back cover for description of "NOTES"

For detailed specifications, data sheets, drawings and performance curves visit http://www.weg.net

CLOSE-COUPLED PUMP ODP MOTORS

JP - ODP - Three Phase

HP	kW	RPM	Frame	Catalog Number	List Price	Mult. Symbol	Approx. Shipping Weight (lbs)	Service Factor	FL Amps @ High	FL. Eff (%)	"C" Dimension (in)	Voltage (V)	Notes
1	0.75	1800	143/5JP	00118OT3E143JP-S	$486	P1S	40	1.15	1.50	85.5	16.772	230/460	9,51
		1200	143/5JP	00112OT3E145JP-S	$550	P1S	48	1.15	1.70	82.5	16.772	230/460	9
1.5	1.1	3600	143/5JP	00156OT3E143JP-S	$534	P1S	35	1.15	1.90	84.0	16.772	230/460	9
		3600	143/5JP	00156OT3V143JP-S	$534	P1S	35	1.15	2.10	84.0	16.772	200/400	9
		1800	143/5JP	00158OT3E145JP-S	$553	P1S	47	1.15	2.10	86.5	17.953	230/460	9,51
		1200	182/4JP	00152OT3E182JP-S	$729	P1S	77	1.15	2.30	86.5	18.543	230/460	9
2	1.5	3600	143/5JP	00236OT3E145JP-S	$580	P1S	42	1.15	2.40	85.5	17.165	230/460	9
		3600	143/5JP	00236OT3V145JP-S	$580	P1S	42	1.15	2.80	85.5	17.165	200/400	9
		1800	143/5JP	00218OT3E145JP-S	$607	P1S	45	1.15	2.70	86.5	17.953	230/460	9
		1200	182/4JP	00212OT3E184JP-S	$863	P1S	86	1.15	3.00	87.5	19.331	230/460	9
3	2.2	3600	143/5JP	00336OT3E145JP-S	$660	P1S	45	1.15	3.60	85.5	17.559	230/460	9
		3600	143/5JP	00336OT3H145JP-S	$660	P1S	45	1.15	2.90	85.5	17.559	575	9
		3600	143/5JP	00336OT3V145JP-S	$660	P1S	45	1.15	4.10	85.5	17.559	200/400	9
		1800	182/4JP	00318OT3E182JP-S	$665	P1S	85	1.15	3.90	89.5	19.724	230/460	9
		1800	182/4JP	00318OT3H182JP-S	$665	P1S	85	1.15	3.10	89.5	19.724	575	9
		1200	213/5JP	00312OT3E213JP-S	$1,095	P1S	132	1.15	4.20	88.5	21.575	230/460	9
5	3.7	3600	182/4JP	00536OT3E182JP-S	$792	P1S	74	1.15	6.10	86.5	18.543	230/460	9
		3600	182/4JP	00536OT3H182JP-S	$792	P1S	74	1.15	4.90	86.5	19.331	575	9
		3600	182/4JP	00536OT3V182JP-S	$792	P1S	63	1.15	7.00	86.5	18.543	200/400	9
		1800	182/4JP	00518OT3E184JP-S	$848	P1S	99	1.15	6.30	89.5	20.906	230/460	9
		1800	182/4JP	00518OT3H184JP-S	$848	P1S	99	1.15	5.10	89.5	20.906	575	9,51
		1200	213/5JP	00512OT3E215JP-S	$1,321	P1S	132	1.15	6.70	89.5	21.969	230/460	9
7.5	5.5	3600	182/4JP	00736OT3E184JP-S	$1,086	P1S	78	1.15	8.70	88.5	19.724	230/460	9
		3600	182/4JP	00736OT3H184JP-S	$1,086	P1S	89	1.15	6.90	88.5	19.724	575	9
		3600	182/4JP	00736OT3V184JP-S	$1,086	P1S	70	1.15	10.0	88.5	19.724	200/400	9
		1800	213/5JP	00718OT3E213JP-S	$1,120	P1S	144	1.15	9.30	91.0	21.575	230/460	9
		1800	213/5JP	00718OT3H213JP-S	$1,120	P1S	144	1.15	7.40	91.0	21.575	575	9
		1800	213/5JP	00718OT3V213JP-S	$1,120	P1S	144	1.15	10.6	91.0	21.575	200/400	9
		1200	254/6JP	00712OT3E254JP-S	$2,113	P1S	226	1.15	10.2	90.2	24.843	230/460	9,51
		1200	254JP	00712OT3E254JP-W40	$2,113	P1C	245	1.25	9.94	90.2	25.398	230/460	
10	7.5	3600	213/5JP	01036OT3E213JP-S	$1,289	P1S	144	1.15	12.0	89.5	21.575	230/460	9
		3600	213/5JP	01036OT3H213JP-S	$1,289	P1S	144	1.15	9.60	89.5	21.969	575	9
		3600	213/5JP	01036OT3V213JP-S	$1,289	P1S	144	1.15	13.8	89.5	21.969	200/400	9
		1800	213/5JP	01018OT3E215JP-S	$1,366	P1S	149	1.15	12.4	91.7	21.575	230/460	9
		1800	213/5JP	01018OT3H215JP-S	$1,366	P1S	149	1.15	9.90	91.7	21.575	575	9
		1800	213/5JP	01018OT3V215JP-S	$1,366	P1S	149	1.15	14.3	91.7	21.575	200/400	9
		1200	254/6JP	01012OT3E256JP-S	$2,298	P1S	254	1.15	13.9	91.7	24.843	230/460	9
		1200	254/6JP	01012OT3E256JP-W40	$2,298	P1C	271	1.25	12.8	91.7	27.146	230/460	

continued on next page

Please refer to inside back cover for description of "NOTES"

For detailed specifications, data sheets, drawings and performance curves visit http://www.weg.net

Data subject to change without notice.

JP - ODP - Three Phase - *continued*

HP	kW	RPM	Frame	Catalog Number	List Price	Mult. Symbol	Approx. Shipping Weight (lbs)	Service Factor	FL Amps @ High	FL. Eff (%)	"C" Dimension (in)	Voltage (V)	Notes
15	11	3600	213/5JP	015360T3E215JP-S	$1,707	P1S	160	1.15	17.2	90.2	22.756	230/460	9
		3600	213/5JP	015360T3H215JP-S	$1,707	P1S	160	1.15	13.8	90.2	22.756	575	9
		3600	213/5JP	015360T3V215JP-S	$1,707	P1S	160	1.15	19.8	90.2	22.756	200/400	9
		1800	254/6JP	015180T3E254JP-S	$1,995	P1S	228	1.15	18.6	93.0	24.843	230/460	9
		1800	254/6JP	015180T3H254JP-S	$1,995	P1S	228	1.15	14.9	93.0	24.843	575	9,51
		1800	254JP	015180T3E254JP-W40	$1,995	P1C	293	1.25	17.5	93.0	25.398	230/460	
		1800	254JP	015180T3H254JP-W40	$1,995	P1C	269	1.25	14.0	93.0	25.398	575	
		1200	284JP	015120T3E284JP-W40	$3,163	P1C	359	1.25	18.4	91.7	26.913	230/460	
20	15	3600	254/6JP	020360T3E254JP-S	$2,106	P1S	204	1.15	23.8	91.0	24.843	230/460	9
		3600	254/6JP	020360T3H254JP-S	$2,106	P1S	204	1.15	19.0	91.0	24.843	575	9,51
		3600	254/6JP	020360T3V254JP-S	$2,106	P1S	204	1.15	27.4	91.0	24.843	200/400	9,51
		3600	254JP	020360T3E254JP-W40	$2,106	P1C	239	1.25	24.3	91.0	25.398	230/460	
		3600	254JP	020360T3H254JP-W40	$2,106	P1C	238	1.25	19.4	91.0	25.398	575	51
		3600	254JP	020360T3V254JP-W40	$2,106	P1C	278	1.25	28.0	91.0	25.398	200/400	
		1800	254/6JP	020180T3E256JP-S	$2,413	P1S	252	1.15	25.0	93.0	24.843	230/460	9
		1800	254/6JP	020180T3H256JP-S	$2,413	P1S	252	1.15	20.0	93.0	24.843	575	9
		1800	254/6JP	020180T3E256JP-W40	$2,413	P1C	329	1.25	24.1	93.0	27.146	230/460	
		1800	254/6JP	020180T3H256JP-W40	$2,413	P1C	328	1.25	19.3	93.0	27.146	575	
		1200	284/6JP	020120T3E286JP-W40	$3,871	P1C	434	1.25	24.3	92.4	28.413	230/460	51
25	18.5	3600	254/6JP	025360T3E256JP-S	$2,599	P1S	218	1.15	29.1	91.7	24.843	230/460	9
		3600	254/6JP	025360T3H256JP-S	$2,599	P1S	218	1.15	23.3	91.7	24.843	575	9,51
		3600	254/6JP	025360T3V256JP-S	$2,599	P1S	218	1.15	33.5	91.7	24.843	200/400	9
		3600	254/6JP	025360T3E256JP-W40	$2,599	P1C	269	1.25	28.8	91.7	27.146	230/460	
		3600	254/6JP	025360T3H256JP-W40	$2,599	P1C	310	1.25	23.0	91.7	27.146	575	
		3600	254/6JP	025360T3V256JP-W40	$2,599	P1C	310	1.25	33.1	91.7	27.146	200/400	
		1800	284JP	025180T3E284JP-W40	$2,911	P1C	400	1.25	29.5	93.6	26.913	230/460	
		1800	284JP	025180T3H284JP-W40	$2,911	P1C	400	1.25	23.6	93.6	26.913	575	
		1200	324JP	025120T3E324JP-W40	$4,306	P1C	516	1.25	30.8	93.0	28.937	230/460	
30	22	3600	284JP	030360T3E284JP-W40	$3,185	P1C	354	1.25	35.0	91.7	26.913	230/460	
		3600	284JP	030360T3H284JP-W40	$3,185	P1C	367	1.25	28.0	91.7	26.913	575	
		3600	284JP	030360T3V284JP-W40	$3,185	P1C	422	1.25	40.3	91.7	26.913	200/400	
		1800	284/6JP	030180T3E286JP-W40	$3,367	P1C	447	1.25	34.9	94.1	28.413	230/460	
		1800	284/6JP	030180T3H286JP-W40	$3,367	P1C	453	1.25	27.9	94.1	28.413	575	
		1800	284/6JP	030180T3V286JP-W40	$3,367	P1C	447	1.25	40.1	94.1	28.413	200/400	51
		1200	324/6JP	030120T3E326JP-W40	$4,980	P1C	602	1.25	36.0	93.6	30.437	230/460	51
40	30	3600	284/6JP	040360T3E286JP-W40	$3,811	P1C	398	1.25	46.8	92.4	28.413	230/460	
		3600	284/6JP	040360T3H286JP-W40	$3,811	P1C	397	1.25	37.4	92.4	28.413	575	51
		3600	284/6JP	040360T3V286JP-W40	$3,811	P1C	532	1.25	53.8	92.4	28.413	200/400	
		1800	324JP	040180T3E324JP-W40	$3,797	P1C	499	1.25	47.6	94.1	28.937	230/460	
		1800	324JP	040180T3H324JP-W40	$3,797	P1C	491	1.25	38.1	94.1	28.937	575	51
		1800	324JP	040180T3V324JP-W40	$3,797	P1C	575	1.25	54.7	94.1	28.937	200/400	
		1200	364/5JP	040120T3E364JP-W40	$7,444	P1C	849	1.25	47.1	94.1	32.150	230/460	

continued on next page

Please refer to inside back cover for description of "NOTES"

For detailed specifications, data sheets, drawings and performance curves visit http://www.weg.net

CLOSE-COUPLED PUMP ODP MOTORS

JP - ODP - Three Phase - *continued*

HP	kW	RPM	Frame	Catalog Number	List Price	Mult. Symbol	Approx. Shipping Weight (lbs)	Service Factor	FL Amps @ High	FL. Eff (%)	"C" Dimension (in)	Voltage (V)	Notes
50	37	3600	324JP	050360T3E324JP-W40	$4,607	P1C	479	1.25	58.7	93.0	28.937	230/460	
		3600	324JP	050360T3G324JP-W40	$4,607	P1C	477	1.25	58.7	93.0	28.937	460	
		3600	324JP	050360T3H324JP-W40	$4,607	P1C	525	1.25	47.0	93.0	28.937	575	51
		3600	324JP	050360T3V324JP-W40	$4,607	P1C	527	1.25	67.5	93.0	28.937	200/400	
		1800	324/6JP	050180T3E326JP-W40	$4,878	P1C	562	1.25	58.5	94.5	30.437	230/460	
		1800	324/6JP	050180T3H326JP-W40	$4,878	P1C	599	1.25	46.8	94.5	30.437	575	
		1200	364/5JP	050120T3E365JP-W40	$7,666	P1C	884	1.25	58.1	94.1	32.150	230/460	
60	45	3600	324/6JP	060360T3E326JP-W40	$5,432	P1C	524	1.25	71.0	93.6	30.437	230/460	
		3600	324/6JP	060360T3G326JP-W40	$5,432	P1C	522	1.25	71.0	93.6	30.437	460	
		3600	324/6JP	060360T3H326JP-W40	$5,432	P1C	521	1.25	56.8	93.6	30.437	575	51
		3600	324/6JP	060360T3V326JP-W40	$5,432	P1C	628	1.25	81.7	93.6	30.437	200/400	
		1800	364/5JP	060180T3E364JP-W40	$5,994	P1C	880	1.25	69.9	95.0	32.150	230/460	
		1800	364/5JP	060180T3G364JP-W40	$5,994	P1C	847	1.25	69.9	95.0	32.150	460	
		1800	364/5JP	060180T3H364JP-W40	$5,994	P1C	847	1.25	55.9	95.0	32.150	575	
		1200	404/5JP	060120T3E404JP-W40	$9,462	P1C	1051	1.25	70.3	94.5	35.152	230/460	
75	55	3600	364/5JP	075360T3E364JP-W40	$7,699	P1C	819	1.25	84.8	93.6	32.150	230/460	
		3600	364/5JP	075360T3G364JP-W40	$7,699	P1C	794	1.25	84.8	93.6	32.150	460	
		3600	364/5JP	075360T3H364JP-W40	$7,699	P1C	794	1.25	67.8	93.6	32.150	575	
		3600	364/5JP	075360T3V364JP-W40	$7,699	P1C	794	1.25	97.5	93.6	32.150	200/400	
		1800	364/5JP	075180T3E365JP-W40	$6,932	P1C	904	1.25	85.5	95.0	32.150	230/460	
		1800	364/5JP	075180T3G365JP-W40	$6,932	P1C	875	1.25	85.5	95.0	32.150	460	
		1800	364/5JP	075180T3H365JP-W40	$6,932	P1C	875	1.25	68.4	95.0	32.150	575	
		1200	404/5JP	075120T3E405JP-W40	$9,762	P1C	1087	1.25	85.9	94.5	35.152	230/460	
100	75	3600	364/5JP	100360T3E365JP-W40	$8,173	P1C	835	1.25	116	93.6	32.150	230/460	
		3600	364/5JP	100360T3G365JP-W40	$8,173	P1C	835	1.25	116	93.6	32.150	460	
		1800	404/5JP	100180T3E404JP-W40	$8,783	P1C	1079	1.25	115	95.4	35.152	230/460	
		1800	404/5JP	100180T3G404JP-W40	$8,783	P1C	1070	1.25	115	95.4	35.152	460	
125	125	3600	404/5JP	125360T3G404JP-W40	$10,563	P1C	955	1.25	136	94.1	35.152	460	
		1800	404/5JP	125180T3G405JP-W40	$10,317	P1C	1156	1.25	138	95.4	35.152	460	
150	110	3600	404/5JP	150360T3G405JP-W40	$13,922	P1C	1004	1.25	167	94.1	35.152	460	

Please refer to inside back cover for description of "NOTES"

For detailed specifications, data sheets, drawings and performance curves visit http://www.weg.net

Data subject to change without notice.

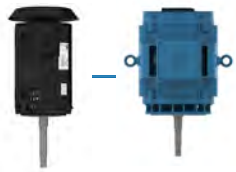

JP - ODP - Three Phase - Footless Vertical

HP	kW	RPM	Frame	Catalog Number	List Price	Mult. Symbol	Approx. Shipping Weight (lbs)	Service Factor	FL Amps @ High	FL. Eff (%)	"C" Dimension (in)	Voltage (V)	Notes
1.5	1.1	3600	143/5JP	001560T3E143JPV-S	$589	P1S	35	1.15	1.90	84.0	18.072	230/460	9;15
2	1.5	3600	143/5JP	002360T3E145JPV-S	$635	P1S	42	1.15	2.40	85.5	18.465	230/460	9;15
3	2.2	3600	143/5JP	003360T3E145JPV-S	$715	P1S	45	1.15	3.60	85.5	18.859	230/460	9;15
5	3.7	3600	182/4JP	005360T3E182JPV-S	$850	P1S	68	1.15	6.10	86.5	19.921	230/460	9;15
7.5	5.5	3600	182/4JP	007360T3E184JPV-S	$1,144	P1S	76	1.15	8.70	88.5	21.102	230/460	9;15,51
		3600	182/4JP	007360T3V184JPV-S	$1,144	P1S	89	1.15	10.0	88.5	21.102	200/400	9;15,51
		1200	254/6JP	007120T3E254JPV-S	$2,211	P1S	226	1.15	10.2	90.2	26.233	230/460	9;15
10	7.5	3600	213/5JP	010360T3E213JPV-S	$1,371	P1S	144	1.15	12.0	89.5	23.504	230/460	9;15
		3600	213/5JP	010360T3H213JPV-S	$1,371	P1S	144	1.15	9.60	89.5	23.229	575	9;15
		3600	213/5JP	010360T3V213JPV-S	$1,371	P1S	125	1.15	13.8	89.5	23.898	200/400	9;15,51
		1200	254/6JP	010120T3E256JPV-S	$2,396	P1S	254	1.15	13.9	91.7	26.233	230/460	9;15
15	11	3600	213/5JP	015360T3E215JPV-S	$1,789	P1S	160	1.15	17.2	90.2	24.016	230/460	9;15
		3600	213/5JP	015360T3H215JPV-S	$1,789	P1S	160	1.15	13.8	90.2	24.016	575	9;15
		3600	213/5JP	015360T3V215JPV-S	$1,789	P1S	160	1.15	19.8	90.2	24.016	200/400	9;15,51
		1800	254/6JP	015180T3V254JPV-S	$2,093	P1S	228	1.15	21.4	93.0	26.233	200/400	9;15
		1200	284/6JP	015120T3E284JPV-W40	$3,399	P1C	382	1.25	18.4	91.7	30.283	230/460	15
20	15	3600	254/6JP	020360T3E254JPV-S	$2,204	P1S	208	1.15	23.8	91.0	26.233	230/460	9;15
		3600	254/6JP	020360T3H254JPV-S	$2,204	P1S	208	1.15	19.0	91.0	26.233	575	9;15,51
		3600	254/6JP	020360T3V254JPV-S	$2,204	P1S	208	1.15	27.4	91.0	26.233	200/400	9;15,51
		1800	254/6JP	020180T3E256JPV-S	$2,580	P1S	198	1.15	25.0	93.0	26.772	230/460	9;15,51
25	18.5	3600	254/6JP	025360T3E256JPV-S	$2,697	P1S	222	1.15	29.1	91.7	26.233	230/460	9;15
		3600	254/6JP	025360T3H256JPV-S	$2,697	P1S	222	1.15	23.3	91.7	26.233	575	9;15,51
		3600	254/6JP	025360T3V256JPV-S	$2,697	P1S	222	1.15	33.5	91.7	26.233	200/400	9;15,51
		1800	284/6JP	025180T3E284JPV-W40	$3,137	P1C	423	1.25	29.5	93.6	30.283	230/460	15,51
30	22	3600	284JP	030360T3E284JPV*	$3,422	P1C	381	1.15	34.7	91.7	29.464	230/460	15
		3600	284JP	030360T3V284JPV*	$3,422	P1C	381	1.15	39.9	91.7	29.464	200/400	15
		3600	284/6JP	030360T3E284JPV-W40	$3,422	P1C	377	1.25	35.0	91.7	30.283	230/460	15
		3600	284/6JP	030360T3H284JPV-W40	$3,422	P1C	372	1.25	28.0	91.7	30.283	575	15;51
		3600	284/6JP	030360T3V284JPV-W40	$3,422	P1C	381	1.25	40.3	91.7	30.283	200/400	15
		1800	284/6JP	030180T3E286JPV-W40	$3,609	P1C	460	1.25	34.9	94.1	30.283	230/460	15
40	30	3600	286JP	040360T3E286JPV*	$4,066	P1C	425	1.15	47.1	92.4	30.957	230/460	15
		3600	286JP	040360T3V286JPV*	$4,066	P1C	425	1.15	54.2	92.4	30.957	200/400	15
		3600	284/6JP	040360T3E286JPV-W40	$4,066	P1C	411	1.25	46.8	92.4	30.283	230/460	15
		3600	284/6JP	040360T3V286JPV-W40	$4,066	P1C	414	1.25	53.8	92.4	30.283	200/400	15
		1800	324/6JP	040180T3E324JPV-W40	$4,077	P1C	515	1.25	47.6	94.1	32.307	230/460	15
		1800	324/6JP	040180T3V324JPV-W40	$4,077	P1C	520	1.25	54.7	94.1	32.307	200/400	15

continued on next page

Please refer to inside back cover for description of "NOTES"

For detailed specifications, data sheets, drawings and performance curves visit http://www.weg.net

CLOSE-COUPLED PUMP ODP MOTORS

JP - ODP - Three Phase - Footless Vertical - *continued*

HP	kW	RPM	Frame	Catalog Number	List Price	Mult. Symbol	Approx. Shipping Weight (lbs)	Service Factor	FL Amps @ High	FL. Eff (%)	"C" Dimension (in)	Voltage (V)	Notes
50	37	3600	324JP	050360T3E324JPV*	$4,911	P1C	533	1.15	59.1	93.0	32.027	230/460	15
		3600	324JP	050360T3V324JPV*	$4,911	P1C	534	1.15	68.0	93.0	32.027	200/400	15
		3600	324/6JP	050360T3E324JPV-W40	$4,911	P1C	495	1.25	58.7	93.0	32.307	230/460	15
		3600	324/6JP	050360T3H324JPV-W40	$4,911	P1C	486	1.25	47.0	93.0	32.307	575	15
		3600	324/6JP	050360T3V324JPV-W40	$4,911	P1C	500	1.25	67.5	93.0	32.307	200/400	15
		1800	324/6JP	050180T3E326JPV-W40	$5,190	P1C	566	1.25	58.5	94.5	32.307	230/460	15
		1800	324/6JP	050180T3V326JPV-W40	$5,190	P1C	611	1.25	67.3	94.5	32.307	200/400	15
60	45	3600	326JP	060360T3E326JPV*	$5,761	P1C	581	1.15	71.0	93.6	33.523	230/460	15
		3600	326JP	060360T3V326JPV*	$5,761	P1C	583	1.15	81.7	93.6	33.523	200/400	15
		3600	324/6JP	060360T3E326JPV-W40	$5,761	P1C	528	1.25	71.0	93.6	32.307	230/460	15
		3600	324/6JP	060360T3V326JPV-W40	$5,761	P1C	534	1.25	81.7	93.6	32.307	200/400	15
		1800	364/5JP	060180T3E364JPV-W40	$6,365	P1C	884	1.25	69.9	95.0	34.745	230/460	15
		1800	364/5JP	060180T3V364JPV-W40	$6,365	P1C	883	1.25	80.4	95.0	34.745	200/400	15
75	55	3600	364/5JP	075360T3E364JPV*	$8,121	P1C	880	1.15	83.4	93.6	35.208	230/460	15
		3600	364/5JP	075360T3E364JPV-W40	$8,121	P1C	823	1.25	84.8	93.6	34.745	230/460	15
		3600	364/5JP	075360T3H364JPV-W40	$8,121	P1C	818	1.25	67.8	93.6	34.745	575	15
		3600	364/5JP	075360T3V364JPV-W40	$8,121	P1C	822	1.25	97.5	93.6	34.745	200/400	15
		1800	364/5JP	075180T3E365JPV-W40	$7,331	P1C	907	1.25	85.5	95.0	34.745	230/460	15
		1800	364/5JP	075180T3V365JPV-W40	$7,331	P1C	909	1.25	98.3	95.0	34.745	200/400	15
100	75	3600	364/5JP	100360T3E365JPV-W40	$8,609	P1C	875	1.25	116	93.6	34.745	230/460	15
		3600	364/5JP	100360T3H365JPV-W40	$8,609	P1C	870	1.25	92.8	93.6	34.745	575	15
		3600	364/5JP	100360T3V365JPV-W40	$8,609	P1C	875	1.25	133	93.6	34.745	200/400	15
		1800	404/5JP	100180T3E404JPV-W40	$9,237	P1C	1059	1.25	115	95.4	37.747	230/460	15
		1800	404/5JP	100180T3V404JPV-W40	$9,237	P1C	1059	1.25	132	95.4	37.747	200/400	15

** To be discontinued and replaced by W40 model once inventory is depleted.*

CLOSE-COUPLED PUMP TEFC MOTORS - WITH INTERNAL AEGIS® SGR

JM - TEFC - Three Phase

HP	kW	RPM	Frame	Catalog Number	List Price	Mult. Symbol	Approx. Shipping Weight (lbs)	Service Factor	FL Amps @ High	FL. Eff (%)	"C" Dimension (in)	Voltage (V)	Notes
1	0.75	1800	143/5JM	00118ET3E143JM-SG	$764	P1S	45	1.15	1.50	85.5	16.102	230/460	9;34
		1800	143/5JM	00118ET3H143JM-SG	$764	P1S	45	1.15	1.20	85.5	16.102	575	9;34
		1800	143/5JM	00118ET3E143JM-W22G	$753	P1	55	1.25	1.47	85.5	15.675	230/460	34
1.5	1.1	3600	143/5JM	00156ET3E143JM-SG	$850	P1S	41	1.15	1.90	84.0	15.709	230/460	9;34
		3600	143/5JM	00156ET3H143JM-SG	$850	P1S	41	1.15	1.50	84.0	15.709	575	9;34,51
		1800	143/5JM	00158ET3E145JM-SG	$793	P1S	47	1.15	2.00	86.5	16.102	230/460	9;34
		1800	143/5JM	00158ET3H145JM-SG	$793	P1S	47	1.15	1.60	86.5	16.102	575	9;34
		1800	143/5JM	00158ET3E145JM-W22G	$783	P1	61	1.25	2.02	86.5	15.675	230/460	34
2	1.5	3600	143/5JM	00236ET3E145JM-SG	$834	P1S	47	1.15	2.50	85.5	16.496	230/460	9;34
		3600	143/5JM	00236ET3H145JM-SG	$834	P1S	47	1.15	2.00	85.5	16.496	575	9;34,51
		1800	143/5JM	00218ET3E145JM-SG	$858	P1S	50	1.15	2.70	86.5	16.496	230/460	9;34
		1800	143/5JM	00218ET3H145JM-SG	$858	P1S	50	1.15	2.20	86.5	16.496	575	9;34
		1800	143/5JM	00218ET3E145JM-W22G	$847	P1	62	1.25	2.76	86.5	15.675	230/460	34
3	2.2	3600	182/4JM	00336ET3E182JM-SG	$1,103	P1S	70	1.15	3.70	86.5	17.048	230/460	9;34
		3600	182/4JM	00336ET3H182JM-SG	$1,103	P1S	70	1.15	2.90	86.5	17.048	575	9;34
		1800	182/4JM	00318ET3E182JM-SG	$1,211	P1S	87	1.15	3.80	89.5	19.409	230/460	9;34
		1800	182/4JM	00318ET3H182JM-SG	$1,211	P1S	101	1.15	3.10	89.5	19.409	575	9;34
		1800	182/4JM	00318ET3E182JM-W22G	$1,192	P1	97	1.25	3.91	89.5	17.411	230/460	34
5	3.7	3600	182/4JM	00536ET3E184JM-SG	$1,264	P1S	90	1.15	5.90	88.5	18.228	230/460	9;34
		3600	182/4JM	00536ET3H184JM-SG	$1,264	P1S	90	1.15	4.70	88.5	18.228	575	9;34
		1800	182/4JM	00518ET3E184JM-SG	$1,331	P1S	94	1.15	6.50	89.5	19.409	230/460	9;34
		1800	182/4JM	00518ET3H184JM-SG	$1,331	P1S	94	1.15	5.20	89.5	19.409	575	9;34
		1800	182/4JM	00518ET3E184JM-W22G	$1,311	P1	106	1.25	6.45	89.5	17.411	230/460	34
7.5	5.5	3600	213/5JM	00736ET3E213JM-SG	$1,645	P1S	134	1.15	8.70	89.5	20.039	230/460	9;34
		3600	213/5JM	00736ET3H213JM-SG	$1,645	P1S	134	1.15	6.90	89.5	20.039	575	9;34,51
		1800	213/5JM	00718ET3E213JM-SG	$1,743	P1S	139	1.15	9.10	91.7	20.039	230/460	9;34
		1800	213/5JM	00718ET3H213JM-SG	$1,743	P1S	139	1.15	7.30	91.7	20.039	575	9;34
		1800	213/5JM	00718ET3E213JM-W22G	$1,719	P1	180	1.25	9.18	91.7	20.392	230/460	34
10	7.5	3600	213/5JM	01036ET3E215JM-SG	$2,001	P1S	164	1.15	11.5	90.2	21.220	230/460	9;34
		3600	213/5JM	01036ET3H215JM-SG	$2,001	P1S	164	1.15	9.20	90.2	21.220	575	9;34
		1800	213/5JM	01018ET3E215JM-SG	$2,023	P1S	151	1.15	12.2	91.7	20.433	230/460	9;34
		1800	213/5JM	01018ET3H215JM-SG	$2,023	P1S	151	1.15	9.80	91.7	20.433	575	9;34
		1800	213/5JM	01018ET3E215JM-W22G	$1,992	P1	193	1.25	12.4	91.7	20.392	230/460	34
15	11	3600	213/5JM	01536ET3E215JM-SG	$2,258	P1S	171	1.15	17.0	91.0	22.795	230/460	9;34
		3600	213/5JM	01536ET3H215JM-SG	$2,258	P1S	154	1.15	13.6	91.0	22.795	575	9;34
		3600	254/6JM	01536ET3E254JM-SG	$2,909	P1S	216	1.15	17.4	91.0	24.055	230/460	9;34
		3600	254/6JM	01536ET3H254JM-SG	$2,909	P1S	216	1.15	13.9	91.0	24.055	575	9;34
		1800	254/6JM	01518ET3E254JM-SG	$2,933	P1S	249	1.15	18.2	92.4	24.055	230/460	9;34
		1800	254/6JM	01518ET3H254JM-SG	$2,933	P1S	249	1.15	14.6	92.4	24.055	575	9;34
		1800	254/6JM	01518ET3E254JM-W22G	$2,889	P1	350	1.25	18	92.4	26.226	230/460	34
20	15	3600	254/6JM	02036ET3E256JM-SG	$3,298	P1S	257	1.15	22.7	91.0	24.843	230/460	9;34
		3600	254/6JM	02036ET3H256JM-SG	$3,298	P1S	257	1.15	18.2	91.0	24.843	575	9;34,51
		1800	254/6JM	02018ET3E256JM-SG	$3,188	P1S	279	1.15	24.7	92.4	24.843	230/460	9;34
		1800	254/6JM	02018ET3H256JM-SG	$3,188	P1S	279	1.15	19.8	93.0	24.843	575	9;34
		1800	254/6JM	02018ET3E256JM-W22G	$3,137	P1	399	1.25	24.1	93	26.226	230/460	34
25	18.5	1800	284/6JM	02518ET3E284JM-W22G	$4,045	P1	452	1.25	29.5	93.6	28.7	230/460	34
30	22	1800	284/6JM	03018ET3E286JM-W22G	$4,407	P1	490	1.25	35.1	93.6	28.7	230/460	34

Please refer to inside back cover for description of "NOTES"

For detailed specifications, data sheets, drawings and performance curves visit http://www.weg.net

CLOSE-COUPLED PUMP TEFC MOTORS - WITH INTERNAL AEGIS® SGR

JP - TEFC - Three Phase

HP	kW	RPM	Frame	Catalog Number	List Price	Mult. Symbol	Approx. Shipping Weight (lbs)	Service Factor	FL Amps @ High	FL. Eff (%)	"C" Dimension (in)	Voltage (V)	Notes
1	0.75	1800	143/5JP	00118ET3E143JP-SG	$764	P1S	50	1.15	1.50	85.5	19.173	230/460	9;34
1.5	1.1	3600	143/5JP	00156ET3E143JP-SG	$850	P1S	46	1.15	1.90	84.0	18.780	230/460	9;34
		1800	143/5JP	00158ET3E145JP-SG	$793	P1S	52	1.15	2.00	86.5	19.173	230/460	9;34
2	1.5	3600	143/5JP	00236ET3E145JP-SG	$834	P1S	52	1.15	2.50	85.5	19.567	230/460	9;34
		1800	143/5JP	00218ET3E145JP-SG	$858	P1S	55	1.15	2.70	86.5	19.567	230/460	9;34
3	2.2	3600	182/4JP	00336ET3E182JP-SG	$1,103	P1S	63	1.15	3.70	86.5	20.906	230/460	9;34
		1800	182/4JP	00318ET3E182JP-SG	$1,211	P1S	87	1.15	3.80	89.5	22.480	230/460	9;34
5	3.7	3600	182/4JP	00536ET3E184JP-SG	$1,264	P1S	79	1.15	5.90	88.5	22.480	230/460	9;34
		1800	182/4JP	00518ET3E184JP-SG	$1,331	P1S	105	1.15	6.50	89.5	22.480	230/460	9;34
7.5	5.5	3600	213/5JP	00736ET3E213JP-SG	$1,645	P1S	137	1.15	8.70	89.5	23.898	230/460	9;34
		1800	213/5JP	00718ET3E213JP-SG	$1,743	P1S	148	1.15	9.10	91.7	23.898	230/460	9;34
		1800	213/5JP	00718ET3H213JP-SG	$1,743	P1S	148	1.15	7.30	91.7	23.898	575	9;34
10	7.5	3600	213/5JP	01036ET3E215JP-SG	$2,001	P1S	162	1.15	11.5	90.2	25.079	230/460	9;34
		1800	213/5JP	01018ET3E215JP-SG	$2,023	P1S	160	1.15	12.2	91.7	24.291	230/460	9;34
		1800	213/5JP	01018ET3H215JP-SG	$2,023	P1S	160	1.15	9.80	91.7	24.291	575	9;34
15	11	3600	254/6JP	01536ET3E254JP-SG	$2,909	P1S	217	1.15	17.4	91.0	26.929	230/460	9;34
		1800	254/6JP	01518ET3E254JP-SG	$2,933	P1S	251	1.15	18.2	92.4	26.929	230/460	9;34
20	15	3600	254/6JP	02036ET3E256JP-SG	$3,298	P1S	258	1.15	22.7	91.0	27.717	230/460	9;34
		1800	254/6JP	02018ET3E256JP-SG	$3,188	P1S	281	1.15	24.7	93.0	27.717	230/460	9;34
50	37	1800	324/6JP	05018ET3E326JP-W22G	$7,024	P1	476	1.25	59.2	94.5	34.021	230/460	34;51

Please refer to inside back cover for description of "NOTES"

For detailed specifications, data sheets, drawings and performance curves visit http://www.weg.net

Data subject to change without notice.

CLOSE-COUPLED PUMP ODP MOTORS - WITH INTERNAL AEGIS® SGR

JM - ODP - Three Phase

HP	kW	RPM	Frame	Catalog Number	List Price	Mult. Symbol	Approx. Shipping Weight (lbs)	Service Factor	FL Amps @ High	FL. Eff (%)	"C" Dimension (in)	Voltage (V)	Notes
1	0.75	1800	143/5JM	001180T3E143JM-SG	$626	P1S	40	1.15	1.50	85.5	13.701	230/460	9;34
		1800	143/5JM	001180T3H143JM-SG	$626	P1S	40	1.15	1.20	85.5	13.701	575	9;34
1.5	1.1	3600	143/5JM	001560T3E143JM-SG	$674	P1S	33	1.15	1.90	84.0	13.701	230/460	9;34
		3600	143/5JM	001560T3H143JM-SG	$674	P1S	33	1.15	1.50	84.0	13.701	575	9;34,51
		1800	143/5JM	001580T3E145JM-SG	$693	P1S	47	1.15	2.10	86.5	14.882	230/460	9;34
		1800	143/5JM	001580T3H145JM-SG	$693	P1S	47	1.15	1.70	86.5	14.882	575	9;34
2	1.5	3600	143/5JM	002360T3E145JM-SG	$720	P1S	40	1.15	2.40	85.5	14.094	230/460	9;34,51
		3600	143/5JM	002360T3H145JM-SG	$720	P1S	40	1.15	1.90	85.5	14.094	575	9;34
		3600	143/5JM	002360T3V145JM-SG	$720	P1S	40	1.15	2.80	85.5	14.094	200/400	9;34
		1800	143/5JM	002180T3E145JM-SG	$747	P1S	44	1.15	2.70	86.5	14.882	230/460	9;34
		1800	143/5JM	002180T3H145JM-SG	$747	P1S	44	1.15	2.20	86.5	14.882	575	9;34
3	2.2	3600	143/5JM	003360T3E145JM-SG	$800	P1S	43	1.15	3.60	85.5	14.488	230/460	9;34
		3600	143/5JM	003360T3H145JM-SG	$800	P1S	43	1.15	2.90	85.5	14.488	575	9;34
		3600	143/5JM	003360T3V145JM-SG	$800	P1S	43	1.15	4.10	85.5	14.488	200/400	9;34
		1800	182/4JM	003180T3E182JM-SG	$835	P1S	85	1.15	3.90	89.5	16.654	230/460	9;34
		1800	182/4JM	003180T3H182JM-SG	$835	P1S	85	1.15	3.10	89.5	16.654	575	9;34
		1800	182/4JM	003180T3V182JM-SG	$835	P1S	85	1.15	4.40	89.5	16.654	200/400	9;34
5	3.7	3600	182/4JM	005360T3E182JM-SG	$962	P1S	59	1.15	6.10	86.5	15.472	230/460	9;34
		3600	182/4JM	005360T3H182JM-SG	$962	P1S	59	1.15	4.90	86.5	16.260	575	9;34
		3600	182/4JM	005360T3V182JM-SG	$962	P1S	59	1.15	7.00	86.5	15.472	200/400	9;34
		1800	182/4JM	005180T3E184JM-SG	$1,019	P1S	96	1.15	6.30	89.5	17.835	230/460	9;34
		1800	182/4JM	005180T3H184JM-SG	$1,019	P1S	96	1.15	5.10	89.5	17.835	575	9;34
7.5	5.5	3600	182/4JM	007360T3E184JM-SG	$1,256	P1S	77	1.15	8.70	88.5	16.26	230/460	9;34
		3600	182/4JM	007360T3H184JM-SG	$1,256	P1S	70	1.15	6.90	88.5	16.654	575	9;34
		1800	213/5JM	007180T3E213JM-SG	$1,320	P1S	135	1.15	9.30	91.0	17.717	230/460	9;34
		1800	213/5JM	007180T3H213JM-SG	$1,320	P1S	135	1.15	7.40	91.0	17.717	575	9;34
10	7.5	3600	213/5JM	010360T3E213JM-SG	$1,489	P1S	129	1.15	12.0	89.5	17.717	230/460	9;34
		3600	213/5JM	010360T3H213JM-SG	$1,489	P1S	125	1.15	9.60	89.5	17.717	575	9;34
		1800	213/5JM	010180T3E215JM-SG	$1,566	P1S	140	1.15	12.4	91.7	17.717	230/460	9;34
		1800	213/5JM	010180T3H215JM-SG	$1,566	P1S	140	1.15	9.90	91.7	17.717	575	9;34
15	11	3600	213/5JM	015360T3E215JM-SG	$1,907	P1S	151	1.15	17.2	90.2	18.898	230/460	9;34
		3600	213/5JM	015360T3H215JM-SG	$1,907	P1S	151	1.15	13.8	90.2	18.898	575	9;34
		1800	254/6JM	015180T3E254JM-SG	$2,275	P1S	226	1.15	18.6	93.0	21.969	230/460	9;34
		1800	254/6JM	015180T3H254JM-SG	$2,275	P1S	226	1.15	14.9	93.0	21.969	575	9;34
20	15	3600	254/6JM	020360T3E254JM-SG	$2,387	P1S	202	1.15	23.8	91.0	21.969	230/460	9;34
		3600	254/6JM	020360T3H254JM-SG	$2,387	P1S	202	1.15	19.0	91.0	21.969	575	9;34
		1800	254/6JM	020180T3E256JM-SG	$2,693	P1S	250	1.15	25.0	93.0	21.969	230/460	9;34
		1800	254/6JM	020180T3H256JM-SG	$2,693	P1S	250	1.15	20.0	93.0	21.969	575	9;34
25	18.5	3600	254/6JM	025360T3E256JM-SG	$2,879	P1S	225	1.15	29.1	91.7	21.969	230/460	9;34
		3600	254/6JM	025360T3H256JM-SG	$2,879	P1S	225	1.15	23.3	91.7	21.969	575	9;34;51

Please refer to inside back cover for description of "NOTES"

For detailed specifications, data sheets, drawings and performance curves visit http://www.weg.net

Pump Motors

CLOSE-COUPLED PUMP ODP MOTORS - WITH INTERNAL AEGIS® SGR

JP - ODP - Three Phase

HP	kW	RPM	Frame	Catalog Number	List Price	Mult. Symbol	Approx. Shipping Weight (lbs)	Service Factor	FL Amps @ High	FL. Eff (%)	"C" Dimension (in)	Voltage (V)	Notes
1	0.75	1800	143/5JP	00118OT3E143JP-SG	$626	P1S	40	1.15	1.50	85.5	16.772	230/460	9;34
1.5	1.1	3600	143/5JP	00156OT3E143JP-SG	$674	P1S	35	1.15	1.90	84.0	16.772	230/460	9;34
		1800	143/5JP	00158OT3E145JP-SG	$693	P1S	47	1.15	2.10	86.5	17.953	230/460	9;34
2	1.5	3600	143/5JP	00236OT3E145JP-SG	$720	P1S	42	1.15	2.40	85.5	17.165	230/460	9;34
		1800	143/5JP	00218OT3E145JP-SG	$747	P1S	45	1.15	2.70	86.5	17.953	230/460	9;34
3	2.2	3600	143/5JP	00336OT3E145JP-SG	$800	P1S	45	1.15	3.60	85.5	17.559	230/460	9;34
		1800	182/4JP	00318OT3E182JP-SG	$835	P1S	85	1.15	3.90	89.5	19.724	230/460	9;34
5	3.7	3600	182/4JP	00536OT3E182JP-SG	$962	P1S	59	1.15	6.10	86.5	19.331	230/460	9;34
		1800	182/4JP	00518OT3E184JP-SG	$1,019	P1S	99	1.15	6.30	89.5	20.906	230/460	9;34
7.5	5.5	3600	182/4JP	00736OT3E184JP-SG	$1,256	P1S	70	1.15	8.70	88.5	19.724	230/460	9;34
		1800	213/5JP	00718OT3E213JP-SG	$1,320	P1S	144	1.15	9.30	91.0	21.575	230/460	9;34
		1800	213/5JP	00718OT3H213JP-SG	$1,320	P1S	144	1.15	7.40	91.0	21.575	575	9;34
		1800	213/5JP	00718OT3V213JP-SG	$1,320	P1S	144	1.15	10.6	91.0	21.575	200/400	9;34
10	7.5	3600	213/5JP	01036OT3E213JP-SG	$1,489	P1S	144	1.15	12.0	89.5	21.575	230/460	9;34
		3600	213/5JP	01036OT3H213JP-SG	$1,489	P1S	144	1.15	9.60	89.5	21.969	575	9;34
		1800	213/5JP	01018OT3E215JP-SG	$1,566	P1S	149	1.15	12.4	91.7	21.575	230/460	9;34
		1800	213/5JP	01018OT3H215JP-SG	$1,566	P1S	149	1.15	9.9	91.7	21.575	575	9;34
		1800	213/5JP	01018OT3V215JP-SG	$1,566	P1S	149	1.15	14.3	91.7	21.575	200/400	9;34
15	11	3600	213/5JP	01536OT3E215JP-SG	$1,907	P1S	160	1.15	17.2	90.2	22.756	230/460	9;34
		3600	213/5JP	01536OT3H215JP-SG	$1,907	P1S	160	1.15	13.8	90.2	22.756	575	9;34
		1800	254/6JP	01518OT3E254JP-SG	$2,275	P1S	228	1.15	18.6	93.0	24.843	230/460	9;34
20	15	3600	254/6JP	02036OT3E254JP-SG	$2,387	P1S	204	1.15	23.8	91.0	24.843	230/460	9;34
		1800	254/6JP	02018OT3E256JP-SG	$2,693	P1S	252	1.15	25.0	93.0	24.843	230/460	9;34
25	18.5	3600	254/6JP	02536OT3E256JP-SG	$2,879	P1S	218	1.15	29.1	91.7	24.843	230/460	9;34
		1800	284JP	02518OT3E284JP-G	$3,221	P1C	392	1.15	29.9	93.6	27.141	230/460	34

Please refer to inside back cover for description of "NOTES"

For detailed specifications, data sheets, drawings and performance curves visit http://www.weg.net

Data subject to change without notice.

Pump Motors

In-Line Thrust

The In Line Extra Thrust motors have high capacity to withstand axial loads (in both directions), complying with the strict requirements of the American standard API 610

Standard Features:

- Run-out according to API 610,
- Concentricity according to API 610
- Perpendicularity according to API 610
- Axial clearance according to API 610
- Flange and shaft type LP
- Vertical mounting
- Supplied with drip cover to prevent the ingress of small objects through the fan cover/fan
- INPRO SEAL
- NEMA PREMIUM EFFICIENCY
- DESIGN B

HP	kW	RPM	Frame	Catalog Number	List Price	Multi. Symbol	Approx. Shipping Weight (lbs)	Service Factor	FL Amps @ High	FL. Eff (%)	"C" Dimension (in)	Voltage (V)	Notes
3	2.2	3600	182LP	00336ET3Q182LP-W21	$3,484	P1F	100	1.15	2.76	86.5	20.906	460	51
3	2.2	1800	184LP	00318ET3Q184LP-W21	$3,484	P1F	160	1.15	4	89.5	21.89	460	51
5	3.7	3600	184LP	00536ET3Q184LP-W21	$3,782	P1F	160	1.15	6.1	88.5	21.89	460	51
5	3.7	1800	184LP	00518ET3Q184LP-W21	$3,699	P1F	160	1.15	7.2	89.5	21.89	460	37;51
7.5	5.5	3600	213LP	00736ET3Q213LP-W21	$4,348	P1F	250	1.15	8.7	89.5	23.583	460	51
7.5	5.5	1800	213LP	00718ET3Q213LP-W21	$4,348	P1F	275	1.15	9.3	91.7	23.583	460	51
10	7.5	3600	215LP	01036ET3Q215LP-W21	$4,823	P1F	260	1.15	12	90.2	25.079	460	51
10	7.5	1800	L215LP	01018ET3Q215LP-W21	$5,000	P1F	275	1.15	12.5	91.7	26.26	460	51
15	11	3600	254LP	01536ET3Q254LP-W21	$5,766	P1F	360	1.15	17.4	91	29.016	460	51
15	11	1800	254LP	01518ET3Q254LP-W21	$5,790	P1F	380	1.15	18	92.4	29.016	460	51
20	15	3600	256LP	02036ET3Q256LP-W21	$6,423	P1F	370	1.15	23.5	91	30.748	460	51
20	15	1800	256LP	02018ET3Q256LP-W21	$6,600	P1F	420	1.15	26.6	93	30.748	460	37;51
25	18.5	3600	284LP	02536ET3Q284LP-W21	$6,992	P1F	500	1.15	28.5	91.7	32.126	460	51
25	18.5	1800	284LP	02518ET3Q284LP-W21	$7,185	P1F	500	1.15	31.4	93.6	32.126	460	37;51
30	22	3600	286LP	03036ET3Q286LP-W21	$8,029	P1F	525	1.15	33.8	91.7	33.622	460	51
30	22	1800	286LP	03018ET3Q286LP-W21	$8,190	P1F	560	1.15	35.5	93.6	33.622	460	37;51
40	30	3600	324LP	04036ET3Q324LP-W21	$9,810	P1F	670	1.15	46.8	92.4	35.512	460	51
40	30	1800	324LP	04018ET3Q324LP-W21	$9,920	P1F	730	1.15	47.1	94.1	35.512	460	37;51
50	37	3600	326LP	05036ET3Q326LP-W21	$10,931	P1F	700	1.15	57.4	93	37.008	460	51
50	37	1800	326LP	05018ET3Q326LP-W21	$11,480	P1F	740	1.10	61.4	94.5	37.008	460	37;51
60	45	3600	364/5LP	06036ET3Q364LP-W21	$15,314	P1F	1060	1.15	67.8	93.6	39.803	460	51
60	45	1800	364/5LP	06018ET3Q364LP-W21	$15,350	P1F	1150	1.15	69.9	95	39.803	460	37;51
75	55	3600	364/5LP	07536ET3Q365LP-W21	$15,532	P1F	1100	1.15	82.9	93.6	39.803	460	51
75	55	1800	364/5LP	07518ET3Q365LP-W21	$16,096	P1F	1150	1.15	86.1	95.4	39.804	460	37;51
100	75	3600	404/5LP	10036ET3Q404LP-W21	$19,839	P1F	1210	1.15	111	94.1	42.48	460	51
100	75	1800	404/5LP	10018ET3Q404LP-W21	$20,560	P1F	1300	1.10	120	95.4	42.48	460	37;51

Please refer to inside back cover for description of "NOTES"

For detailed specifications, data sheets, drawings and performance curves visit http://www.weg.net

Pump Motors

FIRE PUMP MOTORS

ODP and TEFC - Three Phase - High Efficiency

WEG Open Drip Proof motors are designed to meet demanding applications in environments where dirt and humidity are minimal, with W22 as an option for more demanding environments. These motors are specifically designed to provide maximum ventilation and cool operation.

ODP

Inverter Rated:
1000:1 for variable torque

Features that make a difference:

- Class F insulation (Impregnation Resin and Magnet wire are class H)
- Class B Rise at 1.15 Service Factor
- F1 Mounted (Cast Iron Frame motors are F2 convertible)
- Stainless Steel Nameplate - Laser etched with high contrast background (Cast Iron Frames only)
- Cast Iron Frames: Regreasable ball bearings (Frames 254T and up)
- Rolled Steel Frames: ZZ ball bearings (Permanently lubricated)
- UL Listed for Fire Pump service
- 12 leads on 200/400V and 230/460V available on all frames.

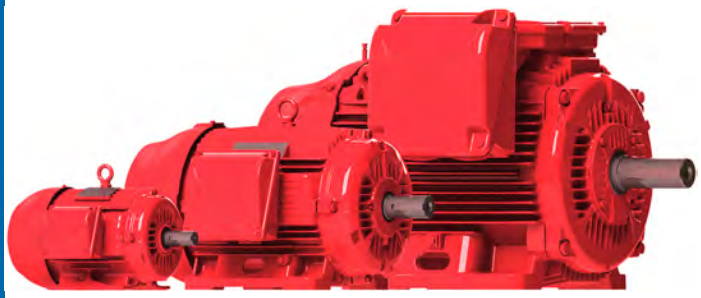

TEFC

ODP - Three Phase

HP	kW	RPM	Frame	Catalog Number	List Price	Mult. Symbol	Approx. Shipping Weight (lbs)	Service Factor	FL Amps @ High	FL. Eff (%)	"C" Dimension (in)	Voltage (V)	Notes
20	15	3600	254T	**02036OP3EFP254T-W40**	**$1,469**	W1B	229	1.15	24.3	90.2	20.537	230/460	30;49
		1800	254/6T	**02018OP3EFP256T-W40**	**$1,526**	W1B	229	1.15	24.6	91.0	22.285	230/460	30;49
25	18.5	3600	254/6T	**02536OP3EFP256T-S**	**$1,783**	W1S	192	1.15	29.0	91.0	20.472	230/460	9;30
		3600	254/6T	**02536OP3HFP256T-S**	**$1,783**	W1S	192	1.15	23.2	91.0	20.472	575	9;30
		3600	254/6T	**02536OP3VFP256T-S**	**$1,783**	W1S	192	1.15	33.3	91.0	20.472	200/400	9;30
		3600	254/6T	**02536OP3EFP256T-W40**	**$1,783**	W1B	224	1.15	29.7	91.0	22.285	230/460	30;49
		3600	254/6T	**02536OP3HFP256T-W40**	**$1,783**	W1B	223	1.15	23.8	91.0	22.285	575	30;49
		1800	284TS	**02518OP3EFP284TS-W40**	**$1,799**	W1B	395	1.15	30.1	91.7	21.783	230/460	30;49
		1800	284TS	**02518OP3VFP284TS-W40**	**$1,799**	W1B	395	1.15	34.6	91.7	21.783	200/400	30;49
30	22	3600	284TS	**03036OP3EFP284TS-W40**	**$2,033**	W1B	331	1.15	34.9	91.0	21.783	230/460	30;49
		3600	284TS	**03036OP3HFP284TS-W40**	**$2,033**	W1B	331	1.15	27.9	91.0	21.783	575	30;49
		3600	284TS	**03036OP3VFP284TS-W40**	**$2,033**	W1B	331	1.15	40.1	91.0	21.783	200/400	30;49
		1800	284/6TS	**03018OP3EFP286TS-W40**	**$2,108**	W1B	413	1.15	35.6	92.4	23.283	230/460	30;49
		1800	284/6TS	**03018OP3VFP286TS-W40**	**$2,108**	W1B	413	1.15	40.9	92.4	23.283	200/400	30;49
40	30	3600	284/6TS	**04036OP3EFP286TS-W40**	**$2,757**	W1B	365	1.15	47.2	91.7	23.283	230/460	30;49
		3600	284/6TS	**04036OP3HFP286TS-W40**	**$2,757**	W1B	364	1.15	37.8	91.7	23.283	575	30;49
		3600	284/6TS	**04036OP3VFP286TS-W40**	**$2,757**	W1B	365	1.15	54.3	91.7	23.283	200/400	30;49
		1800	324TS	**04018OP3EFP324TS-W40**	**$2,652**	W1B	467	1.15	48.2	93.0	24.307	230/460	30;49
		1800	324TS	**04018OP3HFP324TS-W40**	**$2,652**	W1B	466	1.15	38.6	93.0	24.307	575	30;49
		1800	324TS	**04018OP3VFP324TS-W40**	**$2,652**	W1B	468	1.15	55.4	93.0	24.307	200/400	30;49
50	37	3600	324TS	**05036OP3EFP324TS-W40**	**$3,184**	W1B	457	1.15	58.4	92.4	24.307	230/460	30;49
		3600	324TS	**05036OP3HFP324TS-W40**	**$3,184**	W1B	457	1.15	46.7	92.4	24.307	575	30;49
		3600	324TS	**05036OP3VFP324TS-W40**	**$3,184**	W1B	457	1.15	67.2	92.4	24.307	200/400	30;49
		3600	324TS	**05036OP3JFP324TS-W40**	**$3,184**	W1B	457	1.15	70.7	92.4	24.307	380	30;49
		1800	324/6TS	**05018OP3EFP326TS-W40**	**$3,015**	W1B	502	1.15	60.2	93.0	25.807	230/460	30;49
		1800	324/6TS	**05018OP3VFP326TS-W40**	**$3,015**	W1B	502	1.15	69.2	93.0	25.807	200/400	30;49
60	45	3600	326TS	**06036OP3VFP326TS***	**$4,008**	W1B	527	1.15	81.2	93.0	26.181	200/400	30;31;49
		3600	324/6TS	**06036OP3EFP326TS-W40**	**$4,008**	W1B	485	1.15	70.6	93.0	25.807	230/460	30;49
		3600	324/6TS	**06036OP3HFP326TS-W40**	**$4,008**	W1B	484	1.15	56.5	93.0	25.807	575	30;49
		3600	324/6TS	**06036OP3VFP326TS-W40**	**$4,008**	W1B	487	1.15	81.2	93.0	25.807	200/400	30;49
		3600	324/6TS	**06036OP3JFP326TS-W40**	**$4,008**	W1B	486	1.15	85.5	93.0	25.807	380	30;49
		1800	364/5TS	**06018OP3EFP364TS-W40**	**$3,703**	W1B	771	1.15	71.0	93.6	27.522	230/460	30;49
		1800	364/5TS	**06018OP3HFP364TS-W40**	**$3,703**	W1B	767	1.15	56.8	93.6	27.522	575	30;49
		1800	364/5TS	**06018OP3VFP364TS-W40**	**$3,703**	W1B	771	1.15	81.7	93.6	27.522	200/400	30;49
75	55	3600	364/5TS	**07536OP3EFP364TS-W40**	**$5,074**	W1B	771	1.15	85.3	93.0	27.522	230/460	30;49
		3600	364/5TS	**07536OP3HFP364TS-W40**	**$5,074**	W1B	769	1.15	68.2	93.0	27.522	575	30;49
		3600	364/5TS	**07536OP3VFP364TS-W40**	**$5,074**	W1B	773	1.15	98.1	93.0	27.522	200/400	30;49
		3600	364/5TS	**07536OP3JFP364TS-W40**	**$5,074**	W1B	771	1.15	103	93.0	27.522	380	30;49
		1800	364/5TS	**07518OP3EFP365TS-W40**	**$4,715**	W1B	852	1.15	85.3	94.1	27.522	230/460	30;49
		1800	364/5TS	**07518OP3HFP365TS-W40**	**$4,715**	W1B	848	1.15	68.2	94.1	27.522	575	30;49
		1800	364/5TS	**07518OP3VFP365TS-W40**	**$4,715**	W1B	851	1.15	98.1	94.1	27.522	200/400	30;49

continued on next page

ODP - Three Phase - *continued*

HP	kW	RPM	Frame	Catalog Number	List Price	Mult. Symbol	Approx. Shipping Weight (lbs)	Service Factor	FL Amps @ High	FL. Eff (%)	"C" Dimension (in)	Voltage (V)	Notes
100	75	3600	364/5TS	**100360P3EFP365TS-W40**	**$6,152**	W1B	842	1.15	115	93.0	27.522	230/460	30;50
		3600	364/5TS	**100360P3HFP365TS-W40**	**$6,152**	W1B	838	1.15	92.0	93.0	27.522	575	30;50
		3600	364/5TS	**100360P3VFP365TS-W40**	**$6,152**	W1B	842	1.15	132	93.0	27.522	200/400	30;50
		3600	364/5TS	**100360P3JFP365TS-W40**	**$6,152**	W1B	841	1.15	139	93.0	27.522	380	30;50
		1800	404/5TS	**100180P3EFP404TS-W40**	**$6,065**	W1B	930	1.15	116	94.1	31.100	230/460	30;49
		1800	404/5TS	**100180P3HFP404TS-W40**	**$6,065**	W1B	927	1.15	92.8	94.1	31.100	575	30;49
		1800	404/5TS	**100180P3VFP404TS-W40**	**$6,065**	W1B	928	1.15	133	94.1	31.100	200/400	30;49
		1800	404/5T	**100180P3EFP404T-W40**	**$6,065**	W1B	946	1.15	116	94.1	34.100	230/460	30;49
125	90	3600	404/5TS	**125360P3EFP404TS-W40**	**$7,762**	W1B	940	1.15	137	93.6	31.100	230/460	30
		3600	404/5TS	**125360P3GFP404TS-W40**	**$7,762**	W1B	934	1.15	137	93.6	31.100	460	30
		3600	404/5TS	**125360P3HFP404TS-W40**	**$7,762**	W1B	934	1.15	110	93.6	31.100	575	30
		3600	404/5TS	**125360P3VFP404TS-W40**	**$7,762**	W1B	934	1.15	158	93.6	31.100	200/400	30
		3600	404/5TS	**125360P3JFP404TS-W40**	**$7,762**	W1B	938	1.15	166	93.6	31.100	380	30
		1800	404/5TS	**125180P3EFP405TS-W40**	**$6,651**	W1B	1088	1.15	139	94.5	31.100	230/460	30;49
		1800	404/5TS	**125180P3GFP405TS-W40**	**$6,651**	W1B	1084	1.15	139	94.5	31.100	460	30;49
		1800	404/5TS	**125180P3HFP405TS-W40**	**$6,651**	W1B	1081	1.15	111	94.5	31.100	575	30;49
		1800	404/5TS	**125180P3VFP405TS-W40**	**$6,651**	W1B	1089	1.15	160	94.5	31.100	200/400	30;49
150	110	3600	404/5TS	**150360P3EFP405TS-W40**	**$10,042**	W1B	1042	1.15	164	93.6	31.100	230/460	30
		3600	404/5TS	**150360P3GFP405TS-W40**	**$10,042**	W1B	1040	1.15	164	93.6	31.100	460	30
		3600	404/5TS	**150360P3HFP405TS-W40**	**$10,042**	W1B	1038	1.15	131	93.6	31.100	575	30
		3600	404/5TS	**150360P3VFP405TS-W40**	**$10,042**	W1B	1038	1.15	188	93.6	31.100	200/400	30
		3600	404/5TS	**150360P3JFP405TS-W40**	**$10,042**	W1B	1042	1.15	199	93.6	31.100	380	30
		1800	444/5TS	**150180P3EFP444TS-W40**	**$8,891**	W1B	1426	1.15	169	95.0	34.358	230/460	30;49
		1800	444/5TS	**150180P3GFP444TS-W40**	**$8,891**	W1B	1424	1.15	169	95.0	34.358	460	30;49
		1800	444/5TS	**150180P3HFP444TS-W40**	**$8,891**	W1B	1422	1.15	135	95.0	34.358	575	30;49
200	150	3600	444/5TS	**200360P3GFP444TS-W40**	**$12,782**	W1B	1415	1.15	224	94.5	34.358	460	30;49
		3600	444/5TS	**200360P3HFP444TS-W40**	**$12,782**	W1B	1408	1.15	179	94.5	34.358	575	30;49
		3600	444/5TS	**200360P3JFP444TS-W40**	**$12,782**	W1B	1413	1.15	271	94.5	34.358	380	30;49
		1800	444/5TS	**200180P3GFP445TS-W40**	**$10,837**	W1B	1471	1.15	230	95.0	34.358	460	30;49
		1800	444/5TS	**200180P3HFP445TS-W40**	**$10,837**	W1B	1469	1.15	184	95.0	34.358	575	30;49
250	185	3600	444/5TS	**250360P3GFP445TS-W40**	**$15,654**	W1B	1472	1.15	282	94.5	34.358	460	30;50
		3600	444/5TS	**250360P3HFP445TS-W40**	**$15,654**	W1B	1515	1.15	226	94.5	34.358	575	30;50
		1800	444/5TS	**250180P3GFP445TS-W40**	**$13,358**	W1B	1618	1.15	283	95.4	34.358	460	30
		1800	444/5TS	**250180P3HFP445TS-W40**	**$13,358**	W1B	1617	1.15	226	95.4	34.358	575	30
300	220	3600	444/5TS	**300360P3GFP445TS-W40**	**$19,556**	W1B	1594	1.15	327	95.0	34.358	460	30;50
		3600	444/5TS	**300360P3HFP445TS-W40**	**$19,556**	W1B	1596	1.15	262	95.0	34.358	575	30;50
		1800	447/9TS	**300180P3GFP447/9TSW4**	**$19,168**	W1B	2055	1.15	336	95.5	42.959	460	30
350	260	3600	447/9TS	**350360P3GFP447/9TSW4**	**$22,346**	W1B	2100	1.15	386	95.0	42.959	460	30;49
		3600	447/9TS	**350360P3HFP447/9TSW4**	**$22,346**	W1B	2020	1.15	309	95.0	42.959	575	30;49
		1800	447/9TS	**350180P3GFP447/9TSW4**	**$22,807**	W1B	2239	1.15	393	95.5	42.959	460	30
		1800	447/9TS	**350180P3HFP447/9TSW4**	**$22,807**	W1B	2555	1.15	314	95.5	42.959	575	30
400	300	3600	447/9TS	**400360P3GFP447/9TSW4**	**$24,140**	W1B	2180	1.15	443	95.4	42.959	460	30;49
		3600	447/9TS	**400360P3HFP447/9TSW4**	**$24,140**	W1B	2103	1.15	354	95.4	42.959	575	30;49
		1800	447/9TS	**400180P3QFP447/9TSW4**	**$25,570**	W1B	2475	1.15	443	95.5	42.959	460	30
		1800	447/9TS	**400180P3HFP447/9TSW4**	**$25,570**	W1B	2695	1.15	354	95.5	42.959	575	30
450	330	3600	447/9TS	**450360P3GFP447/9TSW4**	**$26,055**	W1B	2306	1.15	480	95.8	42.959	460	30;50
		3600	447/9TS	**450360P3HFP447/9TSW4**	**$26,055**	W1B	2306	1.15	384	95.8	42.959	575	30;50
500	370	3600	447/9TS	**500360P3GFP447/9TSW4**	**$27,711**	W1B	2365	1.15	539	95.8	42.959	460	30;50
		3600	447/9TS	**500360P3HFP447/9TSW4**	**$27,711**	W1B	2365	1.15	431	95.8	42.959	575	30;50

** To be discontinued and replaced by W40 model once inventory is depleted.*

Please refer to inside back cover for description of "NOTES"

For detailed specifications, data sheets, drawings and performance curves visit http://www.weg.net

Data subject to change without notice.

ODP - Three Phase - C-Face

HP	kW	RPM	Frame	Catalog Number	List Price	Mult. Symbol	Approx. Shipping Weight (lbs)	Service Factor	FL Amps @ High	FL. Eff (%)	"C" Dimension (in)	Voltage (V)	Notes
7.5	5.5	3600	182/4TC	**00736OP3EFP184TC-S**	**$734**	W1S	63	1.15	8.90	87.5	14.764	230/460	9;30
		3600	182/4TC	**00736OP3HFP184TC-S**	**$734**	W1S	63	1.15	7.10	87.5	14.764	575	9;30
		3600	182/4TC	**00736OP3VFP184TC-S**	**$734**	W1S	63	1.15	10.2	87.5	14.764	200/400	9;30
10	7.5	3600	213/5TC	**01036OP3EFP213TC-S**	**$901**	W1S	121	1.15	12.2	88.5	16.575	230/460	9;30;31
		3600	213/5TC	**01036OP3HFP213TC-S**	**$901**	W1S	121	1.15	9.80	88.5	16.575	575	9;30
15	11	3600	213/5TC	**01536OP3EFP215TC-S**	**$1,283**	W1S	135	1.15	17.5	89.5	16.969	230/460	9;30;31
		3600	213/5TC	**01536OP3VFP215TC-S**	**$1,283**	W1S	135	1.15	20.1	89.5	16.969	200/400	9;30;31
20	15	3600	254/6TC	**02036OP3EFP254TC-S**	**$1,469**	W1S	202	1.15	23.7	90.2	20.472	230/460	9;30;31
		3600	254/6TC	**02036OP3HFP254TC-S**	**$1,469**	W1S	202	1.15	19.0	90.2	20.472	575	9;30
		3600	254/6TC	**02036OP3VFP254TC-S**	**$1,469**	W1S	202	1.15	27.3	90.2	20.472	200/400	9;30;31
		3600	254TC	**02036OP3EFP254TC-W40**	**$1,469**	W1B	235	1.15	24.3	90.2	21.037	230/460	30;49
		3600	254TC	**02036OP3HFP254TC-W40**	**$1,469**	W1B	235	1.15	19.4	90.2	21.037	575	30;49
		3600	254TC	**02036OP3VFP254TC-W40**	**$1,469**	W1B	235	1.15	28.0	90.2	21.037	200/400	30;49
25	18.5	3600	254/6TC	**02536OP3EFP256TC-S**	**$1,783**	W1S	207	1.15	29.0	91.0	20.472	230/460	9;30
		3600	254/6TC	**02536OP3VFP256TC-S**	**$1,783**	W1S	207	1.15	33.3	91.0	20.472	200/400	9;30;31
		3600	254/6TC	**02536OP3EFP256TC-W40**	**$1,783**	W1B	252	1.15	29.7	91.0	22.785	230/460	30;49
		3600	254/6TC	**02536OP3VFP256TC-W40**	**$1,783**	W1B	252	1.15	34.2	91.0	22.785	200/400	30;49
30	22	3600	284TSC	**03036OP3EFP284TSC-W4**	**$2,033**	W1B	339	1.15	34.9	91.0	21.783	230/460	30;49
		3600	284TSC	**03036OP3VFP284TSC-W4**	**$2,033**	W1B	338	1.15	40.1	91.0	21.783	200/400	30;49
40	30	3600	284/6TSC	**04036OP3EFP286TSC-W4**	**$2,757**	W1B	373	1.15	47.2	91.7	23.283	230/460	30;49
		3600	284/6TSC	**04036OP3HFP286TSC-W4**	**$2,757**	W1B	372	1.15	37.8	91.7	23.283	575	30;49
		3600	284/6TSC	**04036OP3VFP286TSC-W4**	**$2,757**	W1B	384	1.15	54.3	91.7	23.283	200/400	30;49
		1800	324TC	**04018OP3EFP324TC-W40**	**$2,752**	W1B	495	1.15	48.2	93.0	25.807	230/460	30;49
50	37	3600	324TSC	**05036OP3EFP324TSC-W4**	**$3,184**	W1B	473	1.15	58.4	92.4	24.307	230/460	30;49
		3600	324TSC	**05036OP3VFP324TSC-W4**	**$3,184**	W1B	491	1.15	67.2	92.4	24.307	200/400	30;49
		1800	324/6TC	**05018OP3EFP326TC-W40**	**$3,135**	W1B	519	1.15	60.2	93.0	27.307	230/460	30;49
60	45	3600	324/6TSC	**06036OP3EFP326TSC-W4**	**$4,448**	W1B	501	1.15	70.6	93.0	25.807	230/460	30;49
75	55	1800	364/5TC	**07518OP3EFP365TC-W40**	**$5,109**	W1B	835	1.15	85.3	94.1	29.725	230/460	30;49
100	75	1800	404/5TC	**10018OP3EFP404TC-W40**	**$6,510**	W1B	970	1.15	116	94.1	34.100	230/460	30;49
		1800	404/5TC	**10018OP3HFP404TC-W40**	**$6,510**	W1B	967	1.15	92.8	94.1	34.100	575	30;49
		1800	404/5TC	**10018OP3VFP404TC-W40**	**$6,510**	W1B	969	1.15	133	94.1	34.100	200/400	30;49
125	90	1800	404/5TC	**12518OP3GFP405TC-W40**	**$6,651**	W1B	1060	1.15	139	94.5	34.100	460	30;49
		1800	404/5TC	**12518OP3HFP405TC-W40**	**$6,651**	W1B	1060	1.15	111	94.5	34.100	575	30;49

Please refer to inside back cover for description of "NOTES"

For detailed specifications, data sheets, drawings and performance curves visit http://www.weg.net

FIRE PUMP MOTORS

ODP – Three-Phase – JM – Footless Vertical

HP	kW	RPM	Frame	Catalog Number	List Price	Mult. Symbol	Approx. Shipping Weight (lbs)	Service Factor	FL Amps @ High	FL. Eff (%)	"C" Dimension (in)	Voltage (V)	Notes
7.5	5.5	3600	182/4JM	**007360P3EFP184JMV-S**	**$993**	P1S	71	1.15	8.90	87.5	17.638	230/460	9;15;30
		3600	182/4JM	**007360P3HFP184JMV-S**	**$993**	P1S	71	1.15	7.10	87.5	17.638	575	9;15;30
		3600	182/4JM	**007360P3VFP184JMV-S**	**$993**	P1S	71	1.15	10.2	87.5	17.638	200/400	9;15;30
10	7.5	3600	213/5JM	**010360P3EFP213JMV-S**	**$1,201**	P1S	117	1.15	12.2	88.5	18.977	230/460	9;15;30
		3600	213/5JM	**010360P3HFP213JMV-S**	**$1,201**	P1S	117	1.15	9.80	88.5	18.977	575	9;15;30
		3600	213/5JM	**010360P3VFP213JMV-S**	**$1,201**	P1S	117	1.15	14.0	88.5	18.977	200/400	9;15;30
15	11	3600	213/5JM	**015360P3EFP215JMV-S**	**$1,617**	P1S	132	1.15	17.5	89.5	19.370	230/460	9;15;30
		3600	213/5JM	**015360P3HFP215JMV-S**	**$1,617**	P1S	132	1.15	14.0	89.5	19.370	575	9;15;30
		3600	213/5JM	**015360P3VFP215JMV-S**	**$1,617**	P1S	132	1.15	20.1	89.5	19.370	200/400	9;15;30
20	15	3600	254/6JM	**020360P3EFP254JMV-S**	**$2,092**	P1S	206	1.15	23.7	90.2	23.359	230/460	9;15;30
		3600	254/6JM	**020360P3HFP254JMV-S**	**$2,092**	P1S	206	1.15	19.0	90.2	23.359	575	9;15;30
		3600	254/6JM	**020360P3VFP254JMV-S**	**$2,092**	P1S	206	1.15	27.3	90.2	23.359	200/400	9;15;30
25	18.5	3600	254/6JM	**025360P3EFP256JMV-S**	**$2,352**	P1S	211	1.15	29.0	91.0	23.359	230/460	9;15;30
		3600	254/6JM	**025360P3HFP256JMV-S**	**$2,352**	P1S	211	1.15	23.2	91.0	23.359	575	9;15;30
		3600	254/6JM	**025360P3VFP256JMV-S**	**$2,352**	P1S	211	1.15	33.3	91.0	23.359	200/400	9;15;30
30	22	3600	284JM	**030360P3HFP284JMV***	**$3,181**	P1C	368	1.15	27.6	91.0	26.584	575	15;30;49
		3600	284/6JM	**030360P3EFP284JMV-W4**	**$2,954**	P1C	363	1.15	34.9	91.0	27.403	230/460	15;30;49
		3600	284/6JM	**030360P3HFP284JMV-W4**	**$3,181**	P1C	363	1.15	27.9	91.0	27.403	575	15;30;49
		3600	284/6JM	**030360P3VFP284JMV-W4**	**$2,954**	P1C	362	1.15	40.1	91.0	27.403	200/400	15;30;49
		1800	284/6JM	**030180P3EFP286JMV-W4**	**$3,175**	P1C	435	1.15	35.6	92.4	27.403	230/460	15;30;49
		1800	284/6JM	**030180P3HFP286JMV-W4**	**$3,403**	P1C	434	1.15	28.5	92.4	27.403	575	15;30;49
40	30	3600	284/6JM	**040360P3EFP286JMV-W4**	**$3,611**	P1C	387	1.15	47.2	91.7	27.403	230/460	15;30;49
		3600	284/6JM	**040360P3HFP286JMV-W4**	**$3,611**	P1C	386	1.15	37.8	91.7	27.403	575	15;30;49
		3600	284/6JM	**040360P3VFP286JMV-W4**	**$3,611**	P1C	387	1.15	54.3	91.7	27.403	200/400	15;30;49
		1800	324/6JM	**040180P3EFP324JMV-W4**	**$3,621**	P1C	502	1.15	48.2	93.0	29.427	230/460	15;30;49
		1800	324/6JM	**040180P3HFP324JMV-W4**	**$3,621**	P1C	501	1.15	38.6	93.0	29.427	575	15;30;49
50	37	3600	324JM	**050360P3HFP324JMV***	**$4,394**	P1C	500	1.15	46.7	92.4	29.147	575	15;30;49
		3600	324/6JM	**050360P3EFP324JMV-W4**	**$4,394**	P1C	492	1.15	58.4	92.4	29.427	230/460	15;30;49
		3600	324/6JM	**050360P3HFP324JMV-W4**	**$4,394**	P1C	492	1.15	46.7	92.4	29.427	575	15;30;49
		3600	324/6JM	**050360P3VFP324JMV-W4**	**$4,664**	P1C	492	1.15	67.2	92.4	29.427	200/400	15;30;49
		1800	324/6JM	**050180P3EFP326JMV-W4**	**$4,393**	P1C	525	1.15	60.2	93.0	29.427	230/460	15;30;49
		1800	324/6JM	**050180P3HFP326JMV-W4**	**$4,527**	P1C	523	1.15	48.2	93.0	29.427	575	15;30;49
60	45	3600	326JM	**060360P3HFP326JMV***	**$5,305**	P1C	555	1.15	56.5	93.0	30.643	575	15;30;49
		3600	324/6JM	**060360P3EFP326JMV-W4**	**$5,171**	P1C	508	1.15	70.6	93.0	29.427	230/460	15;30;49
		3600	324/6JM	**060360P3HFP326JMV-W4**	**$5,305**	P1C	507	1.15	56.5	93.0	29.427	575	15;30;49
		3600	324/6JM	**060360P3VFP326JMV-W4**	**$5,171**	P1C	510	1.15	81.2	93.0	29.427	200/400	15;30;49

** To be discontinued and replaced by W40 model once inventory is depleted.*

Please refer to inside back cover for description of "NOTES"

For detailed specifications, data sheets, drawings and performance curves visit http://www.weg.net

Data subject to change without notice.

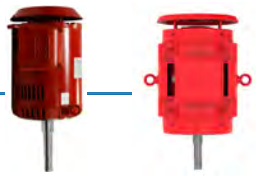

ODP – Three-Phase – JP – Footless Vertical

HP	kW	RPM	Frame	Catalog Number	List Price	Mult. Symbol	Approx. Shipping Weight (lbs)	Service Factor	FL Amps @ High	FL. Eff (%)	"C" Dimension (in)	Voltage (V)	Notes
7.5	5.5	3600	182/4JP	**007360P3EFP184JPV-S**	**$993**	P1S	72	1.15	8.90	87.5	20.709	230/460	9;15;30
		3600	182/4JP	**007360P3HFP184JPV-S**	**$993**	P1S	72	1.15	7.10	87.5	20.709	575	9;15;30
		3600	182/4JP	**007360P3VFP184JPV-S**	**$993**	P1S	72	1.15	10.2	87.5	20.709	200/400	9;15;30
		1800	213/5JP	**007180P3EFP213JPV-S**	**$1,028**	P1S	127	1.15	9.30	88.5	22.835	230/460	9;15;30
		1800	213/5JP	**007180P3HFP213JPV-S**	**$1,028**	P1S	127	1.15	7.40	88.5	22.835	575	9;15;30
10	7.5	3600	213/5JP	**010360P3EFP213JPV-S**	**$1,273**	P1S	130	1.15	12.2	88.5	22.835	230/460	9;15;30
		3600	213/5JP	**010360P3HFP213JPV-S**	**$1,273**	P1S	130	1.15	9.80	88.5	22.835	575	9;15;30
		3600	213/5JP	**010360P3VFP213JPV-S**	**$1,273**	P1S	130	1.15	14.0	88.5	22.835	200/400	9;15;30
		1800	213/5JP	**010180P3EFP215JPV-S**	**$1,245**	P1S	142	1.15	12.4	89.5	22.835	230/460	9;15;30
15	11	3600	213/5JP	**015360P3EFP215JPV-S**	**$1,617**	P1S	144	1.15	17.5	89.5	23.229	230/460	9;15;30
		3600	213/5JP	**015360P3HFP215JPV-S**	**$1,617**	P1S	144	1.15	14.0	89.5	23.229	575	9;15;30
		3600	213/5JP	**015360P3VFP215JPV-S**	**$1,617**	P1S	144	1.15	20.1	89.5	23.229	200/400	9;15;30
		1800	254/6JP	**015180P3EFP254JPV-S**	**$1,847**	P1S	203	1.15	18.5	91.0	26.233	230/460	9;15;30
		1800	254/6JP	**015180P3VFP254JPV-S**	**$1,847**	P1S	203	1.15	21.3	91.0	26.233	200/400	9;15;30
20	15	3600	254/6JP	**020360P3EFP254JPV-S**	**$2,092**	P1S	209	1.15	23.7	90.2	26.233	230/460	9;15;30
		3600	254/6JP	**020360P3HFP254JPV-S**	**$2,092**	P1S	209	1.15	19.0	90.2	26.233	575	9;15;30
		3600	254/6JP	**020360P3VFP254JPV-S**	**$2,092**	P1S	209	1.15	27.3	90.2	26.233	200/400	9;15;30
		1800	254/6JP	**020180P3EFP256JPV-S**	**$2,205**	P1S	219	1.15	25.5	91.0	26.233	230/460	9;15;30
25	18.5	3600	254/6JP	**025360P3EFP256JPV-S**	**$2,518**	P1S	214	1.15	29.0	91.0	26.233	230/460	9;15;30
		3600	254/6JP	**025360P3HFP256JPV-S**	**$2,518**	P1S	214	1.15	23.2	91.0	26.233	575	9;15;30
		3600	254/6JP	**025360P3VFP256JPV-S**	**$2,518**	P1S	214	1.15	33.3	91.0	26.233	200/400	9;15;30
		1800	284/6JP	**025180P3EFP284JPV-W4**	**$2,768**	P1C	428	1.15	30.1	91.7	30.283	230/460	15;30;49
30	22	3600	284JP	**030360P3EFP284JPV***	**$3,082**	P1C	372	1.15	34.5	91.0	29.464	230/460	15;30;49
		3600	284JP	**030360P3VFP284JPV***	**$3,082**	P1C	372	1.15	39.7	91.0	29.464	200/400	15;30;49
		3600	284/6JP	**030360P3EFP284JPV-W4**	**$3,082**	P1C	365	1.15	34.9	91.0	30.283	230/460	15;30;49
		3600	284/6JP	**030360P3HFP284JPV-W4**	**$3,181**	P1C	364	1.15	27.9	91.0	30.283	575	15;30;49
		3600	284/6JP	**030360P3VFP284JPV-W4**	**$3,082**	P1C	364	1.15	40.1	91.0	30.283	200/400	15;30;49
		1800	284/6JP	**030180P3EFP286JPV-W4**	**$3,224**	P1C	437	1.15	35.6	92.4	30.283	230/460	15;30;49
		1800	284/6JP	**030180P3VFP286JPV-W4**	**$3,174**	P1C	437	1.15	40.9	92.4	30.283	200/400	15;30;49
40	30	3600	286JP	**040360P3EFP286JPV***	**$3,611**	P1C	416	1.15	46.1	91.7	30.957	230/460	15;30;49
		3600	286JP	**040360P3VFP286JPV***	**$3,611**	P1C	416	1.15	53.0	91.7	30.957	200/400	15;30;49
		3600	284/6JP	**040360P3EFP286JPV-W4**	**$3,611**	P1C	389	1.15	47.2	91.7	30.283	230/460	15;30;49
		3600	284/6JP	**040360P3HFP286JPV-W4**	**$3,499**	P1C	388	1.15	37.8	91.7	30.283	575	15;30;49
		3600	284/6JP	**040360P3VFP286JPV-W4**	**$3,611**	P1C	389	1.15	54.3	91.7	30.283	200/400	15;30;49
		1800	324JP	**040180P3VFP324JPV***	**$3,987**	P1C	509	1.15	56.8	93.0	32.027	200/400	15;30;49
		1800	324/6JP	**040180P3EFP324JPV-W4**	**$3,987**	P1C	504	1.15	48.2	93.0	32.307	230/460	15;30;49
		1800	324/6JP	**040180P3HFP324JPV-W4**	**$3,621**	P1C	502	1.15	38.6	93.0	32.307	575	15;30;49
		1800	324/6JP	**040180P3VFP324JPV-W4**	**$3,987**	P1C	504	1.15	55.4	93.0	32.307	200/400	15;30;49

continued on next page

Please refer to inside back cover for description of "NOTES"

For detailed specifications, data sheets, drawings and performance curves visit http://www.weg.net

FIRE PUMP MOTORS

ODP – Three-Phase – JP – Footless Vertical - *continued*

HP	kW	RPM	Frame	Catalog Number	List Price	Mult. Symbol	Approx. Shipping Weight (lbs)	Service Factor	FL Amps @ High	FL. Eff (%)	"C" Dimension (in)	Voltage (V)	Notes
50	37	3600	324JP	**050360P3EFP324JPV***	**$4,372**	P1C	503	1.15	58.4	92.4	32.027	230/460	15;30;49
		3600	324JP	**050360P3HFP324JPV***	**$4,372**	P1C	506	1.15	46.7	92.4	32.027	575	15;30;49
		3600	324JP	**050360P3VFP324JPV***	**$4,372**	P1C	504	1.15	67.2	92.4	32.027	200/400	15;30;49
		3600	324/6JP	**050360P3EFP324JPV-W4**	**$4,372**	P1C	494	1.15	58.4	92.4	32.307	230/460	15;30;49
		3600	324/6JP	**050360P3HFP324JPV-W4**	**$4,372**	P1C	493	1.15	46.7	92.4	32.307	575	15;30;49
		3600	324/6JP	**050360P3VFP324JPV-W4**	**$4,372**	P1C	494	1.15	67.2	92.4	32.307	200/400	15;30;49
		1800	324/6JP	**050180P3EFP326JPV-W4**	**$4,500**	P1C	527	1.15	60.2	93.0	32.307	230/460	15;30;49
		1800	324/6JP	**050180P3HFP326JPV-W4**	**$4,394**	P1C	525	1.15	48.2	93.0	32.307	575	15;30;49
		1800	324/6JP	**050180P3VFP326JPV-W4**	**$4,500**	P1C	526	1.15	69.2	93.0	32.307	200/400	15;30;49
60	45	3600	326JP	**060360P3EFP326JPV***	**$5,105**	P1C	564	1.15	70.6	93.0	33.523	230/460	15;30;49
		3600	326JP	**060360P3HFP326JPV***	**$5,105**	P1C	558	1.15	56.5	93.0	33.523	575	15;30;49
		3600	326JP	**060360P3VFP326JPV***	**$5,105**	P1C	563	1.15	81.2	93.0	33.523	200/400	15;30;49
		3600	324/6JP	**060360P3EFP326JPV-W4**	**$5,105**	P1C	510	1.15	70.6	93.0	32.307	230/460	15;30;49
		3600	324/6JP	**060360P3HFP326JPV-W4**	**$5,105**	P1C	509	1.15	56.5	93.0	32.307	575	15;30;49
		3600	324/6JP	**060360P3VFP326JPV-W4**	**$5,105**	P1C	511	1.15	81.2	93.0	32.307	200/400	15;30;49
		1800	364/5JP	**060180P3EFP364JPV-W4**	**$6,142**	P1C	804	1.15	71.0	93.6	34.745	230/460	15;30;49
		1800	364/5JP	**060180P3VFP364JPV-W4**	**$6,142**	P1C	804	1.15	81.7	93.6	34.745	200/400	15;30;49
75	55	3600	364/5JP	**075360P3EFP364JPV-W4**	**$7,525**	P1C	804	1.15	85.3	93.0	34.745	230/460	15;30;49
		3600	364/5JP	**075360P3HFP364JPV-W4**	**$7,525**	P1C	803	1.15	68.2	93.0	34.745	575	15;30;49
		3600	364/5JP	**075360P3VFP364JPV-W4**	**$7,525**	P1C	806	1.15	98.1	93.0	34.745	200/400	15;30;49
		1800	364/5JP	**075180P3EFP365JPV***	**$6,967**	P1C	922	1.15	85.3	94.1	35.208	230/460	15;30;49
		1800	364/5JP	**075180P3EFP365JPV-W4**	**$6,967**	P1C	885	1.15	85.3	94.1	34.745	230/460	15;30;49
		1800	364/5JP	**075180P3VFP365JPV-W4**	**$6,967**	P1C	884	1.15	98.1	94.1	34.745	200/400	15;30;49
100	75	3600	364/5JP	**100360P3EFP365JPV-W4**	**$8,860**	P1C	875	1.15	115	93.0	34.745	230/460	15;30
		3600	364/5JP	**100360P3HFP365JPV-W4**	**$8,860**	P1C	871	1.15	92.0	93.0	34.745	575	15;30
		3600	364/5JP	**100360P3VFP365JPV-W4**	**$8,860**	P1C	875	1.15	132	93.0	34.745	200/400	15;30
		1800	404/5JP	**100180P3EFP404JPV***	**$8,825**	P1C	992	1.15	118	94.1	38.452	230/460	15;30;49
		1800	404/5JP	**100180P3EFP404JPV-W4**	**$8,825**	P1C	941	1.15	116	94.1	37.747	230/460	15;30;49
		1800	404/5JP	**100180P3VFP404JPV-W4**	**$8,825**	P1C	939	1.15	133	94.1	37.747	200/400	15;30;49

** To be discontinued and replaced by W40 model once inventory is depleted.*

Please refer to inside back cover for description of "NOTES"

For detailed specifications, data sheets, drawings and performance curves visit http://www.weg.net

Data subject to change without notice.

W40 - ODP (50Hz) – Three-Phase – IE2

HP	kW	RPM	Frame	Catalog Number	List Price	Mult. Symbol	Approx. Shipping Weight (lbs)	Service Factor	FL Amps @ High	FL. Eff (%)	"C" Dimension (in)	Voltage (V)	Notes
20	15	3000	254/6T	**020300P30FP256T-W40**	**$1,690**	W1B	284	1.15	26.0	90.2	22.285	380-415	30;32
		1500	254/6T	**020150P30FP256T-W40**	**$1,831**	W1B	359	1.15	28.8	91.7	22.285	380-415	30;32
25	18.5	3000	254/6T	**025300P30FP256T-W40**	**$2,051**	W1B	312	1.15	32.5	91.0	22.285	380-415	30;32
		1500	284TS	**025150P30FP284TS-W40**	**$2,069**	W1B	401	1.15	34.2	91.7	21.783	380-415	30;32
30	22	3000	284TS	**030300P30FP284TS-W40**	**$2,338**	W1B	382	1.15	40.0	91.0	21.783	380-415	30;32
		1500	284/6TS	**030150P30FP286TS-W40**	**$2,425**	W1B	443	1.15	39.4	92.4	23.283	380-415	30;32
40	30	3000	284/6TS	**040300P30FP286TS-W40**	**$3,171**	W1B	431	1.15	52.5	92.4	23.283	380-415	30;32
		1500	324TS	**040150P30FP324TS-W40**	**$3,050**	W1B	531	1.15	55.4	93.0	25.807	380-415	30;32
50	37	3000	324TS	**050300P30FP324TS-W40**	**$3,662**	W1B	510	1.15	66.3	92.4	25.807	380-415	30;32
		1500	324/6TS	**050150P30FP326TS-W40**	**$3,588**	W1B	580	1.15	71.9	93.0	25.807	380-415	30;32
60	45	3000	324/6TS	**060300P30FP326TS-W40**	**$4,610**	W1B	537	1.15	80.1	93.0	25.807	380-415	30;32
		1500	364/5TS	**060150P30FP365TS-W40**	**$4,455**	W1B	802	1.15	83.6	93.6	27.520	380-415	30;32
75	55	3000	364/5TS	**075300P30FP365TS-W40**	**$5,836**	W1B	840	1.15	96.8	93.0	27.520	380-415	30;32
		1500	364/5TS	**075150P30FP365TS-W40**	**$5,423**	W1B	868	1.15	99.2	94.1	27.520	380-415	30;32
100	75	3000	364/5TS	**100300P30FP365TS-W40**	**$7,075**	W1B	904	1.15	134	93.0	27.520	380-415	30;32
		1500	404/5TS	**100150P30FP405TS-W40**	**$6,975**	W1B	1118	1.15	135	94.1	31.100	380-415	30;32
125	90	3000	404/5TS	**125300P30FP405TS-W40**	**$8,927**	W1B	1109	1.15	157	93.6	31.100	380-415	30;32
		1500	444/5TS	**125150P30FP445TS-W40**	**$9,336**	W1B	1396	1.15	160	94.5	34.575	380-415	30;32
150	110	3000	444/5TS	**150300P30FP445TS-W40**	**$13,422**	W1B	1411	1.15	195	93.6	34.575	380-415	30;32
		1500	444/5TS	**150150P30FP445TS-W40**	**$10,225**	W1B	1511	1.15	199	95.0	34.575	380-415	30;32
200	150	3000	444/5TS	**200300P30FP445TS-W40**	**$14,700**	W1B	1552	1.15	258	95.0	34.575	380-415	30;32
		1500	447/9TS	**200150P30FP449TS-W40**	**$15,362**	W1B	2270	1.15	262	95.0	42.959	380-415	30;32
250	185	3000	444/5TS	**250300P30FP445TS-W40**	**$18,003**	W1B	1635	1.15	319	95.0	34.575	380-415	30;32
		1500	447/9TS	**250150P30FP449TS-W40**	**$20,127**	W1B	2459	1.15	321	95.4	42.959	380-415	30;32
300	220	3000	447/9TS	**300300P30FP449TS-W40**	**$23,464**	W1B	2261	1.15	384	95.0	42.959	380-415	30;32
		1500	5010/11TS	**300150P30FP5011TS-W4**	**$22,044**	W1B	2778	1.15	387	95.4	56.992	380-415	30;32
350	260	3000	447/9TS	**350300P30FP449TS-W40**	**$25,697**	W1B	2369	1.15	453	95.0	42.959	380-415	30;32
		1500	5010/11TS	**350150P30FP5011TS-W4**	**$29,804**	W1B	4318	1.15	446	95.4	56.992	380-415	30;32
400	300	3000	447/9TS	**400300P30FP449TS-W40**	**$27,761**	W1B	2596	1.15	509	95.4	42.959	380-415	30;32
		1500	5010/11TS	**400150P30FP5011TS-W4**	**$32,521**	W1B	4481	1.15	509	95.4	56.992	380-415	30;32

Please refer to inside back cover for description of "NOTES"

For detailed specifications, data sheets, drawings and performance curves visit http://www.weg.net

FIRE PUMP MOTORS

TEFC (50Hz) – Three-Phase – IE2

HP	kW	RPM	Frame	Catalog Number	List Price	Mult. Symbol	Approx. Shipping Weight (lbs)	Service Factor	FL Amps @ High	FL. Eff (%)	"C" Dimension (in)	Voltage (V)	Notes
15	11	3000	254/6T	**01530EP30FP254T-W22**	**$1,788**	W1	266	1.15	19.3	90.2	24.945	380-415	30;32
		1500	254/6T	**01515EP30FP254T-W22**	**$1,811**	W1	298	1.15	20.1	91.0	24.945	380-415	30;32
20	15	3000	254/6T	**02030EP30FP256T-W22**	**$2,334**	W1	306	1.15	26.3	90.2	24.945	380-415	30;32
		1500	254/6T	**02015EP30FP256T-W22**	**$2,157**	W1	347	1.15	27.7	90.9	24.945	380-415	30;32
25	18.5	3000	284/6TS	**02530EP30FP284TS-W22**	**$2,938**	W1	368	1.15	31.3	92.4	26.557	380-415	30
		1500	284/6TS	**02515EP30FP284TS-W22**	**$2,688**	W1	395	1.15	33.1	92.4	26.557	380-415	30;32
30	22	3000	284/6TS	**03030EP30FP286TS-W22**	**$3,490**	W1	428	1.15	37.6	91.5	26.557	380-415	30
		1500	284/6TS	**03015EP30FP286TS-W22**	**$3,159**	W1	447	1.15	40.0	92.1	26.557	380-415	30;32
40	30	3000	324/6TS	**04030EP30FP324TS-W22**	**$4,489**	W1	568	1.15	50.3	92.5	29.616	380-415	30;32
		1500	324/6TS	**04015EP30FP324TS-W22**	**$3,969**	W1	532	1.15	54.2	92.5	29.616	380-415	30;32
50	37	3000	324/6TS	**05030EP30FP326TS-W22**	**$5,050**	W1	592	1.15	63.0	92.8	29.616	380-415	30
		1500	324/6TS	**05015EP30FP326TS-W22**	**$4,845**	W1	567	1.15	66.2	93.0	29.616	380-415	30
60	45	3000	364/5TS	**06030EP30FP364TS-W22**	**$7,174**	W1	927	1.15	74.2	93.0	32.276	380-415	30
		1500	364/5TS	**06015EP30FP364TS-W22**	**$7,020**	W1	1029	1.15	77.6	93.8	32.276	380-415	30
75	55	3000	364/5TS	**07530EP30FP365TS-W22**	**$8,636**	W1	983	1.15	92.0	93.5	32.276	380-415	30
		1500	364/5TS	**07515EP30FP365TS-W22**	**$8,270**	W1	1050	1.15	95.3	94.5	32.276	380-415	30
100	75	3000	404/5TS	**10030EP30FP405TS-W22**	**$11,402**	W1	1192	1.15	125	94.0	36.732	380-415	30
		1500	404/5TS	**10015EP30FP405TS-W22**	**$11,105**	W1	1266	1.15	124	94.5	36.732	380-415	30
125	90	3000	444/5TS	**12530EP30FP444TS-W22**	**$14,583**	W1	1664	1.15	156	94.5	41.200	380-415	30;32
		1500	444/5TS	**12515EP30FP444TS-W22**	**$14,011**	W1	1686	1.15	158	94.6	41.200	380-415	30;32
150	110	3000	444/5TS	**15030EP30FP445TS-W22**	**$17,938**	W1	1801	1.15	185	95.0	41.200	380-415	30;32
		1500	444/5TS	**15015EP30FP445TS-W22**	**$16,549**	W1	1874	1.15	190	94.6	41.200	380-415	30
200	150	3000	445/7TS	**20030EP30FP447TS-W22**	**$22,384**	W1	2242	1.15	236	95.2	44.951	380-415	30
		1500	445/7TS	**20015EP30FP447TS-W22**	**$20,043**	W1	2107	1.15	264	95.3	44.951	380-415	30
250	185	3000	447/9TS	**25030EP30FP449TS-W22**	**$31,514**	W1	2739	1.15	293	95.6	52.588	380-415	30
		1500	447/9TS	**25015EP30FP449TS-W22**	**$25,463**	W1	2883	1.15	313	95.5	52.588	380-415	30
300	220	3000	447/9TS	**30030EP30FP449TS-W22**	**$36,356**	W1	3141	1.15	351	95.7	52.588	380-415	30;32
		1500	L447/9TS	**30015EP30FP449TS-W22**	**$29,815**	W1	3345	1.15	376	95.8	53.425	380-415	30;32

Please refer to inside back cover for description of "NOTES"

For detailed specifications, data sheets, drawings and performance curves visit http://www.weg.net

Data subject to change without notice.

Pump Motors

P-BASE MOTORS

TEFC - Three Phase - NEMA Premium®

HP and HPH types available. Suitable for dusty and moist environments providing high starting torque.

Standard Features:

- 50/60 Hz capable
- Class F insulation (Impregnation Resin and magnet Wire are class H)
- Stainless Steel Nameplate - Laser etched with high contrast background
- Regreasable ball bearings (Frames 254HP and up)
- Gasketed conduit box
- Class I, Div. 2, Groups A, B, C & D – T3, Class II, Div 2, Groups F & G – T3C

Inverter Rated:
1000:1 for variable torque

Features that make a difference:

- 1.25 Service Factor up to 100 HP
- NPT Threaded terminal box
- HP and HPH types available
- NPT Threaded terminal box

Please refer to back cover for description of "NOTES"

For detailed specifications, data sheets, drawings and performance curves visit http:// www.weg.net

P-BASE MOTORS

TEFC – Three-Phase – NEMA Premium®

HP	kW	RPM	Frame	Catalog Number	List Price	Mult. Symbol	Approx. Shipping Weight (lbs)	Service Factor	FL Amps @ High	FL. Eff (%)	"C" Dimension (in)	Voltage (V)	Notes
1	0.75	1800	143HP	00118ET3E143HP-W22	$619	P1F	54	1.25	1.43	85.5	14.199	230/460	15;51
1.5	1.1	3600	L143HP	00156ET3E143HP-W22	$573	P1F	40	1.25	1.98	84.0	16.255	230/460	15
		1800	145HP	00158ET3E145HP-W22	$663	P1F	62	1.25	2.00	86.5	15.175	230/460	15;39
2	1.5	3600	145HP	00236ET3E145HP-W22	$581	P1F	51	1.25	2.65	85.5	15.175	230/460	15
		1800	145HP	00218ET3E145HP-W22	$730	P1F	63	1.25	2.72	86.5	15.175	230/460	15
3	2.2	3600	L145HP	00336ET3E145HP-W22	$863	P1F	74	1.25	3.71	86.5	17.2	230/460	15
		3600	182HP	00336ET3E182HP-W22	$925	P1F	88	1.25	3.68	86.5	16.841	230/460	15
		1800	182HP	00318ET3E182HP-W22	$923	P1F	108	1.25	3.90	89.5	16.841	230/460	15;39
5	3.7	3600	184HP	00536ET3E184HP-W22	$1,084	P1F	113	1.25	5.96	88.5	17.9	230/460	15
		1800	184HP	00518ET3E184HP-W22	$1,045	P1F	117	1.25	6.40	89.5	17.9	230/460	15
7.5	5.5	3600	L184HP	00736ET3E184HP-W22	$1,331	P1F	149	1.25	8.76	89.5	19.2	230/460	15
		3600	213HP	00736ET3E213HP-W22	$1,440	P1F	139	1.25	8.57	89.5	19.850	230/460	15;51
		1800	213HP	00718ET3E213HP-W22	$1,371	P1F	180	1.25	9.29	91.7	19.850	230/460	15
10	7.5	3600	215HP	01036ET3E215HP-W22	$1,727	P1F	193	1.25	11.5	90.2	21.346	230/460	15
		1800	215HP	01018ET3E215HP-W22	$1,641	P1F	201	1.25	12.6	91.7	21.346	230/460	15
15	11	3600	215HP	01536ET3E215HP-W22	$2,240	P1F	227	1.25	17.0	91.0	21.346	230/460	15
		3600	254HP	01536ET3E254HP-W22	$2,462	P1F	253	1.25	17.2	91.0	25.573	230/460	15
		1800	254HP	01518ET3E254HP-W22	$2,463	P1F	364	1.25	18.0	92.4	25.573	230/460	15
20	15	3600	254HP	02036ET3E254HP-W22	$2,738	P1F	341	1.25	23.2	91.0	25.573	230/460	15
		3600	256HP	02036ET3E256HP-W22	$2,955	P1F	351	1.25	23.2	91.0	27.305	230/460	15
		1800	256HP	02018ET3E256HP-W22	$2,721	P1F	308	1.25	24.4	93.0	27.305	230/460	15
25	18.5	3600	256HP	02536ET3E256HP-W22	$3,336	P1F	417	1.00	28.1	91.7	27.305	230/460	15
		3600	284HP	02536ET3E284HP-W22	$3,627	P1F	361	1.25	28.5	91.7	28.594	230/460	15
		3600	284HPH	02536ET3E284HPH-W22	$3,627	P1F	535	1.25	28.5	91.7	30.344	230/460	15
		1800	284HP	02518ET3E284HP-W22	$3,624	P1F	450	1.25	29.5	93.6	28.594	230/460	15
		1800	284HPH	02518ET3E284HPH-W22	$3,624	P1F	484	1.25	29.5	93.6	30.344	230/460	15
30	22	3600	286HP	03036ET3E286HP-W22	$4,365	P1F	392	1.25	33.8	91.7	30.089	230/460	15
		3600	286HPH	03036ET3E286HPH-W22	$4,365	P1F	576	1.25	33.8	91.7	31.839	230/460	15;51
		1800	286HP	03018ET3E286HP-W22	$3,967	P1F	436	1.25	35.1	93.6	30.089	230/460	15
		1800	286HPH	03018ET3E286HPH-W22	$3,967	P1F	610	1.25	35.1	93.6	31.839	230/460	15
40	30	3600	324HP	04036ET3E324HP-W22	$5,457	P1F	546	1.25	46.7	92.4	33.037	230/460	15
		1800	324HP	04018ET3E324HP-W22	$5,247	P1F	634	1.25	47.1	94.1	33.037	230/460	15
50	37	3600	326HP	05036ET3E326HP-W22	$6,681	P1F	583	1.25	56.1	93.0	34.531	230/460	15;51
		1800	326HP	05018ET3E326HP-W22	$6,009	P1F	668	1.25	60.6	94.5	34.531	230/460	15
60	45	3600	326HP	06036ET3E326HP-W22	$8,632	P1F	658	1.15	68.6	93.6	34.531	230/460	15
		3600	364/5HP	06036ET3E364HP-W22	$9,484	P1F	823	1.25	68.2	94.1	37.940	230/460	15
		1800	364/5HP	06018ET3E364HP-W22	$8,525	P1F	1100	1.25	68.4	95.0	37.940	230/460	15
75	55	3600	364/5HP	07536ET3E365HP-W22	$10,977	P1F	845	1.25	81.9	93.6	37.940	230/460	15
		1800	364/5HP	07518ET3E365HP-W22	$9,352	P1F	1114	1.25	82.3	95.4	37.940	230/460	15

continued on next page

Please refer to inside back cover for description of "NOTES"

For detailed specifications, data sheets, drawings and performance curves visit http://www.weg.net

Data subject to change without notice.

TEFC – Three-Phase – NEMA Premium® - *continued*

HP	kW	RPM	Frame	Catalog Number	List Price	Mult. Symbol	Approx. Shipping Weight (lbs)	Service Factor	FL Amps @ High	FL. Eff (%)	"C" Dimension (in)	Voltage (V)	Notes
100	75	3600	404/5HP	10036ET3E405HP-W22	$12,908	P1F	1043	1.25	112	94.1	41.340	230/460	15
		3600	404/5HPH	10036ET3E405HPH-W22	$12,908	P1F	1227	1.25	112	94.1	41.340	230/460	15;51
		3600	404/5HP	10036ET3G405HP-W22	$12,908	P1F	1486	1.25	112	94.1	41.340	460	15;51
		3600	404/5HPH	10036ET3G405HPH-W22	$12,908	P1F	1592	1.25	112	94.1	41.340	460	15
		1800	404/5HP	10018ET3E405HP-W22	$11,222	P1F	1138	1.25	112	95.4	41.340	230/460	15
		1800	404/5HPH	10018ET3E405HPH-W22	$11,222	P1F	1604	1.25	112	95.4	41.340	230/460	15
		1800	404/5HP	10018ET3G405HP-W22	$11,222	P1F	1475	1.25	112	95.4	41.340	460	15
		1800	404/5HPH	10018ET3G405HPH-W22	$11,222	P1F	1475	1.25	112	95.4	41.340	460	15
125	90	3600	444/5HP	12536ET3G444HP-W22	$17,969	P1F	2146	1.15	134	95.0	44.854	460	15
		1800	444/5HP	12518ET3G444HP-W22	$15,687	P1F	2060	1.15	142	95.4	44.854	460	15
150	110	3600	444/5HP	15036ET3G445HP-W22	$20,517	P1F	2275	1.15	163	95.0	44.854	460	15
		1800	444/5HP	15018ET3G445HP-W22	$17,845	P1F	2262	1.15	193	95.0	44.854	460	15

Please refer to inside back cover for description of "NOTES"

For detailed specifications, data sheets, drawings and performance curves visit http://www.weg.net

TRU-METRIC™

TEFC – Foot Mount A-258
TEFC – Foot Mount – FF-Face A-261

ATEX MOTORS

TEFC – Ex ec A-263
TEFC – db – IE3 . . . . . A-267

IEC Tru-Metric™ Motors

GENERAL PURPOSE MOTORS

TEFC - Three-Phase

This line is designed and built according to IEC Standards 60034 and 60072.

Aluminum

Standard Features:

- 60 Hz (1.25 Service Factor up to 200HP) and 50 Hz (1.0 Service Factor)
- Class F insulation (Impregnation Resin and Magnet wire are class H)
- F2 mounted as standard (F1 convertible)
- Stainless Steel Nameplate - Laser etched with high contrast background
- Regreasable ball bearings (Frames 160 and up)
- Gasketed conduit box
- Class I, Div. 2, Groups A, B, C & D – T3, Class II, Div 2, Groups F & G – T3C (Cast Iron Frames only)
- Suitable for WYE/Delta Start (W and Y voltage code motors)
- 660-690V; Sine Wave Only and with Nameplate Mod

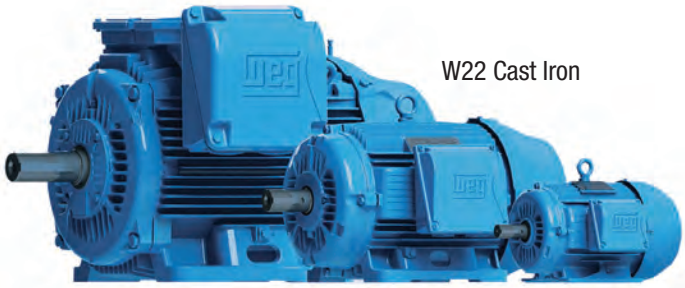

W22 Cast Iron

Features that make a difference:

- 1.25 Service Factor for 60 Hz operation (IE3) up to 200 hp
- 1.00 Service Factor for 50 Hz operation (IE3)
- Optimized ventilation system for cooler operation and reduced noise levels
- Solid base for reduced vibration levels (Cast Iron Frames)
- Frames 225 and up can easily be F1 (B3L) converted by simply rotating the terminal box adapter or F3 by removing it
- Aluminum frames have removable feet for easy F1, F2 and F3 (B3L, B3R, B3T) conversion
- Terminal blocks

Inverter Rated (IE3):
1000:1 for variable torque
12:1 for constant torque

** 460V and below only*

IEC Tru-Metric

GENERAL PURPOSE MOTORS

TEFC – Foot Mount

HP	kW	RPM	Frame	Catalog Number	List Price	Mult. Symbol	Approx. Shipping Weight (lbs)	Service Factor	FL Amps @ High	FL. Eff (%)	"C" Dimension (in)	Voltage (V)	Notes
0.25	0.18	3600//3000	63	.1836EP3EAL63-W22	$280	T1	14	1.15	0.48	68.0	8.504	230/460//190/380	2;7
		1800//1500	63	.1818EP3EAL63-W22	$267	T1	16	1.15	0.51	69.0	8.504	230/460//190/380	2;7
		1200//1000	71	.1812EP3EAL71-W22	$338	T1	22	1.15	0.77	61.0	9.764	230/460//190/380	2;7
		900//750	80	.1809EP3EAL80-W22	$540	T1	30	1.25	0.80	50.5	10.866	230/460//190/380	2;7
		900//750	80	.1809EP3WAL80-W22	$540	T1	28	1.15	0.80	50.5	10.866	460//220-240/380-415	2;7
0.33	0.25	3600//3000	63	.2536EP3EAL63-W22	$286	T1	16	1.15	0.62	70.0	8.504	230/460//190/380	2;7
		1800//1500	71	.2518EP3EAL71-W22	$282	T1	24	1.15	0.68	73.0	9.764	230/460//190/380	2;7
		1200//1000	71	.2512EP3EAL71-W22	$363	T1	24	1.15	1.00	64.0	9.764	230/460//190/380	2;7
		900//750	80	.2509EP3EAL80-W22	$583	T1	29	1.15	0.87	57.5	10.866	230/460//190/380	2;7
		900//750	80	.2509EP3WAL80-W22	$583	T1	32	1.15	0.87	57.5	10.866	460//220-240/380-415	2;7
0.5	0.37	3600//3000	71	.3736EP3EAL71-W22	$309	T1	22	1.15	0.83	73.0	9.764	230/460//190/380	2;7
		1800//1500	71	.3718EP3EAL71-W22	$290	T1	24	1.15	1.06	73.0	9.764	230/460//190/380	2;7
		1200//1000	80	.3712EP3EAL80-W22	$378	T1	27	1.15	1.07	64.0	10.866	230/460//190/380	2;7
		900//750	90S/L	.3709EP3EAL90S-W22	$662	T1	40	1.15	1.35	61.5	12.953	230/460//190/380	2;7
		900//750	90S/L	.3709EP3WAL90S/L-W22	$662	T1	40	1.15	1.35	61.5	12.953	460//220-240/380-415	2;7
0.75	0.55	3600//3000	71	.5536EP3EAL71-W22	$316	T1	23	1.15	1.14	76.0	9.764	230/460//190/380	2;7
		1800//1500	80	.5518EP3EAL80-W22	$333	T1	28	1.15	1.25	77.0	10.866	230/460//190/380	2;7
		1200//1000	80	.5512EP3EAL80-W22	$405	T1	32	1.15	1.63	66.0	10.866	230/460//190/380	2;7
		900//750	90S/L	.5509EP3EAL90L-W22	$696	T1	46	1.15	2.12	62.5	12.953	230/460//190/380	2;7
		900//750	90S/L	.5509EP3WAL90S/L-W22	$696	T1	58	1.15	2.12	62.5	12.953	460//220-240/380-415	2;7
1	0.75	3600//3000	80	.7536ET3WAL80-W22	$397	T1	27	1.25	1.43	81.5	10.866	460//220-240/380-415	2;7
		1800//1500	90S/L	.7518ET3EAL90S/L-W22	$420	T1	42	1.25	1.47	85.5	12.953	230/460//190/380	2;7
		1800//1500	90S/L	.7518ET3WAL90S/L-W22	$420	T1	43	1.25	1.47	85.5	12.953	460//220-240/380-415	2;7
		1200//1000	90S/L	.7512ET3EAL90S-W22	$537	T1	47	1.25	1.68	82.5	12.953	230/460//190/380	2;7
		1200//1000	90S/L	.7512ET3WAL90S-W22	$537	T1	51	1.25	1.68	82.5	12.953	460//220-240/380-415	2;7
		900//750	100L	.7509ET3EAL100L-W22	$869	T1	68	1.25	2.11	75.5	14.803	230/460//190/380	2;7
1.5	1.1	3600//3000	80	00136ET3EAL80-W22	$444	T1	29	1.25	2.03	84.0	10.866	230/460//190/380	2;7
		3600//3000	80	00136ET3WAL80-W22	$444	T1	30	1.25	2.03	84.0	10.866	460//220-240/380-415	2;7
		1800//1500	90S/L	00118ET3EAL90S-W22	$470	T1	44	1.25	2.05	86.5	12.953	230/460//190/380	2;7
		1800//1500	90S/L	00118ET3WAL90S-W22	$470	T1	44	1.25	2.05	86.5	12.953	460//220-240/380-415	2;7
		1200//1000	100L	00112ET3EAL100L-W22	$746	T1	80	1.00	2.32	87.5	14.803	230/460//190/380	2;7
2	1.5	3600//3000	90S/L	00156ET3EAL90S-W22	$504	T1	44	1.25	2.69	85.5	12.953	230/460//190/380	2;7
		3600//3000	90S/L	00156ET3WAL90S-W22	$504	T1	44	1.25	2.69	85.5	12.953	460//220-240/380-415	2;7
		1800//1500	90S/L	00158ET3EAL90L-W22	$524	T1	49	1.25	2.79	86.5	12.953	230/460//190/380	2;7
		1800//1500	90S/L	00158ET3WAL90L-W22	$524	T1	49	1.25	2.79	86.5	12.953	460//220-240/380-415	2;7
		1200//1000	100L	00152ET3WAL100L-W22	$812	T1	76	1.25	3.13	88.5	16.535	460//220-240/380-415	2,7
		1200//1000	112M	00152ET3EAL112M-W22	$923	T1	93	1.25	3.08	88.5	15.472	230/460//190/380	2;7;51
		1200//1000	112M	00152ET3WAL112M-W22	$923	T1	93	1.25	3.08	88.5	15.472	460//220-240/380-415	2;7;51
		900//750	112M	00159ET3YAL112M-W22	$1,001	T1	90	1.25	3.50	84.0	15.472	460//380-415/660-690	2;7
3	2.2	3600//3000	90S/L	00236ET3EAL90L-W22	$756	T1	50	1.25	3.85	86.5	12.953	230/460//190/380	2;7
		3600//3000	90S/L	00236ET3WAL90L-W22	$756	T1	49	1.25	3.85	86.5	12.953	460//220-240/380-415	2;7
		1800//1500	100L	00218ET3EAL100L-W22	$630	T1	66	1.25	4.11	89.5	14.803	230/460//190/380	2;7
		1800//1500	100L	00218ET3WAL100L-W22	$630	T1	66	1.25	4.11	89.5	14.803	460//220-240/380-415	2;7
		1200//1000	132S	00212ET3EAL132S-W22	$1,166	T1	131	1.25	4.41	89.5	19.291	230/460//190/380	2;7
		1200//1000	132S	00212ET3YAL132S-W22	$1,166	T1	136	1.25	4.41	89.5	19.291	460//380-415/660-690	2;7
		900//750	132S	00209ET3YAL132S-W22	$1,412	T1	145	1.25	4.75	85.5	19.291	460//380-415/660-690	2;7

continued on next page

Please refer to inside back cover for description of "NOTES"

For detailed specifications, data sheets, drawings and performance curves visit http:// www.weg.net

Data subject to change without notice.

TEFC – Foot Mount - *continued*

HP	kW	RPM	Frame	Catalog Number	List Price	Mult. Symbol	Approx. Shipping Weight (lbs)	Service Factor	FL Amps @ High	FL. Eff (%)	"C" Dimension (in)	Voltage (V)	Notes
4	3	3600//3000	100L	00336ET3EAL100L-W22	$805	T1	65	1.25	5.01	88.5	14.803	230/460//190/380	2;7
		3600//3000	100L	00336ET3WAL100L-W22	$805	T1	65	1.25	5.01	88.5	14.803	460//220-240/380-415	2;7
		1800//1500	100L	00318ET3EAL100L-W22	$672	T1	77	1.25	5.33	89.5	14.803	230/460//190/380	2;7
		1800//1500	100L	00318ET3WAL100L-W22	$672	T1	77	1.25	5.33	89.5	14.803	460//220-240/380-415	2;7
		1200//1000	132M	00312ET3EAL132M-W22	$1,247	T1	137	1.25	6.01	89.5	19.291	230/460//190/380	2;7
		1200//1000	132M	00312ET3YAL132M-W22	$1,247	T1	147	1.25	6.01	89.5	19.291	460//380-415/660-690	2;7
		900//750	132M	00309ET3EAL132M-W22	$1,610	T1	193	1.25	6.29	85.5	19.291	230/460//190/380	2;7
		900//750	132M	00309ET3YAL132M-W22	$1,610	T1	156	1.25	6.29	85.5	19.291	460//380-415/660-690	2;7
5.5	4	3600//3000	112M	00436ET3EAL112M-W22	$874	T1	86	1.25	6.67	88.5	15.472	230/460//190/380	2;7
		3600//3000	112M	00436ET3YAL112M-W22	$874	T1	86	1.25	6.67	88.5	15.472	460//380-415/660-690	2;7
		1800//1500	112M	00418ET3EAL112M-W22	$679	T1	93	1.25	7.28	89.5	15.472	230/460//190/380	2;7
		1800//1500	112M	00418ET3YAL112M-W22	$679	T1	93	1.25	7.28	89.5	15.472	460//380-415/660-690	2;7
		1200//1000	132M	00412ET3EAL132M-W22	$1,254	T1	147	1.25	7.90	89.5	19.291	230/460//190/380	2;7
		1200//1000	132M	00412ET3YAL132M-W22	$1,254	T1	147	1.25	7.90	89.5	19.291	460//380-415/660-690	2;7
		900//750	160M	00409ET3Y160M-W22	$1,947	T1	299	1.25	8.17	86.5	23.543	460//380-415/660-690	7
7.5	5.5	3600//3000	132S	00536ET3EAL132S-W22	$1,144	T1	136	1.25	8.97	89.5	19.291	230/460//190/380	2;7
		3600//3000	132S	00536ET3YAL132S-W22	$1,144	T1	136	1.25	8.97	89.5	19.291	460//380-415/660-690	2;7
		1800//1500	132S	00518ET3EAL132S-W22	$932	T1	142	1.25	9.07	91.7	19.291	230/460//190/380	2;7
		1800//1500	132S	00518ET3YAL132S-W22	$932	T1	142	1.25	9.07	91.7	19.291	460//380-415/660-690	2;7
		1800/1500	132S	00518ET3Y132S-W22	$953	T1	161	1.25	9.07	91.7	19.291	460//380-415	7
		1200//1000	132M/L	00512ET3Y132M/L-W22	$1,760	T1	206	1.25	10.8	91.0	20.276	460//380-415/660-690	7
		900//750	160M	00509ET3Y160M-W22	$2,244	T1	306	1.25	11.1	87.5	23.543	460//380-415/660-690	7
10	7.5	3600//3000	132S	00736ET3EAL132S-W22	$1,292	T1	148	1.25	12.3	90.2	19.291	230/460//190/380	2;7
		3600//3000	132S	00736ET3YAL132S-W22	$1,292	T1	147	1.25	12.3	90.2	19.291	460//380-415/660-690	2;7
		1800//1500	132M	00718ET3EAL132M-W22	$1,110	T1	159	1.25	12.2	91.7	19.291	230/460//190/380	2;7
		1800//1500	132M	00718ET3YAL132M-W22	$1,110	T1	159	1.25	12.2	91.7	19.291	460//380-415/660-690	2;7
		1200//1000	160M	00712ET3Y160M-W22	$2,306	T1	306	1.25	13.1	91.0	23.543	460//380-415/660-690	7
		900//750	160L	00709ET3Y160L-W22	$2,774	T1	352	1.25	15.2	88.5	25.276	460//380-415/660-690	7
15	11	3600//3000	160M	01136ET3Y160M-W22	$2,102	T1	304	1.25	17.9	91.7	23.543	460//380-415/660-690	7
		1800//1500	160M	01118ET3Y160M-W22	$1,726	T1	321	1.25	18.2	92.4	23.543	460//380-415/660-690	7
		1200//1000	160L	01112ET3Y160L-W22	$3,160	T1	354	1.25	18.8	91.7	25.276	460//380-415/660-690	7
		900//750	180L	01109ET3Y180L-W22	$4,031	T1	419	1.25	19.5	89.5	27.638	460//380-415/660-690	7
20	15	3600//3000	160M	01536ET3Y160M-W22	$2,413	T1	320	1.25	24.4	91.7	23.543	460//380-415/660-690	7
		1800//1500	160L	01518ET3Y160L-W22	$2,118	T1	375	1.25	25.0	93.0	25.276	460//380-415/660-690	7
		1200//1000	180L	01512ET3Y180L-W22	$3,884	T1	447	1.25	24.7	91.7	27.638	460//380-415/660-690	7
		900//750	200L	01509ET3Y200L-W22	$5,158	T1	517	1.25	28.0	91.0	30.197	460//380-415/660-690	7
25	18.5	3600//3000	160L	01836ET3Y160L-W22	$2,925	T1	353	1.25	29.9	92.4	25.276	460//380-415/660-690	7
		1800//1500	180M	01818ET3Y180M-W22	$2,689	T1	436	1.25	30.6	93.6	26.142	460//380-415/660-690	7
		1200//1000	200L	01812ET3Y200L-W22	$4,886	T1	552	1.25	30.8	93.0	30.197	460//380-415/660-690	7
		900//750	225S/M	01809ET3Y225S/M-W22	$5,902	T1	830	1.25	31.6	93.0	34.882	460//380-415/660-690	7
30	22	3600//3000	180M	02236ET3Y180M-W22	$3,492	T1	424	1.25	34.7	92.4	26.142	460//380-415/660-690	7
		1800//1500	180L	02218ET3Y180L-W22	$3,225	T1	457	1.25	36.0	93.6	27.638	460//380-415/660-690	7
		1200//1000	200L	02212ET3Y200L-W22	$4,924	T1	601	1.25	37.1	93.0	30.197	460//380-415/660-690	7
		900//750	225S/M	02209ET3Y225S/M-W22	$7,506	T1	885	1.25	37.6	93.0	34.882	460//380-415/660-690	7

continued on next page

Please refer to inside back cover for description of "NOTES"

For detailed specifications, data sheets, drawings and performance curves visit http:// www.weg.net

GENERAL PURPOSE MOTORS

TEFC – Foot Mount - *continued*

HP	kW	RPM	Frame	Catalog Number	List Price	Mult. Symbol	Approx. Shipping Weight (lbs)	Service Factor	FL Amps @ High	FL. Eff (%)	"C" Dimension (in)	Voltage (V)	Notes
40	30	3600//3000	200L	03036ET3Y200L-W22	$4,877	T1	575	1.25	47.1	93.0	30.197	460//380-415/660-690	7
		1800//1500	200L	03018ET3Y200L-W22	$4,312	T1	580	1.25	49.4	94.1	30.197	460//380-415/660-690	7
		1200//1000	225S/M	03012ET3Y225S/M-W22	$7,689	T1	1055	1.25	47.6	94.1	34.882	460//380-415/660-690	7
		900//750	250S/M	03009ET3Y250S/M-W22	$8,858	T1	1078	1.25	50.9	93.6	37.992	460//380-415/660-690	7
50	37	3600//3000	200L	03736ET3Y200L-W22	$5,487	T1	587	1.25	61.3	93.6	30.197	460//380-415/660-690	7
		1800//1500	225S/M	03718ET3Y225S/M-W22	$6,984	T1	1041	1.25	58.5	94.5	34.882	460//380-415/660-690	7
		1200//1000	250S/M	03712ET3Y250S/M-W22	$9,947	T1	1266	1.25	58.8	94.1	37.992	460//380-415/660-690	7
		900//750	280S/M	03709ET3Y280S/M-W22	$11,751	T1	1481	1.25	64.1	94.1	42.165	460//380-415/660-690	7
60	45	3600//3000	225S/M	04536ET3Y225S/M-W22	$7,961	T1	1053	1.25	66.7	94.1	33.701	460//380-415/660-690	7
		1800//1500	225S/M	04518ET3Y225S/M-W22	$7,391	T1	1022	1.25	69.9	95.0	34.882	460//380-415/660-690	7
		1200//1000	280S/M	04512ET3Y280S/M-W22	$11,023	T1	1681	1.25	74.7	94.5	42.165	460//380-415/660-690	7
		900//750	280S/M	04509ET3Y280S/M-W22	$12,815	T1	1631	1.25	77.0	94.1	42.165	460//380-415/660-690	7
75	55	3600//3000	250S/M	05536ET3Y250S/M-W22	$9,847	T1	1259	1.25	80.3	94.5	37.992	460//380-415/660-690	7
		1800//1500	250S/M	05518ET3Y250S/M-W22	$8,961	T1	1206	1.25	85.1	95.4	37.992	460//380-415/660-690	7
		1200//1000	280S/M	05512ET3Y280S/M-W22	$13,622	T1	1794	1.25	90.2	94.5	42.165	460//380-415/660-690	7
		900//750	315S/M	05509ET3Y315S/M-W22	$15,379	T1	2436	1.25	93.7	94.5	50.157	460//380-415/660-690	7
100	75	3600//3000	280S/M	07536ET3Y280S/M-W22	$12,472	T1	1776	1.25	111	94.5	42.165	460//380-415/660-690	7
		1800//1500	280S/M	07518ET3Y280S/M-W22	$12,353	T1	1738	1.25	116	95.4	42.165	460//380-415/660-690	7
		1200//1000	315S/M	07512ET3Y315S/M-W22	$16,479	T1	2399	1.25	122	95.0	50.157	460//380-415/660-690	7
		900//750	315S/M	07509ET3Y315S/M-W22	$18,647	T1	2701	1.25	127	95.0	50.157	460//380-415/660-690	7
125	90	3600//3000	280S/M	09036ET3Y280S/M-W22	$16,720	T1	1862	1.25	132	95.0	42.165	460//380-415/660-690	7
		1800//1500	280S/M	09018ET3Y280S/M-W22	$15,220	T1	1835	1.25	139	95.4	42.165	460//380-415/660-690	7
		1200//1000	315S/M	09012ET3Y315S/M-W22	$19,448	T1	2601	1.25	146	95.4	50.157	460//380-415/660-690	7
		900//750	315S/M	09009ET3Y315S/M-W22	$21,288	T1	2884	1.25	152	95.0	50.157	460//380-415/660-690	7
150	110	3600//3000	315S/M	11036ET3Y315S/M-W22	$21,018	T1	2382	1.25	163	95.0	48.976	460//380-415/660-690	7
		1800//1500	280S/M	11018ET3Y280S/M-W22	$17,078	T1	2210	1.25	170	95.8	42.165	460//380-415/660-690	7
		1200//1000	315S/M	11012ET3Y315S/M-W22	$22,507	T1	2730	1.25	178	95.8	50.157	460//380-415/660-690	7
		900//750	315L	11009ET3Y315L-W22	$27,910	T1	3008	1.25	186	95.4	54.685	460//380-415/660-690	7
175	132	3600//3000	315S/M	13236ET3Y315S/M-W22	$23,180	T1	2662	1.25	193	95.4	48.976	460//380-415/660-690	7;43
		1800//1500	315S/M	13218ET3Y315S/M-W22	$19,732	T1	2540	1.25	203	96.2	50.157	460//380-415/660-690	7
		1200//1000	315S/M	13212ET3Y315S/M-W22	$25,642	T1	3031	1.25	214	95.8	50.157	460//380-415/660-690	7
		900//750	315L	13209ET3Y315L-W22	$33,687	T1	3796	1.25	223	95.4	54.685	460//380-415/660-690	7;43
200	150	3600//3000	315S/M	15036ET3Y315S/M-W22	$26,249	T1	2682	1.25	219	95.4	48.976	460//380-415/660-690	7
		1800//1500	315S/M	15018ET3Y315S/M-W22	$21,772	T1	2784	1.25	228	96.2	50.157	460//380-415/660-690	7
		1200//1000	315L	15012ET3Y315L-W22	$28,298	T1	3557	1.15	240	95.8	54.685	460//380-415/660-690	7;43
250	185	3600//3000	315S/M	18536ET3Y315S/M-W22	$26,529	T1	2900	1.25	269	95.8	48.976	460//380-415/660-690	7
		1800//1500	315S/M	18518ET3Y315S/M-W22	$26,247	T1	2948	1.25	284	96.2	50.157	460//380-415/660-690	7
		1200//1000	355M/L	18512ET3Y355M/L-W22	$43,876	T1	3666	1.15	311	95.8	58.346	460//380-415/660-690	7
300	220	3600//3000	315L	22036ET3Y315L-W22	$44,212	T1	3468	1.25	315	96.2	53.268	460//380-415/660-690	7;43
		1800//1500	315L	22018ET3Y315L-W22	$36,234	T1	3113	1.25	338	96.2	54.685	460//380-415/660-690	7;43
		1200//1000	355M/L	22012ET3Y355M/L-W22	$46,322	T1	4507	1.15	370	95.8	58.346	460//380-415/660-690	7;43
350	260	3600//3000	355M/L	26036ET3Y355M/L-W22	$50,637	T1	4975	1.15	373	96.2	55.591	460//380-415/660-690	7;43;51
		1800//1500	355M/L	26018ET3Y355M/L-W22	$43,761	T1	4218	1.15	399	96.2	58.346	460//380-415/660-690	7;43
		1200//1000	355M/L	26012ET3Y355M/L-W22	$53,001	T1	5075	1.15	436	95.9	58.346	460//380-415/660-690	7;43
400	300	3600//3000	355M/L	30036ET3Y355M/L-W22	$66,321	T1	4034	1.15	315	96.2	55.591	460//380-415/660-690	7;43
		1800//1500	355M/L	30018ET3Y355M/L-W22	$60,292	T1	4337	1.00	466	96.2	58.346	460//380-415/660-690	7;43
		1800//1500	355M/L	33018ET3Y355M/L-W22	$64,557	T1	4906	1.15	505	96.5	58.346	460//380-415/660-690	7;43

Please refer to inside back cover for description of "NOTES"

For detailed specifications, data sheets, drawings and performance curves visit http:// www.weg.net

Data subject to change without notice.

TEFC – (FF) B35(F2) D-Flange Style with Feet

HP	kW	RPM	Frame	Catalog Number	List Price	Mult. Symbol	Approx. Shipping Weight (lbs)	Service Factor	FL Amps @ High	FL. Eff (%)	"C" Dimension (in)	Voltage (V)	Notes
0.5	0.37	1800//1500	71	.3718EP3EAL71FF-W22	$340	T1	26	1.15	1.06	73.0	9.764	230/460//380-415	2;7
0.75	0.55	3600//3000	71	.5536EP3EAL71FF-W22	$366	T1	23	1.15	1.14	76.0	9.764	230/460//380-415	2;7
		1800//1500	80	.5518EP3EAL80FF-W22	$383	T1	28	1.15	1.25	77.0	10.866	230/460//380-415	2;7
1	0.75	1800//1500	90S/L	.7518ET3EAL90S/LFF-W	$479	T1	42	1.25	1.47	85.5	12.953	230/460//380-415	2;7
		1800//1500	90S/L	.7518ET3WAL90S/LFF-W	$479	T1	43	1.25	1.47	85.5	12.953	460//220-240/380-415	2;7
2	1.5	1800//1500	90S/L	00158ET3EAL90LFF-W22	$583	T1	49	1.25	2.79	86.5	12.953	208-230/460//380-415	2;7
		1800//1500	90L	00158ET3WAL90LFF-W22	$583	T1	51	1.25	2.79	86.5	12.953	460//220-240/380-415	
		1200//1000	100L	00152ET3WAL100LFF-W2	$882	T1	76	1.25	3.04	88.5	14.803	460//220-240/380-415	2;7
3	2.2	3600/3000	90L	00236ET3WAL90LFF-W22	$815	T1	46	1.25	3.85	86.5	12.953	460//220-240/380-415	
		1800//1500	100L	00218ET3EAL100LFF-W2	$700	T1	66	1.25	4.11	89.5	14.803	230/460//380-415	2;7
		1800//1500	100L	00218ET3WAL100LFF-W2	$700	T1	68	1.25	4.05	87.5	14.803	460//220-240/380-415	
4	3	1800//1500	100L	00318ET3WAL100LFF-W2	$742	T1	77	1.25	5.33	89.5	14.803	460//220-240/380-415	2;7
5.5	4	3600//3000	112M	00436ET3YAL112MFF-W2	$944	T1	86	1.25	6.67	88.5	15.472	460//380-415	2;7
		1800//1500	112M	00418ET3YAL112MFF-W2	$749	T1	93	1.25	7.28	89.5	15.472	460//380-415	2;7
		1200//1000	132M	00412ET3YAL132MFF-W2	$1,333	T1	147	1.25	7.90	89.5	19.291	460//380-415	2;7
7.5	5.5	3600/3000	132S	00536ET3YAL132SFF-W2	$1,223	T1	135	1.25	8.97	89.5	19.291	460//380-415	39
		1800//1500	132S	00518ET3YAL132SFF-W2	$1,011	T1	142	1.25	9.07	91.7	19.291	460//380-415	2;7
10	7.5	3600//3000	132S	00736ET3YAL132SFF-W2	$1,371	T1	147	1.25	12.3	90.2	19.291	460//380-415	2;7
		1800//1500	132M	00718ET3YAL132MFF-W2	$1,189	T1	159	1.25	12.2	91.7	19.291	460//380-415	2;7
15	11	3600//3000	160M	01136ET3Y160MFF-W22	$2,219	T1	304	1.25	17.9	91.7	23.543	460//380-415	7
		1800//1500	160M	01118ET3Y160MFF-W22	$1,843	T1	304	1.25	18.2	92.4	23.543	460//380-415	7
20	15	1800//1500	160L	01518ET3Y160LFF-W22	$2,235	T1	358	1.25	25.0	93.0	25.276	460//380-415	7
30	22	1800//1500	180L	02218ET3Y180LFF-W22	$3,361	T1	501	1.25	36.0	93.6	27.638	460//380-415 V	7
50	37	3600//3000	200L	03736ET3Y200LFF-W22	$5,789	T1	595	1.25	61.3	93.6	30.197	460//380-415 V	7;51
		1800//1500	225S/M	03718ET3Y225S/MFF-W22	$7,774	T1	1058	1.25	58.5	94.5	34.882	460//380-415 V	7

Please refer to inside back cover for description of "NOTES"

For detailed specifications, data sheets, drawings and performance curves visit http:// www.weg.net

ATEX Motors

INCREASED SAFETY

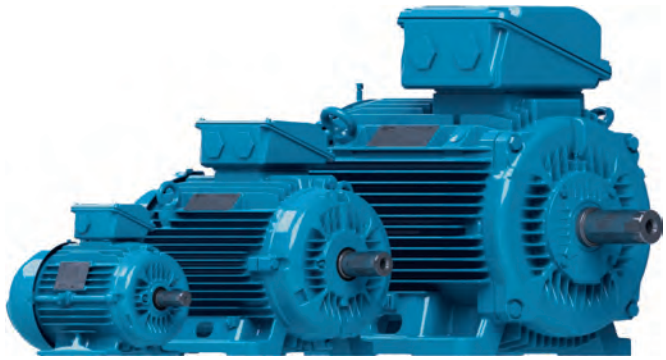

TEFC - Ex ec

Ex ec motors do not require certification by any third party entity (a manufacturer's compliance declaration is sufficient). Nevertheless the Ex ec motors manufactured by WEG are certified by Ex NB BASEEFA.

Standard Features:

- 50 Hz and and 60 Hz rated (1.00 Service Factor)
- Class F insulation (Impregnation Resin and magnet Wire are class H)
- F3 mounted as standard
- Stainless Steel Nameplate - Laser etched with high contrast background
- Regreasable ball bearings (Frames 160 and up)
- Gasketed conduit box
- Zone 2 & 22, Groups IIA, IIB and IIC
- Temperature Class T3
- Suitable for WYE/Delta Start
- Design N
- Conductive plastic fan (frames 63 up to 315)
- Aluminum fan (frame 355)
- Thermistor 2 per phase

TEFC – Ex ec

HP	kW	RPM	Frame	Catalog Number	List Price	Mult. Symbol	Approx. Shipping Weight (lbs)	Service Factor	FL Amps @ High	FL. Eff (%)	"C" Dimension (in)	Voltage (V)	Notes
0.25	0.18	3000//3600	63	E0.1836EP3WAX63F3-W2	$364	XN	22	1.00	0.51	63.6	8.504	220-240/380-415//440-460	1;8;27
		1500//1800	63	E0.1818EP3WAX63F3-W2	$365	XN	20	1.00	0.57	64.7	8.504	220-240/380-415//440-460	1;8;27
		1000//1200	71	E0.1812EP3WAX71F3-W2	$476	XN	29	1.00	0.74	58.6	9.843	220-240/380-415//440-460	1;8;27
0.33	0.25	3000//3600	63	E0.2536EP3WAX63F3-W2	$373	XN	23	1.00	0.71	64.8	8.504	220-240/380-415//440-460	1;8;27
		1500//1800	71	E0.2518EP3WAX71F3-W2	$415	XN	27	1.00	0.74	68.5	9.843	220-240/380-415//440-460	1;8;27
		1000//1200	71	E0.2512EP3WAX71F3-W2	$483	XN	32	1.00	1.05	61.6	9.843	220-240/380-415//440-460	1;8;27
0.5	0.37	3000//3600	71	E0.3736EP3WAX71F3-W2	$408	XN	24	1.00	0.88	71.2	9.843	220-240/380-415//440-460	1;8;27
		1500//1800	71	E0.3718EP3WAX71F3-W2	$427	XN	28	1.00	1.03	72.7	9.843	220-240/380-415//440-460	1;8;27
		1000//1200	80	E0.3712EP3WAX80F3-W2	$507	XN	33	1.00	1.10	67.6	10.906	220-240/380-415//440-460	1;8;27
0.75	0.55	3000//3600	71	E0.5536EP3WAX71F3-W2	$415	XN	29	1.00	1.20	74.1	9.843	220-240/380-415//440-460	1;8;27
		1500//1800	80	E0.5518EP3WAX80F3-W2	$488	XN	38	1.00	1.36	77.1	10.906	220-240/380-415//440-460	1;8;27
		1000//1200	80	E0.5512EP3WAX80F3-W2	$523	XN	36	1.00	1.45	73.1	10.906	220-240/380-415//440-460	1;8;27
1	0.75	3000//3600	80	E0.7536EP3WAX80F3-W2	$499	XN	37	1.00	1.56	79.5	10.906	220-240/380-415//440-460	1;8;27
		3000//3600	80	E0.7536ET3WAX80F3-W2	$659	XN	27	1.00	1.63	81.1	10.906	220-240/380-415//440-460	1;8;27
		1500//1800	80	E0.7518EP3WAX80F3-W2	$507	XN	39	1.00	1.61	80.1	10.906	220-240/380-415//440-460	1;8;27
		1500//1800	80	E0.7518ET3WAX80F3-W2	$670	XN	39	1.00	1.60	82.8	10.906	220-240/380-415//440-460	1;8;27
		1000//1200	90S	E0.7512EP3WAX90SF3-W	$660	XN	48	1.00	1.92	76.4	11.969	220-240/380-415//440-460	1;8;27
		1000//1200	L90S	E0.7512ET3WAXL90SF3W	$872	XN	51	1.00	1.91	79.1	13.169	220-240/380-415//440-460	1;8;27
1.5	1.1	3000//3600	80	E00136EP3WAX80F3-W22	$538	XN	41	1.00	2.33	80.2	10.906	220-240/380-415//440-460	1;8;27
		3000//3600	80	E00136ET3WAX80F3-W22	$711	XN	35	1.00	2.32	83.4	10.906	220-240/380-415//440-460	1;8;27
		1500//1800	90S	E00118EP3WAX90SF3-W2	$578	XN	53	1.00	2.36	82.1	11.969	220-240/380-415//440-460	1;8;27
		1500//1800	90S	E00118ET3WAX90SF3-W2	$763	XN	51	1.00	2.34	84.8	11.969	220-240/380-415//440-460	1;8;27
		1000//1200	90L	E00112EP3WAX90LF3-W2	$700	XN	58	1.00	2.80	78.1	12.953	220-240/380-415//440-460	1;8;27
		1000//1200	100L	E00112ET3WAX100LF3-W	$924	XN	126	1.00	2.68	81.5	14.803	220-240/380-415//440-460	1;8;27
2	1.5	3000//3600	90S	E00156EP3WAX90SF3-W2	$614	XN	45	1.00	3.08	82.5	11.969	220-240/380-415//440-460	1;8;27
		3000//3600	90S	E00156ET3WAX90SF3-W2	$811	XN	50	1.00	3.06	85.2	11.969	220-240/380-415//440-460	1;8;27
		1500//1800	90L	E00158EP3WAX90LF3-W2	$673	XN	56	1.00	3.22	83.1	12.953	220-240/380-415//440-460	1;8;27
		1500//1800	90L	E00158ET3WAX90LF3-W2	$889	XN	59	1.00	3.15	86.1	12.953	220-240/380-415//440-460	1;8;27
		1000//1200	100L	E00152EP3WAX100LF3-W	$872	XN	73	1.00	3.71	80.3	14.803	220-240/380-415//440-460	1;8;27
		1000//1200	100L	E00152ET3WAX100LF3-W	$1,152	XN	98	1.00	3.71	82.8	14.803	220-240/380-415//440-460	1;8;27,51
3	2.2	3000//3600	90L	E00236EP3WAX90LF3-W2	$700	XN	63	1.00	4.56	83.9	12.953	220-240/380-415//440-460	1;8;27
		3000//3600	90L	E00236ET3WAX90LF3-W2	$924	XN	56	1.00	4.37	86.5	12.953	220-240/380-415//440-460	1;8;27
		1500//1800	100L	E00218EP3WAX100LF3-W	$845	XN	85	1.00	4.56	84.9	14.803	220-240/380-415//440-460	1;8;27
		1500//1800	100L	E00218ET3WAX100LF3-W	$1,116	XN	77	1.00	4.50	87.2	16.299	220-240/380-415//440-460	1;8;27
		1000//1200	112M	E00212EP3YAX112MF3-W	$1,181	XN	87	1.00	5.34	83.0	15.512	380-415/660-690//440-460	1;8;27
		1000//1200	112M	E00212ET3YAX112MF3-W	$1,561	XN	110	1.00	5.16	84.7	15.512	380-415/660-690//440-460	1;8;27
4	3	3000//3600	100L	E00336EP3WAX100LF3-W	$916	XN	89	1.00	5.85	85.0	14.803	220-240/380-415//440-460	1;8;27
		3000//3600	100L	E00336ET3WAX100LF3-W	$1,210	XN	80	1.00	5.68	87.4	14.803	220-240/380-415//440-460	1;8;27
		1500//1800	100L	E00318EP3WAX100LF3-W	$1,016	XN	86	1.00	6.07	86.0	14.803	220-240/380-415//440-460	1;8;27
		1500//1800	L100L	E00318ET3WAXL100LF3W	$1,342	XN	86	1.00	6.07	88.1	16.457	220-240/380-415//440-460	1;8;27
		1000//1200	132S	E00312EP3YAX132SF3-W	$1,684	XN	140	1.00	7.34	83.6	17.795	380-415/660-690//440-460	1;8;27
		1000//1200	132S	E00312ET3YAX132SF3-W	$2,225	XN	147	1.00	6.84	86.0	17.795	380-415/660-690//440-460	1;8;27
5.5	4	3000//3600	112M	E00436EP3YAX112MF3-W	$1,174	XN	87	1.00	7.50	86.3	15.512	380-415/660-690//440-460	1;8;27
		3000//3600	112M	E00436ET3YAX112MF3-W	$1,552	XN	94	1.00	7.49	88.4	15.512	380-415/660-690//440-460	1;8;27
		1500//1800	112M	E00418EP3YAX112MF3-W	$1,388	XN	96	1.00	8.20	87.0	15.512	380-415/660-690//440-460	1;8;27
		1500//1800	112M	E00418ET3YAX112MF3-W	$1,712	XN	100	1.00	8.09	89.3	15.512	380-415/660-690//440-460	1;8;27
		1000//1200	132M	E00412EP3YAX132MF3-W	$1,910	XN	155	1.00	9.50	84.9	19.252	380-415/660-690//440-460	1;8;27
		1000//1200	132M	E00412ET3YAX132MF3-W	$2,524	XN	158	1.00	9.03	86.8	19.252	380-415/660-690//440-460	1;8;27

continued on next page

Please refer to inside back cover for description of "NOTES"

For detailed specifications, data sheets, drawings and performance curves visit http://www.weg.net

INCREASED SAFETY

TEFC – Ex ec - *continued*

HP	kW	RPM	Frame	Catalog Number	List Price	Mult. Symbol	Approx. Shipping Weight (lbs)	Service Factor	FL Amps @ High	FL. Eff (%)	"C" Dimension (in)	Voltage (V)	Notes
7.5	5.5	3000//3600	132S	E00536EP3YAX132SF3-W	$1,613	XN	137	1.00	10.5	88.0	17.795	380-415/660-690//440-460	1;8;27
		3000//3600	132S	E00536ET3YAX132SF3-W	$2,132	XN	145	1.00	10.6	89.2	17.795	380-415/660-690//440-460	1;8;27
		1500//1800	132S	E00518EP3YAX132SF3-W	$1,798	XN	162	1.00	10.4	87.7	17.795	380-415/660-690//440-460	1;8;27
		1500//1800	132S	E00518ET3YAX132SF3-W	$2,218	XN	150	1.00	10.1	89.8	17.795	380-415/660-690//440-460	1;8;27
		1000//1200	132M	E00512EP3YAX132MF3-W	$2,312	XN	164	1.00	12.9	86.2	19.252	380-415/660-690//440-460	1;8;27
		1000//1200	132M/L	E00512ET3YAX132MLF3W	$3,052	XN	207	1.00	12.6	88.0	20.276	380-415/660-690//440-460	1;8;27
10	7.5	3000//3600	132S	E00736EP3YAX132SF3-W	$1,833	XN	144	1.00	13.8	88.7	17.795	380-415/660-690//440-460	1;8;27
		3000//3600	132S	E00736ET3YAX132SF3-W	$2,422	XN	158	1.00	13.9	90.3	17.795	380-415/660-690//440-460	1;8;27
		1500//1800	132M	E00718EP3YAX132MF3-W	$2,135	XN	164	1.00	13.9	89.4	19.252	380-415/660-690//440-460	1;8;27
		1500//1800	132M	E00718ET3YAX132MF3-W	$2,634	XN	167	1.00	13.9	90.4	19.252	380-415/660-690//440-460	1;8;27
		1000//1200	160M	E00712EP3YAX160MF3-W	$3,221	XN	286	1.00	14.7	88.5	23.543	380-415/660-690//440-460	1;8;27
		1000//1200	160M	E00712ET3YAX160MF3-W	$4,256	XN	298	1.00	14.6	89.1	23.543	380-415/660-690//440-460	1;8;27
15	11	3000//3600	160M	E01136EP3YAX160MF3-W	$3,150	XN	266	1.00	20.1	90.6	23.543	380-415/660-690//440-460	1;8;27
		3000//3600	160M	E01136ET3YAX160MF3-W	$4,163	XN	291	1.00	19.7	91.4	23.543	380-415/660-690//440-460	1;8;27
		1500//1800	160M	E01118EP3YAX160MF3-W	$3,331	XN	269	1.00	20.9	90.3	23.543	380-415/660-690//440-460	1;8;27
		1500//1800	160M	E01118ET3YAX160MF3-W	$4,108	XN	287	1.00	20.6	91.5	23.543	380-415/660-690//440-460	1;8;27
		1000//1200	160L	E01112EP3YAX160LF3-W	$4,243	XN	337	1.00	21.7	89.3	25.276	380-415/660-690//440-460	1;8;27
		1000//1200	160L	E01112ET3YAX160LF3-W	$5,607	XN	347	1.00	21.7	90.3	25.276	380-415/660-690//440-460	1;8;27
20	15	3000//3600	160M	E01536EP3YAX160MF3-W	$3,398	XN	284	1.00	27.2	91.4	23.543	380-415/660-690//440-460	1;8;27
		3000//3600	160M	E01536ET3YAX160MF3-W	$4,490	XN	302	1.00	27.7	91.9	23.543	380-415/660-690//440-460	1;8;27
		1500//1800	160L	E01518EP3YAX160LF3-W	$3,622	XN	313	1.00	28.2	91.2	25.276	380-415/660-690//440-460	1;8;27
		1500//1800	160L	E01518ET3YAX160LF3-W	$4,696	XN	335	1.00	28.0	92.1	25.276	380-415/660-690//440-460	1;8;27
		1000//1200	180L	E01512EP3YAX180LF3-W	$5,388	XN	411	1.00	27.1	90.6	27.638	380-415/660-690//440-460	1;8;27
		1000//1200	180L	E01512ET3YAX180LF3-W	$7,119	XN	435	1.00	27.3	91.2	27.638	380-415/660-690//440-460	1;8;27
25	18.5	3000//3600	160L	E01836EP3YAX160LF3-W	$3,960	XN	356	1.00	33.2	92.2	25.276	380-415/660-690//440-460	1;8;27
		3000//3600	160L	E01836ET3YAX160LF3-W	$5,233	XN	335	1.00	33.6	92.4	25.276	380-415/660-690//440-460	1;8;27
		1500//1800	180M	E01818EP3YAX180MF3-W	$5,439	XN	389	1.00	34.7	91.7	26.142	380-415/660-690//440-460	1;8;27
		1500//1800	180M	E01818ET3YAX180MF3-W	$6,708	XN	397	1.00	34.7	92.6	26.142	380-415/660-690//440-460	1;8;27
		1000//1200	200L	E01812EP3YAX200LF3-W	$7,499	XN	502	1.00	35.2	91.3	30.197	380-415/660-690//440-460	1;8;27
		1000//1200	200L	E01812ET3YAX200LF3-W	$9,910	XN	504	1.00	36.0	91.7	30.197	380-415/660-690//440-460	1;8;27
30	22	3000//3600	180M	E02236EP3YAX180MF3-W	$5,140	XN	389	1.00	38.1	92.4	26.142	380-415/660-690//440-460	1;8;27
		3000//3600	180M	E02236ET3YAX180MF3-W	$6,792	XN	402	1.00	39.3	92.7	26.142	380-415/660-690//440-460	1;8;27
		1500//1800	180L	E02218EP3YAX180LF3-W	$5,934	XN	446	1.00	39.9	92.4	27.638	380-415/660-690//440-460	1;8;27
		1500//1800	180L	E02218ET3YAX180LF3-W	$7,319	XN	435	1.00	40.6	93.0	27.638	380-415/660-690//440-460	1;8;27
		1000//1200	200L	E02212EP3YAX200LF3-W	$7,956	XN	526	1.00	41.8	91.6	30.197	380-415/660-690//440-460	1;8;27
		1000//1200	200L	E02212ET3YAX200LF3-W	$10,539	XN	526	1.00	42.0	92.2	30.197	380-415/660-690//440-460	1;8;27
40	30	3000//3600	200L	E03036EP3YAX200LF3-W	$7,515	XN	539	1.00	52.2	93.0	30.197	380-415/660-690//440-460	1;8;27
		3000//3600	200L	E03036ET3YAX200LF3-W	$9,931	XN	548	1.00	54.6	93.3	30.197	380-415/660-690//440-460	1;8;27
		1500//1800	200L	E03018EP3YAX200LF3-W	$7,716	XN	520	1.00	56.9	92.9	30.197	380-415/660-690//440-460	1;8;27
		1500//1800	200L	E03018ET3YAX200LF3-W	$10,004	XN	533	1.00	56.4	93.6	30.197	380-415/660-690//440-460	1;8;27
		1000//1200	225S/M	E03012EP3YAX225SMF3W	$12,034	XN	906	1.00	54.9	92.7	34.882	380-415/660-690//440-460	1;8;27
		1000//1200	225S/M	E03012ET3YAX225SMF3W	$15,902	XN	952	1.00	54.7	93.0	34.882	380-415/660-690//440-460	1;8;27
50	37	3000//3600	200L	E03736EP3YAX200LF3-W	$7,987	XN	592	1.00	64.0	93.5	30.197	380-415/660-690//440-460	1;8;27
		3000//3600	200L	E03736ET3YAX200LF3-W	$10,554	XN	581	1.00	67.0	93.7	30.197	380-415/660-690//440-460	1;8;27
		1500//1800	225S/M	E03718EP3YAX225SMF3W	$10,284	XN	868	1.00	64.9	93.3	34.882	380-415/660-690//440-460	1;8;27
		1500//1800	225S/M	E03718ET3YAX225SMF3W	$13,553	XN	920	1.00	66.0	93.9	34.882	380-415/660-690//440-460	1;8;27
		1000//1200	250S/M	E03712EP3YAX250SMF3W	$13,422	XN	1086	1.00	65.0	93.2	37.992	380-415/660-690//440-460	1;8;27
		1000//1200	250S/M	E03712ET3YAX250SMF3W	$17,736	XN	1068	1.00	65.5	93.5	37.992	380-415/660-690//440-460	1;8;27

continued on next page

Please refer to inside back cover for description of "NOTES"

For detailed specifications, data sheets, drawings and performance curves visit http:// www.weg.net

Data subject to change without notice.

TEFC – Ex ec - *continued*

HP	kW	RPM	Frame	Catalog Number	List Price	Mult. Symbol	Approx. Shipping Weight (lbs)	Service Factor	FL Amps @ High	FL. Eff (%)	"C" Dimension (in)	Voltage (V)	Notes
60	45	3000//3600	225S/M	E04536EP3YAX225SMF3W	$12,588	XN	899	1.00	75.8	93.8	33.701	380-415/660-690//440-460	1;8;27
		3000//3600	225S/M	E04536ET3YAX225SMF3W	$16,634	XN	1011	1.00	75.4	94.3	33.701	380-415/660-690//440-460	1;8;27,51
		1500//1800	225S/M	E04518EP3YAX225SMF3W	$11,696	XN	914	1.00	81.5	93.7	34.882	380-415/660-690//440-460	1;8;27
		1500//1800	225S/M	E04518ET3YAX225SMF3W	$15,411	XN	996	1.00	79.0	94.4	34.882	380-415/660-690//440-460	1;8;27
		1000//1200	280S/M	E04512EP3YAX280SMF3W	$20,481	XN	1478	1.00	83.7	93.5	42.165	380-415/660-690//440-460	1;8;27
		1000//1200	280S/M	E04512ET3YAX280SMF3W	$27,064	XN	1589	1.00	82.2	94.0	42.165	380-415/660-690//440-460	1;8;27
75	55	3000//3600	250S/M	E05536EP3YAX250SMF3W	$14,893	XN	1031	1.00	92.5	94.0	37.992	380-415/660-690//440-460	1;8;27
		3000//3600	250S/M	E05536ET3YAX250SMF3W	$19,680	XN	1134	1.00	93.2	94.4	37.992	380-415/660-690//440-460	1;8;27
		1500//1800	250S/M	E05518EP3YAX250SMF3W	$14,354	XN	1099	1.00	94.6	94.1	37.992	380-415/660-690//440-460	1;8;27
		1500//1800	250S/M	E05518ET3YAX250SMF3W	$18,916	XN	1091	1.00	97.5	94.6	37.992	380-415/660-690//440-460	1;8;27
		1000//1200	280S/M	E05512EP3YAX280SMF3W	$20,781	XN	1551	1.00	99.4	93.9	42.165	380-415/660-690//440-460	1;8;27
		1000//1200	280S/M	E05512ET3YAX280SMF3W	$27,355	XN	1644	1.00	100	94.3	42.165	380-415/660-690//440-460	1;8;27
100	75	3000//3600	280S/M	E07536EP3YAX280SMF3W	$20,430	XN	1553	1.00	127	94.3	42.165	380-415/660-690//440-460	1;8;27
		3000//3600	280S/M	E07536ET3YAX280SMF3W	$26,996	XN	1677	1.00	126	94.9	42.165	380-415/660-690//440-460	1;8;27
		1500//1800	280S/M	E07518EP3YAX280SMF3W	$20,544	XN	1573	1.00	130	94.4	42.165	380-415/660-690//440-460	1;8;27
		1500//1800	280S/M	E07518ET3YAX280SMF3W	$27,072	XN	1567	1.00	130	95.2	42.165	380-415/660-690//440-460	1;8;27
		1000//1200	315S/M	E07512EP3YAX315SMF3W	$23,092	XN	2010	1.00	137	94.2	50.157	380-415/660-690//440-460	1;8;27
		1000//1200	315S/M	E07512ET3YAX315SMF3W	$30,515	XN	2183	1.00	137	95.0	50.157	380-415/660-690//440-460	1;8;27
125	90	3000//3600	280S/M	E09036EP3YAX280SMF3W	$21,712	XN	1604	1.00	152	94.5	42.165	380-415/660-690//440-460	1;8;27
		3000//3600	280S/M	E09036ET3YAX280SMF3W	$28,691	XN	1744	1.00	149	95.2	42.165	380-415/660-690//440-460	1;8;27
		1500//1800	280S/M	E09018EP3YAX280SMF3W	$21,307	XN	1648	1.00	154	94.7	42.165	380-415/660-690//440-460	1;8;27
		1500//1800	280S/M	E09018ET3YAX280SMF3W	$28,077	XN	1722	1.00	154	95.4	42.165	380-415/660-690//440-460	1;8;27
		1000//1200	315S/M	E09012EP3YAX315SMF3W	$27,076	XN	2133	1.00	159	94.6	50.157	380-415/660-690//440-460	1;8;27
		1000//1200	315S/M	E09012ET3YAX315SMF3W	$35,779	XN	2337	1.00	162	95.2	50.157	380-415/660-690//440-460	1;8;27
150	110	3000//3600	315S/M	E11036EP3YAX315SMF3W	$26,144	XN	2091	1.00	183	94.9	48.976	380-415/660-690//440-460	1;8;27
		3000//3600	315S/M	E11036ET3YAX315SMF3W	$34,547	XN	2139	1.00	184	95.4	48.976	380-415/660-690//440-460	1;8;27
		1500//1800	315S/M	E11018EP3YAX315SMF3W	$27,068	XN	2120	1.00	192	95.0	50.157	380-415/660-690//440-460	1;8;27
		1500//1800	315S/M	E11018ET3YAX315SMF3W	$35,670	XN	2249	1.00	189	95.5	50.157	380-415/660-690//440-460	1;8;27
		1000//1200	315S/M	E11012EP3YAX315SMF3W	$34,367	XN	2294	1.00	194	94.9	50.157	380-415/660-690//440-460	1;8;27
		1000//1200	315S/M	E11012ET3YAX315SMF3W	$45,413	XN	2447	1.00	196	95.1	50.157	380-415/660-690//440-460	1;8;27
175	132	3000//3600	315S/M	E13236EP3YAX315SMF3W	$29,862	XN	2217	1.00	217	95.2	48.976	380-415/660-690//440-460	1;8;27
		3000//3600	315S/M	E13236ET3YAX315SMF3W	$39,500	XN	2249	1.00	218	95.6	48.976	380-415/660-690//440-460	1;8;27
		1500//1800	315S/M	E13218EP3YAX315SMF3W	$31,689	XN	2265	1.00	224	95.2	50.157	380-415/660-690//440-460	1;8;27
		1500//1800	315S/M	E13218ET3YAX315SMF3W	$42,877	XN	2381	1.00	226	95.6	50.157	380-415/660-690//440-460	1;8;27
		1000//1200	315S/M	E13212EP3YAX315SMF3W	$52,853	XN	2448	1.00	233	95.0	50.157	380-415/660-690//440-460	1;8;27
		1000//1200	315S/M	E13212ET3YAX315SMF3W	$76,749	XN	2580	1.00	240	95.6	50.157	380-415/660-690//440-460	1;8;27
200	150	3000//3600	315S/M	E15036EP3YAX315SMF3W	$31,360	XN	2073	1.00	253	94.8	48.976	220-240/380-415//440-460	1;8;27
		3000//3600	315S/M	E15036ET3YAX315SMF3W	$41,396	XN	2469	1.00	245	95.6	48.976	380-415/660-690//440-460	1;8;27
		1500//1800	315S/M	E15018EP3YAX315SMF3W	$33,286	XN	2073	1.00	254	95.4	50.157	220-240/380-415//440-460	1;8;27
		1500//1800	315S/M	E15018ET3YAX315SMF3W	$43,938	XN	2425	1.00	259	96.0	50.157	380-415/660-690//440-460	1;8;27
		1000//1200	315L	E15012ET3YAX315LF3W2	$82,712	XN	2800	1.00	269	95.7	54.685	380-415/660-690//440-460	1;8;27
		1000//1200	355M/L	E15012EP3YAX355MLF3W	$62,660	XN	2073	1.00	291	95.0	58.346	220-240/380-415//440-460	1;8;27

continued on next page

INCREASED SAFETY

TEFC – Ex ec - *continued*

HP	kW	RPM	Frame	Catalog Number	List Price	Mult. Symbol	Approx. Shipping Weight (lbs)	Service Factor	FL Amps @ High	FL. Eff (%)	"C" Dimension (in)	Voltage (V)	Notes
220	160	3000//3600	315S/M	E16036EP3YAX315SMF3W	$38,870	XN	2778	1.00	262	95.3	48.976	380-415/660-690//440-460	1;8;27
		3000//3600	315S/M	E16036ET3YAX315SMF3W	$51,363	XN	2535	1.00	264	95.8	48.976	380-415/660-690//440-460	1;8;27
		1500//1800	315S/M	E16018EP3YAX315SMF3W	$36,046	XN	2385	1.00	271	95.4	50.157	380-415/660-690//440-460	1;8;27
		1500//1800	315S/M	E16018ET3YAX315SMF3W	$47,534	XN	2535	1.00	273	95.8	50.157	380-415/660-690//440-460	1;8;27
		1000//1200	315L	E16012EP3YAX315LF3-W	$60,176	XN	2862	1.00	282	95.2	54.685	380-415/660-690//440-460	1;8;27
		1000//1200	315L	E16012ET3YAX315LF3-W	$79,990	XN	2866	1.00	287	95.8	54.685	380-415/660-690//440-460	1;8;27
		1000//1200	355M/L	E16012EP3YAX355MLF3W	$65,792	XN	3488	1.00	290	96.0	58.346	380-415/660-690//440-460	1;8;27
		1000//1200	355M/L	E16012ET3YAX355MLF3W	$86,940	XN	3592	1.00	302	95.8	58.346	380-415/660-690//440-460	1;8;27
270	200	3000//3600	355M/L	E20036EP3YAX355MLF3W	$66,531	XN	3922	1.00	320	95.6	55.591	380-415/660-690//440-460	1;8;27
		1500//1800	315L	E20018ET3YAX315LF3-W	$70,770	XN	2800	1.00	333	96.1	54.685	380-415/660-690//440-460	1;8;27
		1500//1800	355M/L	E20018EP3YAX355MLF3W	$64,081	XN	3380	1.00	346	95.6	58.346	380-415/660-690//440-460	1;8;27
		1500//1800	355M/L	E20018ET3YAX355MLF3W	$76,925	XN	3580	1.00	344	96.3	58.346	380-415/660-690//440-460	1;8;27
		1000//1200	315L	E20012EP3YAX315LF3-W	$66,948	XN	3435	1.00	356	95.4	54.685	380-415/660-690//440-460	1;8;27
		1000//1200	355M/L	E20012EP3YAX355MLF3W	$74,007	XN	3907	1.00	368	95.7	58.346	380-415/660-690//440-460	1;8;27
		1000//1200	355M/L	E20012ET3YAX355MLF3W	$97,795	XN	3857	1.00	367	95.9	58.346	380-415/660-690//440-460	1;8;27
340	250	3000//3600	315L	E25036EP3YAX315LF3-W	$73,948	XN	3351	1.00	400	95.6	53.268	380-415/660-690//440-460	1;8;27
		3000//3600	355M/L	E25036EP3YAX355MLF3W	$82,191	XN	4275	1.00	392	96.4	55.591	380-415/660-690//440-460	1;8;27
		1500//1800	315L	E25018EP3YAX315LF3-W	$62,457	XN	3239	1.00	417	95.9	54.685	380-415/660-690//440-460	1;8;27
		1500//1800	315L	E25018ET3YAX315LF3-W	$76,550	XN	3307	1.00	424	96.4	54.685	380-415/660-690//440-460	1;8;27
		1500//1800	355M/L	E25018EP3YAX355MLF3W	$67,456	XN	3525	1.00	432	95.8	58.346	380-415/660-690//440-460	1;8;27
		1500//1800	355M/L	E25018ET3YAX355MLF3W	$83,195	XN	3702	1.00	424	96.4	58.346	380-415/660-690//440-460	1;8;27
		1000//1200	355M/L	E25012EP3YAX355MLF3W	$88,256	XN	4229	1.00	461	95.5	58.346	380-415/660-690//440-460	1;8;27
		1000//1200	355M/L	E25012ET3YAX355MLF3W	$111,338	XN	4320	1.00	464	96.0	58.346	380-415/660-690//440-460	1;8;27

Please refer to inside back cover for description of "NOTES"

For detailed specifications, data sheets, drawings and performance curves visit http:// www.weg.net

Data subject to change without notice.

ATEX Motors

EXPLOSION PROOF

TEFC - Ex db - IE3

- 50 Hz and and 60 Hz rated (1.00 Service Factor)
- Class F insulation (impregnation resin and magnet wire are class H)
- F3 mounted as standard
- Stainless Steel Nameplate - Laser etched with high contrast background
- Regreasable ball bearings (Frames 225 and up)
- Gasketed conduit box
- Zone 1 and 2, Groups IIA and IIB, class of temperature T4
- Suitable for WYE/Delta Start
- Design N
- Conductive plastic fan (frames 63 up to 315)
- Aluminum fan (frame 355)
- Lip Seal on both endshields
- Thermistors 1 per phase
- IP56
- CT: 2:1
- VFD Suitable

ATEX Motors

EXPLOSION PROOF

TEFC – Ex db - IE3

HP	kW	RPM	Frame	Catalog Number	List Price	Mult. Symbol	Approx. Shipping Weight (lbs)	Service Factor	FL Amps @ High	FL. Eff (%)	"C" Dimension (in)	Voltage (V)	Notes
1	0.75	3000//3600	80	E0.7536XT3WAX80F3-W2	$1,432	XD	51	1	1.65	81.1	12.205	220-240/380-415//440-460	1;8;27
		1500//1800	80	E0.7518XT3WAX80F3-W2	$1,450	XD	55	1	1.66	82.5	12.205	220-240/380-415//440-460	1;8;27
		1000//1200	90S/L	E0.7512XT3WAX90LF3-W	$1,355	XD	103	1	1.91	79.1	15.118	220-240/380-415//440-460	1;8;27
1.5	1.1	3000//3600	80	E00136XT3WAX80F3-W2	$1,489	XD	53	1	2.32	83.4	12.205	220-240/380-415//440-460	1;8;27
		1500//1800	90S/L	E00118XT3WAX90LF3-W	$1,507	XD	100	1	2.34	84.8	15.118	220-240/380-415//440-460	1;8;27
		1000//1200	100L	E00112XT3WAX100LF3-W	$1,794	XD	108	1	2.76	81.5	17.244	220-240/380-415//440-460	1;8;27
2	1.5	3000//3600	90S/L	E00156XT3WAX90SF3-W	$1,549	XD	96	1	3.1	84.2	15.118	220-240/380-415//440-460	1;8;27
		1500//1800	90S/L	E00158XT3WAX90LF3-W	$1,681	XD	106	1	3.16	85.7	15.118	220-240/380-415//440-460	1;8;27
		1000//1200	100L	E00152XT3WAX100LF3-W	$1,985	XD	119	1	3.71	82.8	17.244	220-240/380-415//440-460	1;8;27
3	2.2	3000//3600	90S/L	E00236XT3WAX90LF3-W	$1,733	XD	103	1	4.37	86.5	15.118	220-240/380-415//440-460	1;8;27
		1500//1800	100L	E00218XT3WAX100LF3-W	$2,015	XD	115	1	4.56	87.2	17.244	220-240/380-415//440-460	1;8;27
		1000//1200	112M	E00212XT3YAX112MF3-W	$2,305	XD	157	1	5.24	84.7	17.953	380-415/660-690//440-460	1;8;27
4	3	3000//3600	100L	E00336XT3WAX100LF3-W	$2,167	XD	115	1	5.68	87.4	17.244	220-240/380-415//440-460	1;8;27
		1500//1800	100L	E00318XT3WAX100LF3-W	$2,415	XD	136	1	6.07	88.1	17.244	220-240/380-415//440-460	1;8;27
		1000//1200	132S/M	E00312XT3YAX132SF3-W	$3,643	XD	214	1	6.87	85.6	20.63	380-415/660-690//440-460	1;8;27
5.5	4	3000//3600	112M	E00436XT3YAX112MF3-W	$2,728	XD	146	1	7.58	88.4	17.953	380-415/660-690//440-460	1;8;27
		1500//1800	112M	E00418XT3YAX112MF3-W	$2,789	XD	157	1	8.35	88.9	17.953	380-415/660-690//440-460	1;8;27
		1000//1200	132S/M	E00412XT3YAX132MF3-W	$4,076	XD	214	1	9.03	86.8	20.63	380-415/660-690//440-460	1;8;27
7.5	5.5	3000//3600	132S/M	E00536XT3YAX132SF3-W	$3,484	XD	196	1	10.6	89.2	20.63	380-415/660-690//440-460	1;8;27
		1500//1800	132S/M	E00518XT3YAX132SF3-W	$3,418	XD	207	1	10.4	89.8	20.63	380-415/660-690//440-460	1;8;27
		1000//1200	132S/M	E00512XT3YAX132MF3-W	$4,294	XD	254	1	13	88	20.63	380-415/660-690//440-460	1;8;27
10	7.5	3000//3600	132S/M	E00736XT3YAX132SF3-W	$4,018	XD	214	1	13.9	90.3	20.63	380-415/660-690//440-460	1;8;27
		1500//1800	132S/M	E00718XT3YAX132MF3-W	$4,164	XD	225	1	13.9	90.4	20.63	380-415/660-690//440-460	1;8;27
		1000//1200	160M/L	E00712XT3YAX160MF3-W	$5,669	XD	381	1	14.6	89.1	28.228	380-415/660-690//440-460	1;8;27
15	11	3000//3600	160M/L	E01136XT3YAX160MF3-W	$4,687	XD	405	1	20.2	91.4	28.228	380-415/660-690//440-460	1;8;27
		1500//1800	160M/L	E01118XT3YAX160MF3-W	$4,691	XD	388	1	20.7	91.4	28.228	380-415/660-690//440-460	1;8;27
		1000//1200	160M/L	E01112XT3YAX160LF3-W	$5,968	XD	430	1	21.7	90.5	28.228	380-415/660-690//440-460	1;8;27
20	15	3000//3600	160M/L	E01536XT3YAX160MF3-W	$5,564	XD	422	1	27.7	91.9	28.228	380-415/660-690//440-460	1;8;27
		1500//1800	160M/L	E01518XT3YAX160LF3-W	$5,207	XD	441	1	28	92.1	28.228	380-415/660-690//440-460	1;8;27
		1000//1200	180M/L	E01512XT3YAX180LF3-W	$7,273	XD	542	1	27.8	91.6	29.606	380-415/660-690//440-460	1;8;27
25	18.5	3000//3600	160M/L	E01836XT3YAX160LF3-W	$6,684	XD	441	1	33.6	92.4	28.228	380-415/660-690//440-460	1;8;27
		1500//1800	180M/L	E01818XT3YAX180MF3-W	$6,847	XD	542	1	34.7	92.6	29.606	380-415/660-690//440-460	1;8;27
		1000//1200	200M/L	E01812XT3YAX200LF3-W	$9,468	XD	646	1	36.5	91.7	32.323	380-415/660-690//440-460	1;8;27
30	22	3000//3600	180M/L	E02236XT3YAX180MF3-W	$8,022	XD	503	1	39.3	92.7	29.606	380-415/660-690//440-460	1;8;27
		1500//1800	180M/L	E02218XT3YAX180LF3-W	$7,578	XD	562	1	40.6	93	29.606	380-415/660-690//440-460	1;8;27
		1000//1200	200M/L	E02212XT3YAX200LF3-W	$10,720	XD	695	1	42	92.2	32.323	380-415/660-690//440-460	1;8;27
40	30	3000//3600	200M/L	E03036XT3YAX200LF3-W	$9,971	XD	646	1	53.9	93.3	32.323	380-415/660-690//440-460	1;8;27
		1500//1800	200M/L	E03018XT3YAX200LF3-W	$9,850	XD	695	1	56.4	93.6	32.323	380-415/660-690//440-460	1;8;27
		1000//1200	225S/M	E03012XT3YAX225SMF3W	$14,618	XD	1138	1	54.7	93	37.441	380-415/660-690//440-460	1;8;27
50	37	3000//3600	200M/L	E03736XT3YAX200LF3-W	$12,218	XD	670	1	67	93.7	32.323	380-415/660-690//440-460	1;8;27
		1500//1800	225S/M	E03718XT3YAX225SMF3W	$12,542	XD	1087	1	66	93.9	37.441	380-415/660-690//440-460	1;8;27
		1000//1200	250S/M	E03712XT3YAX250SMF3W	$17,149	XD	1363	1	65.5	93.5	39.724	380-415/660-690//440-460	1;8;27
60	45	3000//3600	225S/M	E04536XT3YAX225SMF3W	$19,498	XD	1105	1	76.4	94.2	36.26	380-415/660-690//440-460	1;8;27
		1500//1800	225S/M	E04518XT3YAX225SMF3W	$14,516	XD	1153	1	80.9	94.4	37.441	380-415/660-690//440-460	1;8;27
		1000//1200	280S/M	E04512XT3YAX280SMF3W	$24,345	XD	1910	1	82.2	94	44.705	380-415/660-690//440-460	1;8;27

continued on next page

Please refer to inside back cover for description of "NOTES"

For detailed specifications, data sheets, drawings and performance curves visit http:// www.weg.net

Data subject to change without notice.

TEFC – Ex db - IE3 - *continued*

HP	kW	RPM	Frame	Catalog Number	List Price	Mult. Symbol	Approx. Shipping Weight (lbs)	Service Factor	FL Amps @ High	FL. Eff (%)	"C" Dimension (in)	Voltage (V)	Notes
75	55	3000//3600	250S/M	E05536XT3YAX250SMF3W	$24,417	XD	1270	1	95.4	94.4	39.724	380-415/660-690//440-460	1;8;27
		1500//1800	250S/M	E05518XT3YAX250SMF3W	$21,508	XD	1380	1	97.5	94.6	39.724	380-415/660-690//440-460	1;8;27
		1000//1200	280S/M	E05512XT3YAX280SMF3W	$30,872	XD	2007	1	100	94.3	44.705	380-415/660-690//440-460	1;8;27
100	75	3000//3600	280S/M	E07536XT3YAX280SMF3W	$34,180	XD	1910	1	126	94.9	44.705	380-415/660-690//440-460	1;8;27
		1500//1800	280S/M	E07518XT3YAX280SMF3W	$27,104	XD	2040	1	134	95.2	44.705	380-415/660-690//440-460	1;8;27
		1000//1200	315S/M	E07512XT3YAX315SMF3W	$35,180	XD	2518	1	137	95	51.654	380-415/660-690//440-460	1;8;27
125	90	3000//3600	280S/M	E09036XT3YAX280SMF3W	$40,751	XD	2040	1	149	95.2	44.705	380-415/660-690//440-460	1;8;27
		1500//1800	280S/M	E09018XT3YAX280SMF3W	$37,526	XD	2137	1	158	95.4	44.705	380-415/660-690//440-460	1;8;27
		1000//1200	315S/M	E09012XT3YAX315SMF3W	$45,340	XD	2743	1	162	95.2	51.654	380-415/660-690//440-460	1;8;27
150	110	3000//3600	315S/M	E11036XT3YAX315SMF3W	$48,322	XD	2443	1	187	95.4	50.472	380-415/660-690//440-460	1;8;27
		1500//1800	315S/M	E11018XT3YAX315SMF3W	$42,766	XD	2593	1	189	95.5	51.654	380-415/660-690//440-460	1;8;27
		1000//1200	315S/M	E11012XT3YAX315SMF3W	$54,984	XD	2893	1	196	95.1	51.654	380-415/660-690//440-460	1;8;27
175	132	3000//3600	315S/M	E13236XT3YAX315SMF3W	$61,092	XD	2593	1	218	95.6	50.472	380-415/660-690//440-460	1;8;27
		1500//1800	315S/M	E13218XT3YAX315SMF3W	$51,911	XD	2781	1	226	95.6	51.654	380-415/660-690//440-460	1;8;27
		1000//1200	315S/M	E13212XT3YAX315SMF3W	$93,051	XD	3118	1	240	95.6	51.654	380-415/660-690//440-460	1;8;27
220	160	3000//3600	315S/M	E16036XT3YAX315SMF3W	$76,056	XD	2743	1	264	95.8	50.472	380-415/660-690//440-460	1;8;27
		1500//1800	315S/M	E16018XT3YAX315SMF3W	$56,646	XD	2968	1	273	95.8	51.654	380-415/660-690//440-460	1;8;27
		1000//1200	315L	E16012XT3YAX315LF3-W	$101,880	XD	3473	1	287	95.8	55.984	380-415/660-690//440-460	1;8;27
270	200	3000//3600	315L	E20036XT3YAX315LF3-W	$114,087	XD	3058	1	326	95.8	54.803	380-415/660-690//440-460	1;8;27
		1500//1800	315L	E20018XT3YAX315LF3-W	$91,423	XD	3303	1	333	96.1	55.984	380-415/660-690//440-460	1;8;27
		1000//1200	355M/L	E20012XT3YAX355MLF3W	$124,447	XD	4567	1	367	95.9	61.358	380-415/660-690//440-460	1;8;27
340	250	3000//3600	315L	E25036XT3YAX315LF3-W	$125,854	XD	3477	1	398	96	54.803	380-415/660-690//440-460	1;8;27
		1500//1800	315L	E25018XT3YAX315LF3-W	$107,240	XD	3616	1	424	96.4	55.984	380-415/660-690//440-460	1;8;27
		1000//1200	355M/L	E25012XT3YAX355MLF3W	$150,638	XD	5263	1	464	96	61.358	380-415/660-690//440-460	1;8;27
430	315	1500//1800	355M/L	E31518XT3YAX355MLF3W	$122,650	XD	4939	1	543	96	61.358	380-415/660-690//440-460	1;8;27

Farm Duty Motors

TEFC – Single-Phase – General Purpose – Foot Mount A-272
TEFC – Single-Phase – General Purpose –C-Face - Foot Mount A-273
TEFC – Single-Phase – General Purpose –C-Face - Footless A-273
TEFC – Single-Phase – Auger Drive – Footless A-274
TEAO – Single-Phase – Poultry Fan – Foot Mount A-274
TEAO – Single-Phase – Poultry Fan – Resilient Base A-274
PSC Direct Drive A-274
TEAO – Three-Phase – Grain Dryer/Vane Axial Fan A-275
TEAO – Single-Phase – Grain Dryer A-275
TEAO – Single-Phase – Aeration Fan A-275
TEAO – Three-Phase – Aeration Fan A-275
TEFC – Three Phase – Grain Dryer for Centrifugal Fans A-276
TEFC – Single Phase – Grain Dryer for Centrifugal Fans A-276
ODP – Three Phase – Grain Dryer for Centrifugal Fans A-276
ODP – Single Phase – Grain Dryer for Centrifugal Fans A-276
TEFC – Single-Phase – C-Face – Foot Mount – Irrigation Duty A-277
TEFC – Three-Phase – C-Face – Foot Mount – Irrigation Duty A-277
Irrigation Drive Motors A-278
Jet End Booster Pump Motors A-278

Farm Duty Motors

WEG offers a complete line of TEFC Farm Duty motors providing high starting torque for the most demanding applications. Standard features such as v-rings provide versatility for indoor and outdoor applications. Overload protection available in all frames protects the motor from extreme overloads and offers maximum safety to operators.

Rolled Steel

General Purpose - TEFC

- Double shielded ball bearings
- Insulation class F with class B temperature rise
- Start and run capacitor on 1.5 HP and up
- High starting Torque
- Manual Reset Thermal Overload Protector

Cast Iron

Auger Drive - TEFC

- Double shielded ball bearings
- Two bolts mounting NEMA ‘N’ flange
- Extended shaft (NDE) with wrench flat for manual jogging of auger
- Centrifugal start switch protected against auger drive overspeed
- Manual Reset Thermal Overload Protector

Auger Drive

Poultry Fan - TEAO

- Double shielded ball bearings
- Insulation class B
- Automatic Reset Thermal Overload Protector

Poultry Fan

Farm Duty, Single-Phase, TEFC

- Double shielded ball bearings
- Insulation class F with class B temperature rise
- Start and run capacitor on 1.5 HP and up
- High and Extra High Starting Torque
- Manual Reset Thermal Overload Protector

TEFC – Single-Phase – General Purpose – Foot Mount

HP	kW	RPM	Frame	Catalog Number	List Price	Mult. Symbol	Approx. Shipping Weight (lbs)	Serice Factor	FL Amps @ High	FL. Eff (%)	"C" Dimension (in)	Voltage (V)	Notes
0.33	0.25	1800	W56	**.3318ES1RFDW56-S**	**$284**	R1	22	1.15	3.00	61.0	11.500	115/230	4;9
0.5	0.37	1800	W56	**.5018ES1RFDW56-S**	**$308**	R1	25	1.15	4.00	64.0	11.894	115/230	4;9
0.75	0.55	1800	56	**.7518ES1RFD56-S**	**$357**	R1	34	1.15	5.30	68.5	13.114	115/230	4;9
1	0.75	1800	56	**00118ES1RFD56-S**	**$394**	R1	40	1.15	6.80	71.0	13.902	115/230	4;9
		1800	143/5T	**00118ES1RFD143T-S**	**$400**	R1	40	1.15	6.80	71.0	13.969	115/230	4;9
1.5	1.1	1800	56H	**00158ES1RFD56H-S**	**$502**	R1	51	1.15	7.48	77.0	15.083	115/230	4;9
		1800	143/5T	**00158ES1RFD145T-S**	**$504**	R1	50	1.15	7.48	77.0	15.152	115/230	4;9
2	1.5	1800	56H	**00218ES1RFD56H-S**	**$529**	R1	56	1.15	10.0	78.5	15.870	115/230	4;9
		1800	143/5T	**00218ES1RFD145T-S**	**$578**	R1	57	1.15	10.0	78.5	15.938	115/230	4;9
		1800	182/4T	**00218ES1RFD184T-S**	**$790**	R1	90	1.15	9.96	77.0	19.094	230	4;9
		1800	182/4T	**00218ES1RFD182T-W22**	**$790**	R1	97	1.15	8.40	80.0	17.012	115/230	4;39
3	2.2	1800	182/4T	**00318ES1DFD182T-S**	**$915**	R1	100	1.15	11.9	78.5	19.094	230	4;9
		1800	182/4T	**00318ES1DFD184T-W22**	**$915**	R1	104	1.15	13.8	77.0	17.012	230	4;39
5	3.7	1800	182/4T	**00518ES1DFD184T-S**	**$1,074**	R1	112	1.15	19.9	84.0	19.882	230	4;9
		1800	213/5T	**00518ES1DFD215T-S**	**$1,205**	R1	156	1.15	20.2	84.0	22.441	230	4;9
		1800	182/4T	**00518ES1DFD184T-W22**	**$1,074**	R1	117	1.15	21.4	80.0	17.012	230	4;39
		1800	213/5T	**00518ES1DFD215T-W22**	**$1,205**	R1	157	1.15	21.3	80.5	19.462	230	4;39
		1800	213/5TZ	**00518ES1DFD215Z-W22**	**$1,205**	R1	146	1.15	21.3	80.5	19.462	230	4;39
7.5	5.5	1800	213/5T	**00718ES1DFD213T-S**	**$1,463**	R1	172	1.15	28.8	85.5	22.441	230	4;9
		1800	213/5T	**00718ES1DFD215T-W22**	**$1,463**	R1	176	1.15	31.7	83.0	19.462	230	4;39
		1800	213/5TZ	**00718ES1DFD215Z-W22**	**$1,463**	R1	176	1.15	31.7	83.0	19.462	230	4;39
10	7.5	1800	213/5T	**01018ES1DFD215T-S**	**$1,692**	R1	179	1.15	39.1	85.0	22.441	230	4;9
		1800	213/5T	**01018ES1DFD215T-W22**	**$1,692**	R1	194	1.15	40.9	84.0	19.462	230	4;39
12.5	9.2	1800	213/5T	**01218ES1DFD215T-W22**	**$1,889**	R1	205	1.15	54.5	82.5	19.462	230	4;39

Please refer to inside back cover for description of "NOTES"

For detailed specifications, data sheets, drawings and performance curves visit http://www.weg.net

Data subject to change without notice.

TEFC – Single-Phase – General Purpose –C-Face - Foot Mount

HP	kW	RPM	Frame	Catalog Number	List Price	Mult. Symbol	Approx. Shipping Weight (lbs)	Service Factor	FL Amps @ High	FL Eff (%)	"C" Dimension (in)	Voltage (V)	Notes
0.5	0.37	1800	W56	**.5018ES1RFDW56C-S**	**354**	R1	10	1.15	4	64	11.894	115/230V	4,9
1	0.75	1800	56	**00118ES1RFD56C-S**	**453**	R1	15	1.15	6.8	71	13.902	115/230V	4,9
1.5	1.1	1800	143/5T	**00158ES1RFDR145TC-S**	**580**	R1	23	1.15	7.48	77	15.157	115/230V	4,9
2	1.5	1800	143/5T	**00218ES1RFD145TC-S**	**665**	R1	21	1.15	10	78.5	15.941	115/230V	4,9
2	1.5	1800	56H	**00218ES1RFD56HC-S**	**608**	R1	27	1.15	10	78.5	15.854	115/230V	4,9
3	2.2	1800	182/4T	**00318ES1DFD182TC-S**	**1052**	R1	43	1.15	11.9	78.5	19.094	230V	4,9
5	3.7	1800	182/4T	**00518ES1DFD184TC-S**	**1235**	R1	46	1.15	19.9	84	20.240	230V	4,9
7.5	5.5	1800	213/5T	**00718ES1DFD213TC-S**	**1682**	R1	74	1.15	28.8	85.5	22.441	230V	4,9
10	7.5	1800	213/5T	**01018ES1DFD215TC-S**	**1946**	R1	86	1.15	39.1	85	22.441	230V	4,9

TEFC – Single-Phase – General Purpose –C-Face - Footless

HP	kW	RPM	Frame	Catalog Number	List Price	Mult. Symbol	Approx. Shipping Weight (lbs)	Service Factor	FL Amps @ High	FL Eff (%)	"C" Dimension (in)	Voltage (V)	Notes
0.5	0.37	1800	W56	**.5018ES1RFDW56CFL-S**	**339**	R1	10	1.15	4	64	11.894	115/230V	4,9
1	0.75	1800	56	**00118ES1RFD56CFL-S**	**428**	R1	18	1.15	6.8	71	13.886	115/230V	4,9
2	1.5	1800	143/5T	**00218ES1RFDR145TC-S**	**635**	R1	21	1.15	10	78.5	15.945	115/230V	4,9
2	1.5	1800	56	**00218ES1RFD56CFL-S**	**611**	R1	25	1.15	10	78.5	15.854	115/230V	4,9

4) Manual Reset Thermal Overload Protector

9) Rolled Still Frame - Cannot be modified with T-box on opposite side

TEFC – Single-Phase – Auger Drive – Footless

HP	kW	RPM	Frame	Catalog Number	List Price	Mult. Symbol	Approx. Shipping Weight (lbs)	Service Factor	FL Amps @ High	FL Eff (%)	"C" Dimension (in)	Voltage (V)	Notes
0.33	0.25	1800	56YZ	**.3318ES1RAD56NZ-S**	**$363**	A1	22	1.15	3.00	60%	12.785	115/230	4
0.5	0.37	1800	56YZ	**.5018ES1RAD56NZ-S**	**$409**	A1	31	1.15	3.50	68%	13.572	115/230	4
0.75	0.55	1800	56YZ	**.7518ES1RAD56NZ-S**	**$447**	A1	34	1.15	3.50	74%	13.572	115/230	4
		1800	56Y	**.7518ES1RAD56N-S**	**$464**	A1	34	1.15	3.50	74%	16.660	115/230	4
		3600	56YZ	**.7536ES1RAD56NZ-S**	**$470**	A1	33	1.15	3.63	68%	12.593	230	4
1	0.75	1800	56Y	**00118ES1RAD56N-S**	**$481**	A1	35	1.15	4.64	76%	14.640	115/230	4
1.5	1.1	1800	56Y	**00158ES1RAD56N-S**	**$597**	A1	43	1.15	6.50	77%	15.427	115/230	4

TEAO – Single-Phase – Poultry Fan – Foot Mount

HP	kW	RPM	Frame	Catalog Number	List Price	Mult. Symbol	Approx. Shipping Weight (lbs)	Service Factor	FL Amps @ High	FL Eff (%)	"C" Dimension (in)	Voltage (V)	Notes
0.33	0.25	1800	48	**.3318AS1BPF48-S**	**$311**	G1	22	1.25	2.76	61.5	10.157	115/208-230	3;9;16
0.5	0.37	1800	W56	**.5018AS1BPFW56-S**	**$336**	G1	27	1.25	4.20	65.0	11.102	115/208-230	3;9;16
0.75	0.55	1800	56	**.7518AS1BPF56-S**	**$385**	G1	26	1.25	5.30	68.5	11.496	115/208-230	3;9
1	0.75	1800	56	**00118AS1BPF56-S**	**$410**	G1	35	1.15	7.00	72.0	12.992	115/208-230	3;9
	0.75	1800	56	**00118AS1BPFH56-S**	**$445**	G1	32	1.40	6.20	73.0	13.464	115/208-230	3;9
1.5	1.10	1800	56	**00158AS1BPF56-S**	**$458**	G1	33	1.15	7.48	77.0	13.464	115/208-230	3;9
	1.10	1800	56	**00158AS1BPFH56-S**	**$484**	G1	34	1.30	8.74	76.0	13.858	115/208-230	3;9
2	1.5	1800	143/5T	**00218AS1BPF145T-S**	**$548**	G1	54	1.15	10.0	78.5	14.516	115/208-230	3;9

TEAO – Single-Phase – Poultry Fan – Resilient Base

HP	kW	RPM	Frame	Catalog Number	List Price	Mult. Symbol	Approx. Shipping Weight (lbs)	Service Factor	FL Amps @ High	FL. Eff (%)	"C" Dimension (in)	Voltage (V)	Notes
0.33	0.25	1800	48	**.3318AS1BRBPF48-S**	**$325**	G1	20	1.25	2.76	61.5	10.157	115/208-230	3;9;16
0.5	0.37	1800	W56	**.5018AS1BRBPFW56-S**	**$350**	G1	21	1.25	3.48	66.0	11.318	115/208-230	3;9;16
0.75	0.55	1800	56	**.7518AS1BRBPF56-S**	**$400**	G1	26	1.25	5.63	68.5	12.008	115/208-230	3;9
1	0.75	1800	56	**00118AS1BRBPF56-S**	**$435**	G1	35	1.15	7.00	72.0	12.992	115/208-230	3;9
1.5	1.10	1800	56	**00158AS1BRBPF56-S**	**$477**	G1	35	1.15	7.48	77	13.976	115/208-230	3;9

PSC Direct Drive Fan Motors - Single Phase - TEAO - Extended Through-Bolts

HP	kW	RPM	Frame	Catalog Number	List Price	Mult. Symbol	Approx. Shipping Weight (lbs)	Service Factor	FL Amps @ High	FL. Eff (%)	"C" Dimension (in)	Voltage (V)	Notes
0.33	0.25	1800	48Z	**.3318AS1BPFPC48Z-S**	**$287**	G1	20	1.25	1.83	62	10.554	115/208-230	3;9
		1200	48Z	**.3312AS1BPFPC48Z-S**	**$322**	G1	22	1.25	1.88	61	11.735	115/208-230	3;9

Please refer to inside back cover for description of "NOTES"

For detailed specifications, data sheets, drawings and performance curves visit http://www.weg.net

Data subject to change without notice.

TEAO – Three-Phase – Grain Dryer/Vane Axial Fan

HP	kW	RPM	Frame	Catalog Number	List Price	Mult. Symbol	Approx. Shipping Weight (lbs)	Service Factor	FL Amps @ High	FL. Eff (%)	"C" Dimension (in)	Voltage (V)	Notes
1.5-3	1.1-2.2	3600	143/5TZ	**00336AP3EGD145TZ-S**	**$750**	GD3	39	1.00	2.41	79.7	12.795	230/460	1;9;38
3-4.5	2.2-3.4	3600	143/5TZ	**00456AP3EGD145TZ-S**	**$795**	GD3	45	1.00	4.01	83.8	13.582	230/460	1;9;38
		3600	182/4Z	**00456AP3EGD182Z-S**	**$827**	GD3	59	1.00	4.27	86.2	14.601	230/460	1;9;38
5-7.5	3.7-5.5	3600	182/4TZ	**00736AP3EGD184TZ-S**	**$933**	GD3	71	1.00	6.45	87.8	16.282	230/460	1;9;38
7.5-10	5.5-7.5	3600	182/4TZ	**01036AP3EGD184TZ-S**	**$1,123**	GD3	89	1.00	9.04	89.8	17.07	230/460	1;9;38
10-15	7.5-11	3600	213/5TZ	**01536AP3EGD215TZ-S**	**$1,408**	GD3	139	1.00	12.20	92.5	19.094	230/460	1;9;38

TEAO - Single-Phase - Grain Dryer

HP	RPM	NEMA Frame	Catalog Number	List Price	Mult. Symbol	FL Amps @ High	FL. Eff. (%)	"C" Dimension (in)	Voltage (V)	Notes
1.5-3	3600	145TZ	**00336AP1DGD145TZ-S**	**$910**	GD1	7.51	73.2	13.555	230	1,9;38
3-4.5	3600	145TZ	**00456AP1DGD145TZ-S**	**$1,025**	GD1	11.8	82.4	15.130	230	1,9;38
5-7.5	3600	182TZ	**00736AP1DGD182TZ-S**	**$1,296**	GD1	19.8	82.9	17.087	230	1,9;38
7.5-10	3600	182TZ	**01036AP1DGD182TZ-S**	**$1,338**	GD1	27.2	87.8	17.858	230	1,9;38
10-15	3600	215TZ	**01536AP1DGD215TZ-S**	**$2,024**	GD1	37.8	88.0	19.720	230	1,9;38

TEAO – Single-Phase – Aeration Fan

HP	kW	RPM	Frame	Catalog Number	List Price	Mult. Symbol	Approx. Shipping Weight (lbs)	Service Factor	FL Amps @ High	FL. Eff (%)	"C" Dimension (in)	Voltage (V)	Notes
0.75	0.55	3600	56Z	**.7536AS1RAF56Z-S**	**$395**	R1	27	1.15	4.00	66.0	11.201	115/230	3;9;38
1	0.75	3600	56Z	**00136AS1RAF56Z-S**	**$459**	R1	31	1.15	5.10	70.0	11.594	115/230	3;9;38
1.5	1.1	3600	56Z	**00156AS1RAF56Z-S**	**$601**	R1	36	1.15	6.60	75.0	12.382	115/230	3;9;38
		3600	143/5TZ	**00156AS1RAF143TZ-S**	**$643**	R1	41	1.15	6.60	75.0	12.413	115/230	3;9;38
2	1.5	3600	143/5TZ	**00236AS1RAF143TZ-S**	**$783**	R1	46	1.15	8.70	77.0	12.807	115/230	3;9;38
3	2.2	3600	143/5TZ	**00336AS1RAF145TZ-S**	**$818**	R1	53	1.15	12.7	80.0	13.988	115/230	3;9;38

TEAO – Three-Phase – Aeration Fan

HP	kW	RPM	Frame	Catalog Number	List Price	Mult. Symbol	Approx. Shipping Weight (lbs)	Service Factor	FL Amps @ High	FL. Eff (%)	"C" Dimension (in)	Voltage (V)	Notes
0.75	0.55	3600	56Z	**.7536AS3EAF56Z-S**	**$402**	R1	23	1.25	1.13	72.0	10.380	208-230/460	9;38
1	0.75	3600	56Z	**00136AS3EAF56Z-S**	**$435**	R1	26	1.25	1.51	74.0	10.380	208-230/460	9;38
1.5	1.1	3600	143/5TZ	**00156AP3EAF143TZ-S**	**$498**	R1	33	1.15	1.90	82.5	11.624	230/460	9;38
2	1.5	3600	143/5TZ	**00236AP3EAF143TZ-S**	**$578**	R1	38	1.15	2.55	82.5	12.018	230/460	9;38
3	2.2	3600	143/5TZ	**00336AP3EAF145TZ-S**	**$659**	R1	45	1.15	3.55	85.5	12.805	230/460	9;38

Please refer to inside back cover for description of "NOTES"

For detailed specifications, data sheets, drawings and performance curves visit http://www.weg.net

Grain Dryer for Centrifugal Fan

- Shaft length 1” longer than NEMA standard
- Lubed for life double sealed ball bearings
- Lip seal and slinger
- Roedent screen for ODP
- IP55 for TEFC, IP21 of ODP
- Single phase units include NC Thermostat

TEFC - Three Phase - Grain Dryer for Centrifugal Fans

HP	RPM	NEMA Frame	Catalog Number	List Price	Mult. Symbol	Approx. Shipping Weight (lbs)	Service Factor	FL Amps @ High	FL. Eff. (%)	“C” Dimension (in)	Voltage (V)	Notes
5	1800	182/4T	00518ET3EGD184TZ-S	$925	GD3	76.1	1.15	6.49	89.5	16.913	208-230/460	9
7.5	1800	182/4T	00718ET3EGD184TZ-S	$1,105	GD3	121	1.15	9.18	91.7	19.897	208-230/460	9
10	1800	213/5T	01018ET3EGD215TZ-S	$1,255	GD3	127	1.15	12.2	91.7	20.291	208-230/460	9
15	1800	254/6T	01518ET3EGD254TZ-S	$1,600	GD3	211	1.15	18.2	92.4	23.559	208-230/460	9

TEFC - Single Phase - Grain Dryer for Centrifugal Fans

HP	RPM	NEMA Frame	Catalog Number	List Price	Mult. Symbol	Approx. Shipping Weight (lbs)	Service Factor	FL Amps @ High	FL. Eff. (%)	“C” Dimension (in)	Voltage (V)	Notes
10	1800	213/5T	01018ES1DGD215TZ-S	$2,040	GD1	205	1.25	39.5	86	23.441	230	4,9
10	1800	213/5T	01018ES1DGD215TZ-W22	$2,040	GD1	230	1.15	40.9	84	20.488	230	4

ODP - Three Phase - Grain Dryer for Centrifugal Fans

HP	RPM	NEMA Frame	Catalog Number	List Price	Mult. Symbol	Approx. Shipping Weight (lbs)	Service Factor	FL Amps @ High	FL. Eff. (%)	“C” Dimension (in)	Voltage (V)	Notes
5	1800	182/4T	00518OT3EGD184TZ-S	$840	GD3	81.8	1.15	6.33	89.5	17.339	208-230/460	9
7.5	1800	182/4T	00718OT3EGD213TZ-S	$1,090	GD3	116	1.15	9.25	91.0	17.181	208-230/460	9
10	1800	213/5T	01018OT3EGD215TZ-S	$1,220	GD3	121	1.15	12.4	91.7	17.181	208-230/460	9
15	1800	254/6T	01518OT3EGD254TZ-S	$1,550	GD3	189	1.15	18.6	93.0	20.482	208-230/460	9

ODP - Single Phase - Grain Dryer for Centrifugal Fans

HP	RPM	NEMA Frame	Catalog Number	List Price	Mult. Symbol	FL Amps @ High	Approx. Shipping Weight (lbs)	Service Factor	FL. Eff. (%)	“C”Dim. (in)	Voltage (V)	Notes
5	1800	182/4T	00518OS1DGD184TZ-S	$1,205	GD1	88	1.00	9.87	84.0	18.520	230	9
7.5	1800	182/4T	00718OS1DGD213TZ-S	$1,595	GD1	120	1.00	14.3	85.5	19.976	230	9
10	1800	213/5T	01018OS1DGD215TZ-S	$1,980	GD1	216	1.00	19.2	86.5	20.370	230	9
16	1800	254/6T	01618OS1DGD256TZ-S	$3,495	GD1	59.2	265	1.00	89.9	23.057	230	8,9

Please refer to inside back cover for description of “NOTES”

For detailed specifications, data sheets, drawings and performance curves visit http://www.weg.net

Data subject to change without notice.

IRRIGATION DUTY MOTORS

TEFC

High Starting Torque makes these motors ideal for a wide range of applications.

Feature that makes a difference:

- Constructed with Metal Fan

Standard Features:

- Shielded Ball bearings
- Class F insulation (impregnation resin and magnet wire are class H)
- Gasketed Conduit Box

TEFC – Single-Phase – C-Face – Foot Mount

HP	kW	RPM	Frame	Catalog Number	List Price	Mult. Symbol	Approx. Shipping Weight (lbs)	Service Factor	FL Amps @ High	FL. Eff (%)	"C" Dimension (in)	Voltage (V)	Notes
5	3.7	1800	182/4TC	**00518ES1EID184TC-W22**	**$1,153**	W1	121	1.15	10.7	80.0	17.012	208-230/460	11
7.5	5.5	1800	213/5TC	**00718ES1EID215TC-W22**	**$1,471**	W1	179	1.15	15.0	83.0	19.462	208-230/460	11
10	7.5	1800	213/5TC	**01018ES1EID215TC-W22**	**$1,694**	W1	196	1.15	20.4	84.0	19.462	208-230/460	11
12.5	9.2	1800	213/5TC	**01218ES1EID215TC-W22**	**$1,888**	W1	209	1.15	27.2	82.5	19.462	208-230/460	11

W22 - Cast Iron

Feature that makes a difference:

- Constructed with Metal Fan

Standard Features:

- 50/60 Hz rated (380V on nameplate - 400/415V available)
- Rated 50Hz at same horsepower 1.0 Service Factor
- Class F insulation (impregnation resin and magnet wire are class H)
- F1 mount (field convertible to F2)
- Regreasable ball bearings (frames 254T and up)
- Gasketed conduit box

TEFC – Three-Phase – C-Face – Foot Mount

HP	kW	RPM	Frame	Catalog Number	List Price	Mult. Symbol	Approx. Shipping Weight (lbs)	Service Factor	FL Amps @ High	FL. Eff (%)	"C" Dimension (in)	Voltage (V)	Notes
5	3.7	1800	182/4TC	**00518ET3EID184TC-W22**	**$860**	N1	110	1.25	6.45	89.5	15.860	230/460	11
7.5	5.5	1800	213/5TC	**00718ET3EID213TC-W22**	**$1,202**	N1	180	1.25	9.18	91.7	19.517	230/460	11
10	7.5	1800	213/5TC	**01018ET3EID215TC-W22**	**$1,386**	N1	194	1.25	12.4	91.7	19.517	230/460	11
15	11	1800	254/6TC	**01518ET3EID254TC-W22**	**$1,996**	N1	353	1.25	18.0	92.4	24.945	230/460	11
20	15	1800	254/6TC	**02018ET3EID256TC-W22**	**$2,349**	N1	403	1.25	24.1	93.0	24.945	230/460	11
25	18.5	1800	284/6TC	**02518ET3EID284TC-W22**	**$2,947**	N1	451	1.25	29.5	93.6	27.929	230/460	11;51

Please refer to inside back cover for description of "NOTES"

For detailed specifications, data sheets, drawings and performance curves visit http://www.weg.net

IRRIGATION DUTY MOTORS

Irrigation Drive Motors

These drive motors for center pivot and linear travel irrigation towers have been used on OEM equipment for decades. Its unique design offers a stainless steel rain shield for extra protection against water and other elements typically present in an agricultural environment. These motors are rated for 50°C ambient, making it the best for this application. Also featuring double sealed ball bearings, an automatic reset thermal overload protector, corrosion resistant phosphate shaft coating and a gasketed conduit box.

HP	kW	RPM	Frame	Catalog Number	List Price	Mult. Symbol	Approx. Shipping Weight (lbs)	Service Factor	FL Amps @ High	FL. Eff (%)	"C" Dimension (in)	Voltage (V)	Notes
1	.75	1800	56C	00118ET3QID56C	$680	A1	35	1	1.57	85.5	14.11	460//380-415	3,42,45
1.5	1.1	1800	56C	00158ET3QID56C	$695	A1	38	1	2.13	85.5	14.11	460//380-415	3,42,45

Jet End Booster Pump Motor

The Jet End Booster Pump Motor is perfect for irrigation systems. The solution includes a stainless steel rain shield and canopy for vertical application, a fully gasketed conduit box, an automatic reset thermal overload protection, and stainless steel shaft end.

HP	kW	RPM	Frame	Catalog Number	List Price	Mult. Symbol	Approx. Shipping Weight (lbs)	Service Factor	FL Amps @ High	FL. Eff (%)	"C" Dimension (in)	Voltage (V)	Notes
2	1.5	3600	56J	00236ET3QID56J	$725	A1	43	1.5	2.8	85.5	14.65	460//380-415	3,15
2	1.5	3600	56CZ	00236ET3QID56Z	$730	A1	43	1.5	2.9	85.5	14.93	460//380-415	3,15,46

Please refer to inside back cover for description of "NOTES"

For detailed specifications, data sheets, drawings and performance curves visit http://www.weg.net

Data subject to change without notice.

VECTOR DUTY MOTORS

TENV – Three-Phase – Foot Mount – Double C-Face A-280

OIL WELL PUMPING – TEFC

TEFC – Three-Phase – NEMA Design 'D' A-282

COMPRESSOR DUTY MOTORS

ODP – Single-Phase – Foot Mount A-284

ODP – Three-Phase – Foot Mount – NEMA Premium® A-284

INSTANT REVERSE - SINGLE PHASE MOTORS

ODP – C-Face – Footless A-285

ODP – Resilient Base A-285

REFRIGERATION MOTORS

Foot Mount A-287

Foot Mount – RFVFD Models with Aegis Rings A-287

Foot Mount – C-Face A-287

HYDRAULIC PUMP MOTORS

TEFC – Three-Phase – SAE-A – High Efficiency A-288

BRAKE MOTORS

TEFC – Foot Mount – Cast Iron A-290

TEFC – Foot Mount – Rolled Steel A-292

TEFC – C-Face – Foot Mount – Rolled Steel A-293

TEFC – C-Face – Footless – Rolled Steel A-293

SAW ARBOR MOTORS

TEFC – Three-Phase – Right-Hand Thread A-294

TEFC – Three-Phase – Left-Hand Thread A-294

SOOT BLOWER MOTORS

TEFC – C-Face – Footless A-295

WATER COOLED MOTORS

TEWC - Three-Phase - Foot Mount A-297

Definite Purpose Motors

VECTOR DUTY MOTORS

TENV - Three-Phase - Foot Mount - Double C-Face

Designed specifically for inverter operation for applications requiring 1000:1 constant torque turndown ratio

- Class H insulation with Spike resistant Magnet wire and Class F Rise
- NEMA design B
- F1 Mounted (F2 convertible)
- Stainless Steel Nameplate - Laser etched with high contrast background
- Gasketed conduit box

Features that make a difference:

- Constant torque operation from 0 to base speed (1000:1) on PWM Vector Drive
- Constant Horsepower operation up to 150% base speed
- Ready for encoder mount
- With thermostats (1 per phase)
- Special nameplate data for easy drive set-up
- Ready for C-face brake, limited to 10 lb-ft braking torque

Inverter Rated:
1000 : 1 for constant torque

TENV - Foot Mount - Double C-Face

HP	kW	RPM	Frame	Catalog Number	List Price	Mult. Symbol	Approx. Shipping Weight (lbs)	Service Factor	FL Amps @ High	FL. Eff (%)	"C" Dimension (in)	Voltage (V)	Notes
0.33	0.25	1800	56CZ	.3318NT3FVD56C-S	$555	F1	31.56	1.00	.744	74	12.819	230/460	17
0.5	0.37	1800	56	.5018NT3FVD56C-S	$599	F1	28	1.00	1.00	78.5	10.803	230/460	17
0.75	0.55	1800	56	.7518NT3FVD56C-S	$636	F1	31	1.00	1.3	81.5	11.197	230/460	17
1	0.75	1800	56	00118NT3FVD56C-S	$681	F1	38	1.00	1.5	85.5	14.788	230/460	17
		1800	143/5TC	00118NT3FVD143TC-W22	$697	D1	51	1.00	1.41	85.5	14.678	230/460	17;19
		1800	143/5TC	00118NT3HVD143TC-W22	$697	D1	55	1.00	1.13	85.5	14.678	575	17;19
1.5	1.1	1800	56CZ	00158NT3FVD56C-S	$720	F1	45.06	1.00	2.28	86.5	14.788	230/460	17
		1800	143/5TC	00158NT3FVD145TC-W22	$705	D1	60	1.00	2.00	86.5	14.678	230/460	17;19
		1800	143/5TC	00158NT3HVD145TC-W22	$705	D1	55	1.00	1.66	86.5	14.678	575	17;19
2	1.5	1800	143/5TC	00218NT3FVD145TC-W22	$928	D1	62	1.00	2.65	86.5	14.678	230/460	17;19
		1800	143/5TC	00218NT3HVD145TC-W22	$928	D1	62	1.00	2.12	96.5	14.678	575	17;19
3	2.2	1800	182/4TC	00318NT3FVD182TC-W22	$1,150	D1	107	1.00	3.91	89.5	16.569	230/460	17;19
		1800	182/4TC	00318NT3HVD182TC-W22	$1,150	D1	91	1.00	3.12	89.5	16.569	575	17;19
5	3.7	1800	182/4TC	00518NT3FVD184TC-W22	$1,373	D1	116	1.00	7.11	89.5	16.569	230/460	17;19;37
		1800	182/4TC	00518NT3HVD184TC-W22	$1,373	D1	110	1.00	5.70	89.5	16.569	575	17;19;37
7.5	5.5	1800	213/5TC	00718NT3FVD213TC-W22	$1,803	D1	173	1.00	9.07	91.7	20.041	230/460	17;19
		1800	213/5TC	00718NT3HVD213TC-W22	$1,803	D1	169	1.00	7.30	91.7	20.041	575	17;19
10	7.5	1800	213/5TC	01018NT3FVD215TC-W22	$2,157	D1	207	1.00	13.3	91.7	20.041	230/460	17;19;37
		1800	213/5TC	01018NT3HVD215TC-W22	$2,157	D1	192	1.00	10.0	91.7	20.041	575	17;19;37
15	11	1800	254/6TC	01518NT3FVD254TC-W22	$2,567	D1	365	1.00	19.4	92.4	25.569	230/460	17;19
		1800	254/6TC	01518NT3HVD254TC-W22	$2,567	D1	333	1.00	14.2	92.4	25.569	575	17;19
20	15	1800	254/6TC	02018NT3FVD256TC-W22	$3,747	D1	398	1.00	26.6	93.0	25.569	230/460	17;19;37
		1800	254/6TC	02018NT3HVD256TC-W22	$3,747	D1	362	1.00	20.2	93	25.569	575	17;19;37

Note: Flanged motors on Cast Iron frame sizes 143/5 to 254/6 have non-NEMA BA dimension. Refer to mechanical section of this catalog for details.

System Drive VFD AC Motors

1HP – 1500HP TEFC

The WEG Systems Drive VFD AC motor raises the bar for customers who demand the best. Benefits such as very high overload and expanded speed range capabilities increase the value of the product for many variable speed applications.

The designs are based on the W22 and H-Line Severe Duty motor platforms for outstanding reliability.

What makes this a Systems Drive Motor

- Constant torque capability to zero speed in standard NEMA frame size TEFC motor
- High torque designs for wide constant HP capability
- High short term overload capacities can exceed 200%
- 3 NC thermostats on winding
- Drive end shaft grounding available (standard 447T and larger)
- Insulated opposite drive end bearings available (standard 447T and larger)
- Very low noise
- Class I and Class II Division 2 up to 20:1CT to 449T frame (certification on larger ratings upon request)
- VFD rated insulation system exceeds requirements of NEMA MG1 Part 31 standard
- Custom designs for non-standard base speeds/frequencies (i.e. 600RPM base speed with 6-pole design) to replace many DC motor applications without gearing change

Features:

- 1000:1 Constant Torque
- Powerful
- Reliable
- Flexible

What makes this a WEG Motor

- Rugged FC200 high strength cast iron construction
- Paint system exceeds 200 hour salt spray test per ASTM B117
- PPLS – Positive Pressure Lubrication System
- All Silicon C4 coated lamination steel for reliability and repairability* – withstands burnout temperatures of 500C(935F) without loss of insulating properties. This allows the motor to be rewound back to the original efficiency
- Class F insulation system with mostly Class H components for long life
- Stainless steel nameplate

Please contact your authorized WEG distributor or go to www.**weg.net** for further information or additional specifications. **1-800-ASK-4WEG**

Definite Purpose Motors

OIL WELL PUMPING
TEFC

These special motors have the high slip and high torque that oil well beam pumping units demand.

TEFC

Standard Features:

- Regreasable Bearings (Frames 254T and up)
- NEMA design D (5-8% slip)
- Class F insulation (Impregnation Resin and magnet Wire are class H)
- F2 Mounted (Cast Iron frames are F1 convertible).
- Stainless Steel Nameplate - Laser etched with High contrast background (Cast Iron Frames only)
- Gasketed conduit box
- Class I, Div. 2, Groups A, B, C & D – T3, Class II, Div 2, Groups F & G – T3C

Features that make a difference:

- High starting and breakdown torque (NEMA Design D)
- Roller bearings for frames 404T and up

TEFC – Three-Phase – NEMA Design 'D'

HP	kW	RPM	Frame	Catalog Number	List Price	Mult. Symbol	Approx. Shipping Weight (lbs)	Service Factor	FL Amps @ High	FL. Eff (%)	"C" Dimension (in)	Voltage (V)	Notes
3	2.2	1200	213/5T	**00312ES3E0W215T-W22**	**$1,027**	P1E	147	1.15	4.98	74.0	19.517	208-230/460	7
5	3.7	1200	213/5T	**00512ES3E0W215T-W22**	**$1,170**	P1E	185	1.15	7.73	77.0	19.517	208-230/460	7;51
		900	254/6T	**00509ES3E0W256T-W22**	**$2,242**	P1E	301	1.15	7.27	77.0	24.945	208-230/460	7
7.5	5.5	1200	254/6T	**00712ES3E0W254T-W22**	**$1,688**	P1E	289	1.15	9.40	82.5	24.945	208-230/460	7
10	7.5	1200	254/6T	**01012ES3E0W256T-W22**	**$2,070**	P1E	346	1.15	12.7	82.5	24.945	208-230/460	7
		900	284/6T	**01009ES3E0W286T-W22**	**$3,437**	P1E	400	1.15	13.7	82.5	27.929	208-230/460	7,51
15	11	1200	284/6T	**01512ES3E0W284T-W22**	**$2,679**	P1E	447	1.15	18.3	85.5	27.929	208-230/460	7
		900	324/6T	**01509ES3E0W324T-W22**	**$4,293**	P1E	577	1.15	21.8	85.5	31.116	208-230/460	7
20	15	1200	284/6T	**02012ES3E0W286T-W22**	**$3,162**	P1E	488	1.15	24.2	86.5	27.929	208-230/460	7
		900	324/6T	**02009ES3E0W326T-W22**	**$4,872**	P1E	629	1.15	29.8	85.5	31.116	208-230/460	7
25	18.5	1200	324/6T	**02512ES3E0W324T-W22**	**$3,887**	P1E	598	1.15	31.2	88.5	31.116	208-230/460	7;51
30	22	1200	324/6T	**03012ES3E0W326T-W22**	**$4,515**	P1E	632	1.15	37.1	88.5	31.116	208-230/460	7
40	30	1200	364/5T	**04012ES3E0W365T-W22**	**$6,290**	P1E	1002	1.15	48.9	87.5	34.251	208-230/460	7
50	37	1200	404/5T	**05012ES3E0W404T-W22**	**$8,172**	P1E	1299	1.15	59.2	88.1	39.730	208-230/460	7;14
60	45	1200	404/5T	**06012ES3E0W405T-W22**	**$9,414**	P1E	1252	1.15	71.3	89.0	39.730	208-230/460	7;14
75	55	1200	444/5T	**07512ES3E0W444T-W22**	**$14,976**	P1E	1856	1.15	91.8	89.5	44.950	208-230/460	7;14
100	75	1200	444/5T	**10012ES3E0W445T-W22**	**$18,074**	P1E	2222	1.15	121	90.2	44.950	208-230/460	7;14

Definite Purpose Motors

COMPRESSOR DUTY MOTORS

ODP - Foot Mount

These high quality motors are designed to meet the high torque requirements of air compressor loads. Special electrical and mechanical design guarantees reliable service and longer motor life.

Single Phase

Three Phase

Single-Phase

- Class B insulation
- Start Capacitor
- Ball bearings
- Manual Reset Thermal Overload Protection
- High starting torque
- Rolled Steel frames have the base seam-welded to the frame for heavy duty use

Three-Phase

- Class F insulation (Impregnation Resin and Magnet wire are class H)
- Class B Rise at 1.15 Service Factor
- F1 Mounted (Cast Iron Frame motors are F2 convertible)
- Stainless Steel Nameplate - Laser etched with high contrast background (Cast Iron Frames only)
- Cast Iron Frames: Regreasable ball bearings
- Rolled Steel Frames: Permanently Lubricated ZZ ball bearings

ODP – Single-Phase – Foot Mount

HP	kW	RPM	Frame	Catalog Number	List Price	Mult. Symbol	Approx. Shipping Weight (lbs)	Service Factor	FL Amps @ High	FL. Eff (%)	"C" Dimension (in)	Voltage (V)	Notes
0.5	0.37	1800	W56	.50180S1BCDW56-S	$265	C1S	27.17	1	4.0 A	62	11.42	115/208-230 V	1;4;6;9
		3600	W56	.50360S1BCDW56-S	$224	C1S	20.94	1	3.67 A	60	10.24	115/208-230 V	1;4;6;9
0.75	0.55	1800	56	.75180S1BCD56-S	$310	C1S	29.05	1	4.44 A	70	12.2	115/208-230 V	1;4;6;9
		1800	W56	.75180S1BCDW56-S	$305	C1S	30.7	1	4.69 A	67	11.81	115/208-230 V	1;4;6;9
		3600	W56	.75360S1BCDW56-S	$237	C1S	22.05	1	5.67 A	63	10.64	115/208-230 V	1;4;6;9
1	0.75	1800	56	001180S1BCD56-S	$350	C1S	32.84	1	5.96 A	72	13.39	115/208-230 V	1;4;6;9
		3600	56	001360S1BCD56-S	$278	C1S	24.25	1	6.67 A	67	11.81	115/208-230 V	1;4;6;9
		3600	W56	001360S1BCDW56-S	$275	C1S	25.24	1	7.01 A	65.5	11.02	115/208-230 V	1;4;6;9
1.5	1.1	1800	56H	001580S1BCD56H-S	$390	C1S	35.12	1	9.10 A	73	13.39	115/208-230 V	1;4;6;9
		3600	56	001560S1BCD56-S	$311	C1S	25.79	1	8.10 A	72	11.81	115/208-230 V	1;4;6;9
2	1.5	1800	56H	002180S1BCD56H-S	$425	C1S	41.67	1	10.6 A	75	13.78	115/208-230 V	1;4;6;9
		3600	56H	002360S1BCD56H-S	$372	C1S	28.66	1	9.88 A	75	12.2	115/208-230 V	1;4;6;9
3	2.2	1800	56H	003180S1DCD56H-S	$478	C1S	48.29	1	12.4 A	78	14.57	230 V	1;4;6;9
		1800	184T	003180S1CCD0L184T	$687	C1	99	1.15	17.5	75	14.875	208-230	4;6
		3600	56H	003360S1BCD56H-S	$432	C1S	34.83	1	13.9 A	79	12.99	115/208-230 V	1;4;6;9
5	3.7	3600	56H	005360S1DCD56H-S	$458	C1S	46.3	1	20.5 A	80	14.57	230 V	1;4;6;9
		3600	56HZ	005360S1DCD56HZ-S	$481	C1S	53	1	20.3 A	80	13.533	230	1;4;5;6;9
		3600	W182/4Y	005360S1CCDW184Y-S	$526	C1S	56	1	20.7	80	15.905	208-230	1;4;5;6;9
		1800	184T	005180S1CCD0L184T	$721	C1	101	1.15	21.5	82.5	14.875	208-230	4;6
		1800	184T	005180S1CCD184T	$682	C1	102	1.25	21.5	82.5	14.875	208-230	6;10
7.5	5.5	1800	215T	007180S1CCD215T	$961	C1	129	1.15	31.3	84.5	19.66	208-230	5;6;9;28
10	7.5	1800	215T	010180S1CCD215T	$1,468	C1	162	1.15	43	85	21.235	208-230	5;6;9;28

ODP – Three-Phase – Foot Mount

HP	kW	RPM	Frame	Catalog Number	List Price	Mult. Symbol	Approx. Shipping Weight (lbs)	Service Factor	FL Amps @ High	FL. Eff (%)	"C" Dimension (in)	Voltage (V)	Notes
1	0.75	1800	143/5T	001180T3E143T-S	$390	N1S	38	1.15	1.50	85.5	11.181	230/460	9
		1800	143/5T	001180T3P143T-S	$390	N1S	38	1.15	3.50	85.5	11.181	200	9
		1800	143/5T	001180T3ECD143T-S	$398	N1S	38	1.15	1.50	85.5	11.181	230/460	6;9
1.5	1.1	3600	143/5T	001560T3E143T-S	$442	N1S	33	1.15	1.90	84.0	11.181	230/460	9
		1800	143/5T	001580T3E145T-S	$449	N1S	45	1.15	2.10	86.5	12.362	230/460	9
		1800	143/5T	001580T3P145T-S	$449	N1S	45	1.15	4.80	86.5	12.362	200	9
		1800	143/5T	001580T3ECD145T-S	$458	N1S	45	1.15	2.10	86.5	12.362	230/460	6;9
2	1.5	3600	143/5T	002360T3E145T-S	$487	N1S	40	1.15	2.40	85.5	11.969	230/460	9
		1800	143/5T	002180T3E145T-S	$492	N1S	43	1.15	2.70	86.5	12.362	230/460	9
		1800	143/5T	002180T3P145T-S	$492	N1S	43	1.15	6.20	86.5	12.362	200	9
		1800	143/5T	002180T3ECD145T-S	$502	N1S	43	1.15	2.70	86.5	12.362	230/460	6;9
3	2.2	3600	143/5T	003360T3E145T-S	$545	N1S	43	1.15	3.60	85.5	12.362	230/460	9
		1800	182/4T	003180T3E182T-S	$524	N1S	73	1.15	3.90	89.5	15.157	230/460	9
		1800	182/4T	003180T3P182T-S	$524	N1S	73	1.15	8.90	89.5	15.157	200	9
5	3.7	3600	56H	005360S3ECD56-S	$412	C1S	41	1.00	6.40	74.8	12.675	208-230/460	1;6;9;29
		3600	182/4T	005360T3E182T-S	$651	N1S	60	1.15	6.10	86.5	13.977	230/460	9
		1800	182/4T	005180T3E184T-S	$630	N1S	88	1.15	6.30	89.5	16.339	230/460	9
		1800	182/4T	005180T3P184T-S	$630	N1S	88	1.15	14.6	89.5	16.339	200	9
7.5	5.5	3600	182/4T	007360T3E184T-S	$920	N1S	70	1.15	8.70	88.5	14.764	230/460	9
		1800	213/5T	007180T3E213T-S	$910	N1S	125	1.15	9.30	91.0	16.575	230/460	9
		1800	213/5T	007180T3P213T-S	$910	N1S	125	1.15	21.3	91.0	16.575	200	9
10	7.5	3600	213/5T	010360T3E213T-S	$1,081	N1S	125	1.15	12.0	89.5	16.575	230/460	9
		1800	213/5T	010180T3E215T-S	$1,102	N1S	130	1.15	12.4	91.7	16.575	230/460	9
		1800	213/5T	010180T3P215T-S	$1,102	N1S	130	1.15	28.5	91.7	16.575	200	9
15	11	1800	254/6T	015180T3E254T-S	$1,477	N1S	211	1.15	18.6	93.0	20.472	230/460	9
		1800	254/6T	015180T3H254T-S	$1,477	N1S	211	1.15	14.9	93.0	20.472	575	9
		1800	254/6T	015180T3P254T-S	$1,477	N1S	211	1.15	42.8	93.0	20.472	200	9
20	15	3600	254/6T	020360T3E254T-S	$1,760	N1S	187	1.15	23.8	91.0	20.472	230/460	9
		1800	254/6T	020180T3E256T-S	$1,832	N1S	235	1.15	25.0	93.0	20.472	230/460	9
25	18.5	3600	254/6T	025360T3E256T-S	$2,139	N1S	202	1.15	29.1	91.7	20.472	230/460	9

Please refer to inside back cover for description of "NOTES"

For detailed specifications, data sheets, drawings and performance curves visit http:// www.weg.net

Data subject to change without notice.

Instant Reverse - Single Phase Motors

Standard Features

- Application: Gates and Garage Doors
- Service Duty: Suitable for frequent reverse
- Manual overload torque
- Three-wire connection for instand reverse
- Permanent Split Capacitor Design (Switches)
- ZZ Bearings
- UL(RU) and CSA
- 60Hz Only
- IP55

ODP - C Face - Footless

HP	kW	RPM	Frame	Catalog Number	List Price	Mult. Symbol	Approx. Shipping Weight (lbs)	Service Factor	FL Amps @ High	FL. Eff (%)	"C" Dimension (in)	Voltage (V)	Notes
0.5	0.37	1800	W56C	**.50180S1AIW56CFL-S**	**$394**	F1B	18.74	1	6.19	57.5	10.633	115V	4, 9
0.75	0.56	1800	W56C	**.75180S1AIW56CFL-S**	**$470**	F1B	18.7	1	7.9	62	10.633	115V	4, 9

ODP - Resilient Base

HP	kW	RPM	Frame	Catalog Number	List Price	Mult. Symbol	Approx. Shipping Weight (lbs)	Service Factor	FL Amps @ High	FL. Eff (%)	"C" Dimension (in)	Voltage (V)	Notes
0.33	0.25	1800	W56	**.33180S1ARBIW56-S**	**$475**	F1B	18.7	1.15	4.16	55	10.532	115V	4, 9, 13
0.5	0.37	1800	W56	**.50180S1ARBIW56-S**	**$486**	F1B	18.7	1	6.19	57.5	11.319	115V	4, 9, 13
0.75	0.56	1800	W56	**.75180S1ARBIW56-S**	**$580**	F1B	18.7	1	7.9	62	11.319	115V	4, 9, 13

Please refer to inside back cover for description of "NOTES"

For detailed specifications, data sheets, drawings and performance curves visit http://www.weg.net

Definite Purpose Motors

REFRIGERATION MOTORS

W40 Refrigeration 'RF'- ODP Cast Iron

The W40 Refrigeration 'RF' motor includes the features commonly required for industrial refrigeration compressor applications. Optimized solutions for use on soft start or VFD control.

WEG Open Drip Proof (ODP) motor is a general purpose line designed for environments where dirt and moisture are minimal. The ODP cast iron frame is designed to provide maximum ventilation and heat dissipation, offering low vibration levels, high mechanical stiffness and durability.

Standard Features - Industrial Refrigeration

- High Grade FC200 Cast Iron frame for added strength and reduced vibration
- Open Drip Proof with IP23 Degree of Protection
- Class F insulation (Impregnation Resin and Magnet wire are class H)
- F1 Mounted (F2 Convertible)
- Stainless Steel Nameplate - Laser etched with high contrast background
- Regreasable ball bearings
- Service Factor on Soft Starter: 1.25 – 1.15
- Service Factor on VFD: 1.0 Same HP and
- 1.15 with Derated HP (2:1 Constant Torque)

Features that make a difference

- Inverter Duty Insulation system per NEMA MG1,Part 31 – WEG Wise System
- Anti-Condensation Space Heaters (110-127/200-240 V)
- Insulated NDE Bearing Housing on 447/9TS frame and up
- Low Noise Design for quiet operation
- Over-sized diagonal split terminal box
- Premium WEG Chemical Paint system exceeds 200 Hour Salt Spray test
- Side terminal box hole 1/2" NPT for accessory connections

Industrial Refrigeration RFVFD models Additional Features

- 1.15 SF on VFD (2:1 Constant Torque)
- Insulated NDE Bearing Housing
- Internal AEGIS Shaft Grounding

Please refer to inside back cover for description of "NOTES"

Foot Mount

HP	kW	RPM	Frame	Catalog Number	List Price	Mult. Symbol	Approx. Ship Weight (lbs)	Service Factor	FL Amps @ High	FL. Eff (%)	"C" Dimension (in)	Voltage	Notes
75	55	3600	364/5TS	075360T3E364TS-RFW40	$6,379	N1B	816	1.25	84.8	93.6	27.520	230/460	
100	75	3600	364/5TS	100360T3G365TS-RFW40	$7,308	N1B	840	1.25	116	93.6	27.520	460	
125	90	3600	404/5TS	125360T3G404TS-RFW40	$9,709	N1B	972	1.25	136	94.1	31.100	460	
150	110	3600	404/5TS	150360T3G405TS-RFW40	$12,558	N1B	988	1.25	167	94.1	31.100	460	
200	150	3600	444/5TS	200360T3G444TS-RFW40	$15,954	N1B	1412	1.15	225	95.0	34.575	460	
250	185	3600	444/5TS	250360T3G445TS-RFW40	$20,881	N1B	1527	1.15	278	95.0	34.575	460	
300	220	3600	444/5TS	300360T3G445TS-RFW40	$24,523	N1B	1593	1.15	329	95.4	34.575	460	
350	260	3600	447/9TS	350360T3G449TS-RFW40	$28,813	N1B	2121	1.15	384	95.4	42.959	460	43
400	300	3600	447/9TS	400360T3G449TS-RFW40	$30,680	N1B	2200	1.15	442	95.8	42.959	460	43
450	330	3600	447/9TS	450360T3G449TS-RFW40	$32,475	N1B	2315	1.15	478	96.2	42.959	460	43
500	370	3600	447/9TS	500360T3G449TS-RFW40	$36,197	N1B	2391	1.15	536	96.2	42.959	460	43
600	440	3600	447/9TS	600360T3G449TS-RFW40	$37,943	N1B	2520	1.15	645	96.2	42.959	460	43
700	515	3600	5010/11TS	700360T3G5010S-RF	$48,993	N1B	4297	1.15	760	96.6	56.992	460	43
800	590	3600	5010/11TS	800360T3G5010S-RF	$51,795	N1B	4239	1.15	881	96.6	56.992	460	43

Foot Mount - RFVFD Models (AEGIS inside and Insulated Bearing Housing)

HP	kW	RPM	Frame	Catalog Number	List Price	Mult. Symbol	Approx. Shipping Weight (lbs)	Service Factor	FL Amps @ High	FL. Eff (%)	"C" Dimension (in)	Voltage	Notes
75	55	3600	364/5TS	075360T3E364TS-RFVFD	$8,509	N1B	774	1.15	87.8	93.6	27.520	230/460	34;37;43
100	75	3600	364/5TS	100360T3G365TS-RFVFD	$9,438	N1B	990	1.15	121	93.6	27.520	460	34;37;43
125	90	3600	404/5TS	125360T3G404TS-RFVFD	$11,950	N1B	1215	1.15	136	94.1	31.100	460	34;37;43
150	110	3600	404/5TS	150360T3G405TS-RFVFD	$14,799	N1B	1107	1.15	169	94.1	31.100	460	34;37;43
200	150	3600	444/5TS	200360T3G444TS-RFVFD	$18,818	N1B	1535	1.15	233	95	34.575	460	34;37;43
250	185	3600	444/5TS	250360T3G445TS-RFVFD	$23,745	N1B	1394	1.15	284	95	34.575	460	34;37;43
300	220	3600	447/9TS	300360T3G449TS-RFVFD	$27,387	N1B	1746	1.15	329	95.4	42.959	460	34;37;43

C-Face - Foot Mount

HP	kW	RPM	Frame	Catalog Number	List Price	Mult. Symbol	Approx. Shipping Weight (lbs)	Service Factor	FL Amps @ High	FL. Eff (%)	"C" Dimension (in)	Voltage	Notes
75	55	3600	364/5TSC	075360T3E364TSC-RFW4	$6,812	N1B	852	1.25	84.8	93.6	27.520	230/460	
100	75	3600	364/5TSC	100360T3G365TSC-RFW4	$7,742	N1B	866	1.25	116	93.6	27.520	460	
125	90	3600	404/5TSC	125360T3G404TSC-RFW4	$10,199	N1B	998	1.25	136	94.1	31.100	460	
150	110	3600	404/5TSC	150360T3G405TSC-RFW4	$13,048	N1B	1015	1.25	167	94.1	31.100	460	
200	150	3600	444/5TSC	200360T3G444TSC-RFW4	$16,570	N1B	1463	1.15	225	95.0	34.575	460	
250	185	3600	444/5TSC	250360T3G445TSC-RFW4	$21,497	N1B	1574	1.15	278	95.0	34.575	460	
300	220	3600	444/5TSC	300360T3G445TSC-RFW4	$25,139	N1B	1619	1.15	329	95.4	34.575	460	
350	260	3600	447/9TSC	350360T3G449TSC-RFW4	$29,637	N1B	2164	1.15	384	95.4	42.959	460	43

Notes:
34) AEGIS® Inside
37) Design A
43) With insulated non drive end housing

Definite Purpose Motors

HYDRAULIC PUMP MOTORS

TEFC – Three-Phase – SAE-A – High Efficiency

Heavy duty cast iron enclosure designed for intermittent duty. Typical applications are hydraulic pumps for trash compactors, car lifts and others.

- Class F insulation (Impregnation Resin and magnet Wire are class H)
- F3 mount
- 8-hole SAE-A flange for different angle pump mounting
- Shaft with 3/4” bore (female shaft)

Features that make a difference

- NPT Threaded terminal box
- Cast Iron frame
- Totally Enclosed IP55 rated

TEFC – Three-Phase – SAE-A – High Efficiency

HP	kW	RPM	Frame	Catalog Number	List Price	Mult. Symbol	Approx. Shipping Weight (lbs)	Service Factor	FL Amps @ High	FL. Eff (%)	“C” Dimension (in)	Voltage (V)	Notes
5	3.7	1800	184TYZ	**00518EP3EHP184TYZ7F3**	**$819**	W1	99	1.15	7.37	87.5	12.800	208-230/460	8;30;37
7.5	5.5	1800	213TYZ	**00718EP3EHP213TYZ7F3**	**$1,054**	W1	172	1.15	10.9	89.5	14.816	208-230/460	8;30;37
10	7.5	1800	215TYZ	**01018EP3EHP215TYZ7F3**	**$1,244**	W1	189	1.15	15.7	89.5	16.312	208-230/460	8;30;37

Can’t find what you are looking for? Call **1-800-ASK-4WEG** (275-4934)

Definite Purpose Motors

BRAKE MOTORS

TEFC - Three-Phase - NEMA Premium®

WEG W22 brake motors consist of an induction motor coupled to a disc brake. Brake is of sturdy construction with few moving parts which guarantees long durability and minimum maintenance.

Standard Features:

- Class F insulation (Impregnation Resin and Magnet wire are class H)
- 230V Brake Rectifier
- F1 Mounted
- Stainless Steel Nameplate - Laser etched with high contrast background
- Regreasable ball bearings (Frames 254T and up)
- 60HZ - 50HZ available with custom build

Note: If separate power supply to the Brake is required, (Such as on Motors operating with Variable Frequency Drive), 230V to the Brake module is standard.

Optional Feature:
460V brake rectifier is available with motor modification

Features that make a difference:

- 1.25 Service Factor
- NPT Threaded terminal box
- Armature type brake
- Manual Release

Inverter Rated:
1000:1 for variable torque
20:1 for constant torque

Brake Torques			
Frame	N.m	lb.ft	Optional lb.ft
143/5T	16	12	17
182/4T	60	44	N/A
213/5T	125	59	92
254/6T	235	111	173
284/6T	400	192	254

TEFC – Foot Mount

HP	kW	RPM	Frame	Catalog Number	List Price	Mult. Symbol	Approx. Shipping Weight (lbs)	Service Factor	FL Amps @ High	FL. Eff (%)	"C" Dimension (in)	Voltage (V)	Notes
1	0.75	1800	143/5T	00118ET3EBM143T-W22	$1,494	B1	59	1.25	1.47	85.5	16.231	230/460	25
		1800	143/5T	00118ET3HBM143T-W22	$1,494	B1	62	1.25	1.18	85.5	16.231	575	25
		1200	143/5T	00112ET3EBM145T-W22	$1,587	B1	66	1.25	1.73	82.5	16.231	230/460	25
		900	182/4T	00109ET3EBM182T-W22	$2,594	B1	126	1.25	2.30	78.5	19.314	230/460	25
1.5	1.1	3600	143/5T	00156ET3EBM143T-W22	$1,501	B1	73	1.25	1.96	84.0	16.231	230/460	25
		1800	143/5T	00158ET3EBM145T-W22	$1,569	B1	65	1.25	2.02	86.5	16.231	230/460	25
		1200	182/4T	00152ET3EBM182T-W22	$2,264	B1	117	1.25	2.54	87.5	19.314	230/460	25
		900	182/4T	00159ET3EBM184T-W22	$2,703	B1	156	1.25	2.70	82.5	19.314	230/460	25
2	1.5	3600	143/5T	00236ET3EBM145T-W22	$1,501	B1	62	1.25	2.56	85.5	16.231	230/460	25
		1800	143/5T	00218ET3EBM145T-W22	$1,594	B1	66	1.25	2.76	86.5	16.231	230/460	25
		1200	182/4T	00212ET3EBM184T-W22	$2,369	B1	122	1.25	3.23	88.5	19.314	230/460	25
		900	213/5T	00209ET3EBM213T-W22	$3,345	B1	217	1.25	3.39	85.5	23.188	230/460	25
3	2.2	3600	182/4T	00336ET3EBM182T-W22	$2,290	B1	140	1.25	3.63	86.5	19.314	230/460	25
		1800	182/4T	00318ET3EBM182T-W22	$2,052	B1	115	1.25	3.91	89.5	19.314	230/460	25
		1200	213/5T	00312ET3EBM213T-W22	$3,220	B1	196	1.25	4.41	89.5	23.188	230/460	25
		900	213/5T	00309ET3EBM215T-W22	$3,740	B1	259	1.25	4.55	85.5	23.188	230/460	25
5	3.7	3600	182/4T	00536ET3EBM184T-W22	$2,343	B1	126	1.25	5.90	88.5	19.314	230/460	25
		1800	182/4T	00518ET3EBM184T-W22	$2,291	B1	124	1.25	6.45	89.5	19.314	230/460	25
		1800	182/4T	00518ET3HBM184T-W22	$2,291	B1	124	1.25	5.16	89.5	19.314	575	25
		1200	213/5T	00512ET3EBM215T-W22	$3,406	B1	213	1.25	6.83	89.5	23.188	230/460	25
		900	254/6T	00509ET3EBM254T-W22	$5,641	B1	358	1.25	7.58	87.5	29.839	230/460	25
7.5	5.5	3600	213/5T	00736ET3EBM213T-W22	$3,002	B1	200	1.25	8.76	89.5	23.188	230/460	25
		1800	213/5T	00718ET3EBM213T-W22	$2,903	B1	215	1.25	9.18	91.7	23.188	230/460	25
		1200	254/6T	00712ET3EBM254T-W22	$5,172	B1	377	1.25	9.48	91.0	29.839	230/460	25
		900	254/6T	00709ET3EBM256T-W22	$6,415	B1	377	1.25	11.1	87.5	29.839	230/460	25;51
10	7.5	3600	213/5T	01036ET3EBM215T-W22	$3,492	B1	238	1.25	11.6	90.2	23.188	230/460	25;51
		1800	213/5T	01018ET3EBM215T-W22	$3,474	B1	221	1.25	12.4	91.7	23.188	230/460	25
		1800	213/5T	01018ET3HBM215T-W22	$3,474	B1	200	1.25	9.92	91.7	23.188	575	25
		1200	254/6T	01012ET3EBM256T-W22	$5,759	B1	367	1.25	12.9	91.0	29.839	230/460	25
15	11	3600	254/6T	01536ET3EBM254T-W22	$4,745	B1	384	1.25	17.2	91.0	29.839	230/460	25
		1800	254/6T	01518ET3EBM254T-W22	$5,205	B1	407	1.25	18.0	92.4	29.839	230/460	25
		1800	254/6T	01518ET3HBM254T-W22	$5,205	B1	369	1.25	14.4	92.4	29.839	575	25
20	15	3600	254/6T	02036ET3EBM256T-W22	$5,768	B1	424	1.25	23.2	91.0	29.839	230/460	25
		1800	254/6T	02018ET3EBM256T-W22	$5,771	B1	456	1.25	24.1	93.0	29.839	230/460	25
25	18.5	1800	284/6T	02518ET3EBM284T-W22	$6,796	B1	520	1.25	29.5	93.6	32.976	230/460	25
30	22	1800	284/6T	03018ET3EBM286T-W22	$7,276	B1	558	1.25	35.1	93.6	32.976	230/460	25

Please refer to inside back cover for description of "NOTES"

For detailed specifications, data sheets, drawings and performance curves visit http:// www.weg.net

Data subject to change without notice.

Spring-Set brake (Solenoid Actuated)

Standard Features:

- 1.15 Service Factor
- Manual Release Lever
- AC brake
- Inverter Rated
- IP55 Enclosure
- Dual Frequency (50/60 Hz)

Applications:

- Conveyors
- Door Operators
- Packaging Equipment
- Unit Handling

Definite Purpose Motors

ROLLED STEEL BRAKE MOTORS

TEFC - Foot Mount

HP	kW	RPM	Frame	atalog Number	List Prie	Mult. Symbol	Approx. Shipping Weight (lbs)	Brake Torque (ft.lb)	FL. Amps @ High	FL. Eff (%)	"C" Dimension (in)	Volts	Notes
0.25	0.18	1800	W56	.2518ES3EBMW56-S	$928	RSB	24	3	0.50	66.0	14.610	208-230/460	9
0.33	0.25	1800	W56	.3318ES3EBMW56-S	$977	RSB	26	3	0.66	68.0	14.610	208-230/460	9
0.5	0.37	1800	W56	.5018ES3EBMW56-S	$1,105	RSB	27	3	1.00	72.0	15.004	208-230/460	9
0.75	0.55	1800	W56	.7518ES3EBMW56-S	$1,301	RSB	38	6	1.22	75.5	15.397	208-230/460	9
1	0.75	1800	56	00118ET3EBM56-S	$1,504	RSB	54	6	1.47	85.5	17.835	230/460	9
		1800	143T	00118ET3EBM143T-S	$1,729	RSB	55	6	1.47	85.5	17.914	230/460	9
1.5	1.1	1800	145T	00158ET3EBM145T-S	$1,866	RSB	56	10	2.02	86.5	17.914	230/460	9
2	1.5	1800	145T	00218ET3EBM145T-S	$1,921	RSB	60	10	2.72	86.5	18.307	230/460	9
3	2.2	1800	182T	00318ET3EBM182T-S	$2,117	RSB	113	15	3.81	89.5	22.992	230/460	9
5	3.7	1800	184T	00518ET3EBM184T-S	$2,492	RSB	91	25	6.49	89.5	22.992	230/460	9
7.5	5.5	1800	213T	00718ET3EBM213T-S	$4,563	RSB	151	35	9.07	91.7	26.457	230/460	9
10	7.5	1800	215T	01018ET3EBM215T-S	$4,989	RSB	165	50	12.2	91.7	26.850	230/460	9
15	11	1800	254T	01518ET3EBM254T-S	$6,985	RSB	256	75	18.2	92.4	31.220	230/460	9
20	15	1800	256T	02018ET3EBM256T-S	$9,080	RSB	291	100	24.7	93.0	32.007	230/460	9

Please refer to inside back cover for description of "NOTES"

For detailed specifications, data sheets, drawings and performance curves visit http:// www.weg.net

Data subject to change without notice.

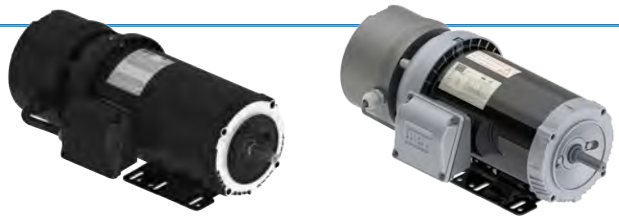

TEFC - C-Face - Foot Mount

HP	kW	RPM	Frame	Catalog Number	List Price	Mult. Symbol	Approx. Shipping Weight (lbs)	Brake Torque (ft.lb)	FL. Amps @ High	FL. Eff (%)	"C" Dimension (in)	Volts	Notes
1	0.75	1800	56C	00118ET3EBM56C-S	$1,542	RSB	54	6	1.47	85.5	17.835	230/460	9
		1800	143TC	00118ET3EBM143TC-S	$1,767	RSB	55	6	1.47	85.5	17.914	230/460	9
1.5	1.1	1800	145TC	00158ET3EBM145TC-S	$1,904	RSB	56	10	2.02	86.5	17.914	230/460	9
2	1.5	1800	145TC	00218ET3EBM145TC-S	$1,959	RSB	60	10	2.72	86.5	18.307	230/460	9
3	2.2	1800	182TC	00318ET3EBM182TC-S	$2,189	RSB	113	15	3.81	89.5	22.992	230/460	9
5	3.7	1800	184TC	00518ET3EBM184TC-S	$2,564	RSB	91	25	6.49	89.5	22.992	230/460	9
7.5	5.5	1800	213TC	00718ET3EBM213TC-S	$4,702	RSB	151	35	9.07	91.7	26.457	230/460	9
10	7.5	1800	215TC	01018ET3EBM215TC-S	$5,128	RSB	165	50	12.2	91.7	26.850	230/460	9

TEFC - C-Face - Footless

HP	kW	RPM	Frame	Catalog Number	List Price	Mult. Symbol	Approx. Shipping Weight (lbs)	Brake Torque (ft.lb)	FL. Amps @ High	FL. Eff (%)	"C" Dimension (in)	Volts	Notes
0.25	0.18	1800	W56C	.2518ES3EBMW56CFL-S	$966	RSB	24	3	0.50	66.0	14.610	208-230/460	9
0.33	0.25	1800	W56C	.3318ES3EBMW56CFL-S	$1,015	RSB	26	3	0.66	68.0	14.610	208-230/460	9
0.5	0.37	1800	W56C	.5018ES3EBMW56CFL-S	$1,143	RSB	27	3	1.00	72.0	15.004	208-230/460	9
0.75	0.55	1800	W56C	.7518ES3EBMW56CFL-S	$1,339	RSB	38	6	1.22	75.5	15.397	208-230/460	9
1	0.75	1800	56C	00118ET3EBM56CFL-S	$1,542	RSB	54	6	1.47	85.5	18.165	230/460	9
		1800	143TC	00118ET3EBMR143TC-S	$1,767	RSB	55	6	1.47	85.5	18.244	230/460	9
1.5	1.1	1800	56C	00158ET3EBM56CFL-S	$1,856	RSB	55	10	2.02	86.5	18.165	230/460	9
		1800	145TC	00158ET3EBMR145TC-S	$1,904	RSB	56	10	2.02	86.5	18.244	230/460	9
2	1.5	1800	56C	00218ET3EBM56CFL-S	$1,925	RSB	59	10	2.72	86.5	18.559	230/460	9
		1800	145TC	00218ET3EBMR145TC-S	$1,959	RSB	60	10	2.72	86.5	18.637	230/460	9
3	2.2	1800	182TC	00318ET3EBMR182TC-S	$2,189	RSB	113	15	3.81	89.5	22.858	230/460	9
5	3.7	1800	184TC	00518ET3EBMR184TC-S	$2,564	RSB	91	25	6.49	89.5	22.992	230/460	9
7.5	5.5	1800	213TC	00718ET3EBMR213TC-S	$4,702	RSB	151	35	9.07	91.7	26.457	230/460	9
10	7.5	1800	215TC	01018ET3EBMR215TC-S	$5,128	RSB	165	50	12.2	91.7	26.850	230/460	9

Motor Options upon Inquiry:

- Single-Phase Motor
- ODP or TENV Enclosure
- AEGIS® Inside

Please refer to inside back cover for description of "NOTES"

For detailed specifications, data sheets, drawings and performance curves visit http://www.weg.net

SAW ARBOR MOTORS

TEFC

Single and double shaft end available. These intermittent duty motors are suitable for a wide range of applications such as circular saws, pendulum saws, polishing machines, among others.

Standard Features:

- Class F insulation (Impregnation Resin and magnet Wire are class H)
- Ball bearings
- PG threaded terminal boxes

Features that make a difference:

- Reinforced cast iron frame
- Low profile

TEFC – Three-Phase – Right-Hand Thread

HP	kW	RPM	Frame	Catalog Number	List Price	Mult. Symbol	Approx. Shipping Weight (lbs)	Service Factor	FL Amps @ High	FL. Eff (%)	"C" Dimension (in)	Voltage (V)	Notes
3	2.2	3600	80S	**00336ES3ESA80SR**	**$969**	01	93	1.00	4.29	80.5	18.543	208-230/460	39
5	3.7	3600	80M	**00536ES3ESA80MR**	**$1,160**	01	109	1.00	6.65	85.0	20.512	208-230/460	39
		1800	90L	**00518ES3ESA90LR**	**$1,701**	01	163	1.00	7.03	84.5	26.476	208-230/460	39
7.5	5.5	3600	80L	**00736ES3ESA80LR**	**$1,642**	01	132	1.00	9.76	87.4	22.480	208-230/460	39
		3600	80L	**00736ES3HSA80LR**	**$1,642**	01	133	1.00	7.81	87.4	22.480	575	39
		1800	90L	**00718ES3ESA90LR**	**$1,855**	01	179	1.00	10.1	85.3	26.476	208-230/460	39
10	7.5	3600	90L	**01036ES3ESA90LR**	**$1,953**	01	178	1.00	12.3	85.0	26.476	208-230/460	39
		3600	90L	**01036ES3HSA90LR**	**$1,953**	01	179	1.00	9.84	85.0	26.476	575	39;51
		1800	90L	**01018ES3ESA90LR**	**$2,176**	01	192	1.00	14.7	85.5	26.476	208-230/460	39

TEFC – Three-Phase – Left-Hand Thread

HP	kW	RPM	Frame	Catalog Number	List Price	Mult. Symbol	Approx. Shipping Weight (lbs)	Service Factor	FL Amps @ High	FL. Eff (%)	"C" Dimension (in)	Voltage (V)	Notes
3	2.2	3600	80S	**00336ES3ESA80SL**	**$969**	01	93	1.00	4.29	80.5	18.543	208-230/460	39
5	3.7	3600	80M	**00536ES3ESA80ML**	**$1,160**	01	109	1.00	6.65	85.0	20.512	208-230/460	39
		1800	90L	**00518ES3ESA90LL**	**$1,701**	01	163	1.00	7.03	84.5	26.476	208-230/460	39
7.5	5.5	3600	80L	**00736ES3ESA80LL**	**$1,642**	01	132	1.00	9.76	87.4	22.480	208-230/460	39
		3600	80L	**00736ES3HSA80LL**	**$1,642**	01	134	1.00	7.81	87.4	22.480	575	39
		1800	90L	**00718ES3ESA90LL**	**$1,855**	01	177	1.00	10.1	85.3	26.476	208-230/460	39
10	7.5	3600	90L	**01036ES3ESA90LL**	**$1,953**	01	178	1.00	12.3	85.0	26.476	208-230/460	39
		3600	90L	**01036ES3HSA90LL**	**$1,953**	01	180	1.00	9.84	85.0	26.476	575	39
		1800	90L	**01018ES3ESA90LL**	**$2,176**	01	192	1.00	14.7	85.5	26.476	208-230/460	39

Please refer to inside back cover for description of "NOTES"

For detailed specifications, data sheets, drawings and performance curves visit http://www.weg.net

Data subject to change without notice.

SOOT BLOWER MOTORS

TEFC – C-Face – Footless

HP	kW	RPM	Frame	Catalog Number	List Price	Mult. Symbol	Approx. Shipping Weight (lbs)	Service Factor	FL Amps @ High	FL. Eff (%)	"C" Dimension (in)	Voltage (V)	Notes
1.5	1.1	1800	143/5TCZ	00158ET3ESB145TCZ1-S	$1,489	RSP	43	1.15	2.20	86.5	13.583	230/460	9;20
2	1.5	1800	143/5TCZ	00218ET3ESB145TCZ1-S	$1,612	RSP	47	1.15	2.70	86.5	13.976	230/460	9;20
		1800	143/5TCZ	00218ET3ESB145TCZ2-S	$1,612	RSP	47	1.15	2.70	86.5	14.049	230/460	9;20

Type -1 shaft

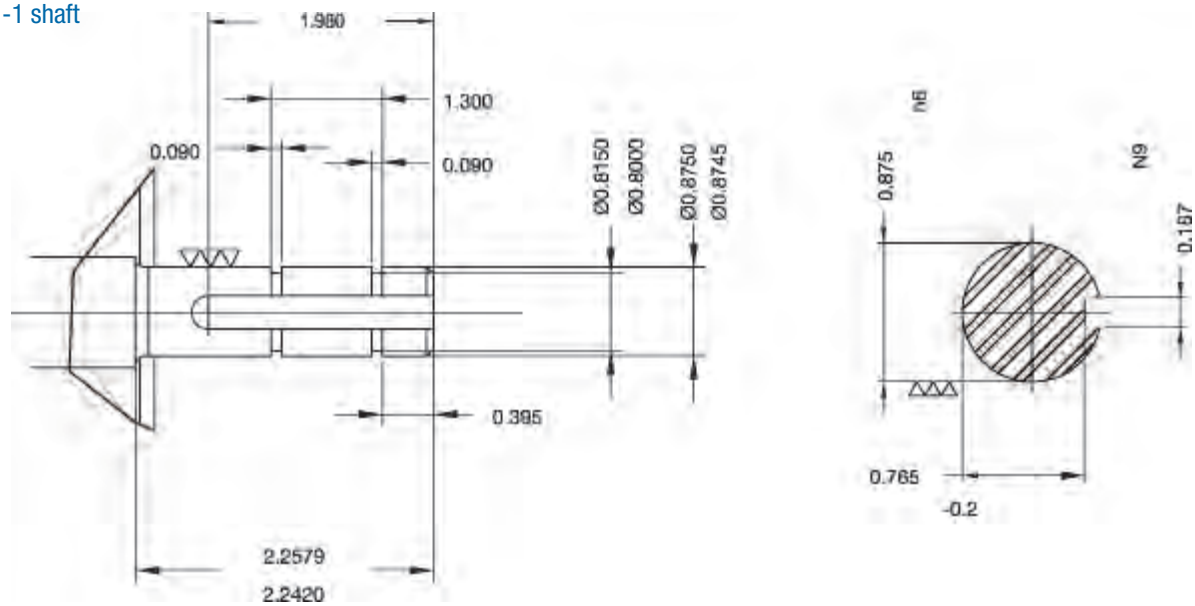

Type -2 shaft

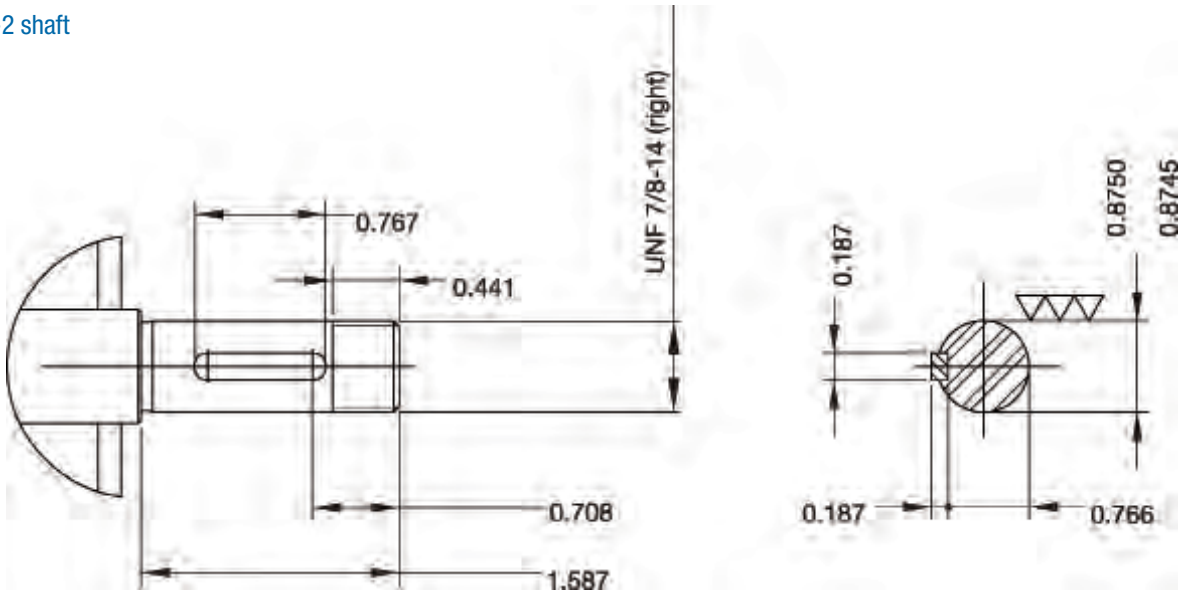

Please refer to inside back cover for description of "NOTES"

For detailed specifications, data sheets, drawings and performance curves visit http://www.weg.net

WATER COOLED THREE-PHASE MOTORS

TEFC

W22 Water Cooled motors are especially suitable for applications with limited space, hard-to-reach maintenance areas, air circulation limitations, and equipment where the process already requires a continuous water circuit. This prevents overheating and makes the W22 Water Cooled line an excellent choice for environments that demand controlled temperatures.

Standard Features:

- Output: up to 550 HP
- Number of poles: 2 to 6 poles
- Low noise level
- Standard paint with C4 protection level
- Grouding terminals on frame and main terminal box

W22 Water Cooled motors can be used for a wide variety of applications and are mainly recommended where space and noise level reduction is required. They are also recommended for different applications including:

- Marine
- Tunnel Boring Machines
- Textile Industry
- Mining Equipment
- Plastic injection molding
- Rubber Industry

TEWC – Three-Phase –Foot Mount

HP	kW	RPM	Frame	Catalog Number	List Price	Mult Symbol	Approx Shipping Weight (lbs)	Service Factor	FL Amps	FL. Eff	C dimen-sion (in)	Voltage	Notes
40	30	3600	324/6TS	04036ET3QWC326TS-W22	$10,504	WC	898	1	49	92.4	31.85	460	1;8;37;51
50	37	3600	324/6TS	05036ET3QWC326TS-W22	$11,176	WC	910	1	58	93	31.85	460	1;8;37;51
60	45	3600	324/6TS	06036ET3QWC326TS-W22	$12,471	WC	925	1	71	93.6	31.85	460	1;8;37;51
75	55	3600	324/6TS	07536ET3QWC326TS-W22	$13,093	WC	930	1	86	93.6	31.85	460	1;8;37;51
100	75	3600	324/6TS	10036ET3QWC326TS-W22	$13,749	WC	958	1	119	94.1	31.85	460	1;8;37;51
125	90	3600	404/5TS	12536ET3QWC405TS-W22	$20,326	WC	1611	1	134	95	41.46	460	1;8;37;51
150	110	3600	404/5TS	15036ET3QWC405TS-W22	$21,449	WC	1635	1	165	95	41.46	460	1;8;37;51
200	150	3600	404/5TS	20036ET3QWC405TS-W22	$26,672	WC	1697	1	222	95.4	41.46	460	1;8;37;51
250	185	3600	506/7TS	25036ET3QWC506TS-W22	$33,298	WC	3475	1	269	95.8	51.85	460	1;8;37;51
300	220	3600	506/7TS	30036ET3QWC506TS-W22	$42,816	WC	3485	1	328	95.8	51.85	460	1;8;37;51
350	260	3600	506/7TS	35036ET3QWC506TS-W22	$48,206	WC	3495	1	401	95.8	51.85	460	1;8;37;51
400	300	3600	506/7TS	40036ET3QWC506TS-W22	$49,196	WC	3510	1	462	95.8	51.85	460	1;8;37;51
450	330	3600	506/7TS	45036ET3QWC506TS-W22	$52,904	WC	3589	1	491	95.8	51.85	460	1;8;37;51
500	370	3600	506/7TS	50036ET3QWC506TS-W22	$58,427	WC	3950	1	577	95.8	51.85	460	1;8;37;51
550	400	3600	506/7TS	55036ET3QWC506TS-W22	$47,385	WC	4131	1	609	95.8	51.85	460	1;8;37;51
40	30	1800	324/6T	04018ET3QWC326T-W22	$12,122	WC	839	1	51	94.1	33.27	460	1;8;37;51
50	37	1800	324/6T	05018ET3QWC326T-W22	$12,896	WC	841	1	61	94.5	33.27	460	1;8;37;51
60	45	1800	324/6T	06018ET3QWC326T-W22	$14,392	WC	916	1	74	95	33.27	460	1;8;37;51
75	55	1800	404/5T	07518ET3QWC405T-W22	$19,687	WC	1514	1	85	95.4	44.47	460	1;8;37;51
100	75	1800	404/5T	10018ET3QWC405T-W22	$20,671	WC	1520	1	120	95.4	44.47	460	1;8;37;51
125	90	1800	404/5T	12518ET3QWC405T-W22	$22,042	WC	1525	1	144	95.4	44.47	460	1;8;37;51
150	110	1800	404/5T	15018ET3QWC405T-W22	$23,260	WC	1565	1	176	95.8	44.47	460	1;8;37;51
200	150	1800	506/7T	20018ET3QWC506T-W22	$37,435	WC	3270	1	228	96.2	52.86	460	1;8;37;51
250	185	1800	506/7T	25018ET3QWC506T-W22	$38,949	WC	3275	1	294	96.2	52.86	460	1;8;37;51
300	220	1800	506/7T	30018ET3QWC506T-W22	$43,072	WC	3280	1	350	96.2	52.86	460	1;8;37;51
350	260	1800	506/7T	35018ET3QWC506T-W22	$43,978	WC	3285	1	404	96.2	52.86	460	1;8;37;51
400	300	1800	506/7T	40018ET3QWC506T-W22	$51,295	WC	3541	1	466	96.2	52.86	460	1;8;37;51
450	330	1800	506/7T	45018ET3QWC506T-W22	$57,241	WC	3755	1	501	96.2	52.86	460	1;8;37;51
500	370	1800	506/7T	50018ET3QWC506T-W22	$59,798	WC	4106	1	575	96.2	52.86	460	1;8;37;51
550	400	1800	506/7T	55018ET3QWC506T-W22	$44,342	WC	4150	1	629	96.2	52.86	460	1;8;37;51
25	18.5	1200	324/6T	02512ET3QWC326T-W22	$10,917	WC	832	1	32	93	33.27	460	1;8;37;51
30	22	1200	324/6T	03012ET3QWC326T-W22	$11,463	WC	845	1	40	93	33.27	460	1;8;37;51
40	30	1200	404/5T	04012ET3QWC405T-W22	$17,500	WC	1490	1	47	94.1	44.47	460	1;8;37;51
50	37	1200	404/5T	05012ET3QWC405T-W22	$18,374	WC	1500	1	61	94.1	44.47	460	1;8;37;51
75	55	1200	404/5T	07512ET3QWC405T-W22	$20,676	WC	1515	1	93	94.5	44.47	460	1;8;37;51
125	90	1200	506/7T	12512ET3QWC506T-W22	$33,276	WC	3245	1	147	95	52.86	460	1;8;37;51
150	110	1200	506/7T	15012ET3QWC506T-W22	$34,621	WC	3255	1	180	95.8	52.86	460	1;8;37;51
200	150	1200	506/7T	20012ET3QWC506T-W22	$39,091	WC	3270	1	246	95.8	52.86	460	1;8;37;51
250	185	1200	506/7T	25012ET3QWC506T-W22	$45,793	WC	3316	1	299	95.8	52.86	460	1;8;37;51
300	220	1200	506/7T	30012ET3QWC506T-W22	$47,839	WC	3472	1	365	95.8	52.86	460	1;8;37;51
350	260	1200	506/7T	35012ET3QWC506T-W22	$52,873	WC	3667	1	426	95.8	52.86	460	1;8;37;51
400	300	1200	506/7T	40012ET3QWC506T-W22	$55,516	WC	3885	1	485	95.8	52.86	460	1;8;37;51
450	330	1200	506/7T	45012ET3QWC506T-W22	$59,869	WC	4102	1	547	95.8	52.86	460	1;8;37;51

Please refer to inside back cover for description of "NOTES"

For detailed specifications, data sheets, drawings and performance curves visit http://www.weg.net

W50 Severe Duty Motors – TEFC

W50 Medium Voltage Motors – TEFC 2300 – 4160V A-300
W50 Medium Voltage Motors – TEFC Add-On Modifications A-301
W50 Medium Voltage 2300V – Electrical Data. A-302
W50 Medium Voltage 4160V – Electrical Data. A-304
W50 Mechanical Data. A-306
Medium Voltage Worksheet. A-310
W60 Medium Voltage Overview. A-311
W60 Medium Voltage Motors – TEFC 2300 – 4160V A-312
W60 Medium Voltage 2300V & 4000V – Electrical Data A-313
W60 Medium Voltage - Mechanical Data. A-314
SSW7000C Medium Voltage Soft Starter A-316

Data subject to change without notice.

TEFC SEVERE DUTY MV MOTORS

Standard Features:

- Voltage: 2300/4160V
- Frequency: 60Hz
- 1.15SF at D.O.L. starting and safe area
- Insulation Class F
- VPI Impregnation
- Class B Temperature Rise @ 1.00SF
- Class F Temperature Rise @ 1.15SF
- Aluminum Rotor (except where otherwise indicated)
- S1 Continuous Duty
- TEFC
- IP55 Protection Degree
- F1 Mounting
  Field conversion from F1 to F2 mounting available for all motors 250HP and above
- D.O.L. Starting
- Direct coupling
- Direction of Rotation:
  CW for 2P motors (250HP and above)
  Dual for 2P (200HP), 4P and 6P motors
- Altitude: 3300 f.a.s.l.
- Ambient temperature: 40ºC
- NEMA Premium® Efficiency (250HP and above)
- Grease lubricated antifriction (ball) bearings
- 100,000hs L10 bearings lifetime
- Final Color: Blue (RAL 5009)
- NEMA Type I main terminal box (loose leads)
- Automatic grease relief
- Grounding lugs on both sides of the frame
- 4140 Steel Shaft
- 36 Months warranty from manufacturing date

Standard Accessories:

- RTD Pt100 Temperature Detectors
  (02 per phase and 01 per bearing)
- Space Heater, 120V
- Provision (flat surface) for vibration sensors
- Provision for dowel pins

Severe Duty Features:

- Most relevant features of IEEE 841
- Vibration level as per IEEE 841
- Stainless Steel extended grease tubes
- INPRO/SEAL on DE and NDE sides
- 0.005” feet flatness
- Automatic threaded T-drains
  (stainless steel)
- Tropicalization
- IEEE 841 Test reports

V.F.D. Operation Features:

- 1.00SF at V.F.D. Operation
- Class B Temperature Rise @ 1.00SF
- Suitable for V.F.D. Operation
  10:1 VT with Class B temperature rise
  2:1 CT with Class F temperature rise
- Electrically Insulated N.D.E. bearing housing
- Helwig Shaft Grounding brush
  (Add-on Modification)

Note: A method of reducing common mode voltages from motor terminals must be utilized.

Hazardous Area Features:

- 1.00SF at Hazardous Area
- Class B Temperature Rise @ 1.00SF
- CSA Certification: Class I, Div. 2,
  Gr. A, B, C and D, T3
  (Except 600HP 6P – Safe Area only)
- Non-sparking external fan

Add-on Modifications from Stock

Note: Special attention to Reciprocating Compressors applications where the motor design must be evaluated and confirmed in a case by case basis.

W50 Medium Voltage Motors

HP	kW	RPM	NEMA Frame	Catalog Number	List Price	Mult. Symbol	Approx. Shipping Weight (lbs)	Service Factor	FL. Eff (%)		"C" Dimension (in)	Voltage (V)	Notes
									2300V	4160V			
150	110	3600	L447/9TS	20036ET3XL449-W22MVR	$38,054	MAQ2	2758	1.15	93.20	93.00	53.431	2300/4160	
		1800	L447/9T	20018ET3XL449-W22MVR	$37,790	MAQ2	2608	1.15	93.30	93.30	57.181	2300/4160	
		1200	L447/9T	20012ET3XL449-W22MVR	$43,039	MAQ2	2720	1.15	93.60	93.60	57.181	2300/4160	
200	150	3600	L447/9TS	20036ET3XL449-W22MV	$38,054	MAQ2	2758	1.15	94.10	94.00	53.431	2300/4160	
		1800	L447/9T	20018ET3XL449-W22MV	$37,790	MAQ2	2608	1.15	93.80	93.80	57.181	2300/4160	
		1200	L447/9T	20012ET3XL449-W22MV	$43,039	MAQ2	2720	1.15	93.60	93.60	57.181	2300/4160	
250	185	3600	5009/10	25036ET3X5009-W50MV	$42,512	MAQ2	4272	1.15	95.00	95.00	64.159	2300/4160	
		1800	5009/10	25018ET3X5009-W50MV	$42,249	MAQ2	4457	1.15	95.00	95.00	70.035	2300/4160	
		1200	5009/10	25012ET3X5009-W50MV	$48,810	MAQ2	4567	1.15	95.00	95.00	70.035	2300/4160	
300	220	3600	5009/10	30036ET3X5009-W50MV	$51,698	MAQ2	4345	1.15	95.00	95.00	64.159	2300/4160	
		1800	5009/10	30018ET3X5009-W50MV	$47,239	MAQ2	4283	1.15	95.00	95.00	70.035	2300/4160	
		1200	5009/10	30012ET3X5009-W50MV	$55,371	MAQ2	4821	1.15	95.00	95.00	70.035	2300/4160	
350	260	3600	5009/10	40036ET3X5009-W50MVR	$61,669	MAQ2	4707	1.15	95.00	95.00	64.159	2300/4160	47
		1800	5009/10	40018ET3X5009-W50MVR	$60,848	MAQ2	4814	1.15	95.00	95.00	70.035	2300/4160	
		1200	5009/10	35012ET3X5009-W50MV	$61,532	MAQ2	4825	1.15	95.00	95.00	70.035	2300/4160	
400	300	3600	5009/10	40036ET3X5009-W50MV	$61,669	MAQ2	4707	1.15	95.00	95.00	64.159	2300/4160	47
		1800	5009/10	40018ET3X5009-W50MV	$60,848	MAQ2	4814	1.15	95.00	95.00	70.035	2300/4160	
		1200	5809/10	40012ET3X5809-W50MV	$68,812	MAQ2	6503	1.15	95.00	95.00	77.964	2300/4160	
450	330	3600	5809/10	50036ET3X5809-W50MVR	$79,517	MAQ2	5915	1.15	95.20	95.20	71.089	2300/4160	
		1800	5009/10	50018ET3X5009-W50MVR	$76,398	MAQ2	5008	1.15	95.00	95.00	70.035	2300/4160	47
		1200	5809/10	50012ET3X5809-W50MVR	$89,970	MAQ2	6479	1.15	95.00	95.00	77.964	2300/4160	
500	370	3600	5809/10	50036ET3X5809-W50MV	$79,517	MAQ2	5915	1.15	95.40	95.40	71.089	2300/4160	
		1800	5009/10	50018ET3X5009-W50MV	$76,398	MAQ2	5008	1.15	95.00	95.00	70.035	2300/4160	47
		1200	5809/10	50012ET3X5809-W50MV	$89,970	MAQ2	6479	1.15	95.00	95.00	77.964	2300/4160	
550	400	3600	5809/10	60036ET3X5809-W50MVR	$86,864	MAQ2	6359	1.15	95.40	95.40	71.089	2300/4160	47
		1800	5809/10	60018ET3X5809-W50MVR	$91,633	MAQ2	6351	1.15	95.40	95.40	77.964	2300/4160	
		1200	5809/10	60012ET3X5809-W50MVR	$105,217	MAQ2	6803	1.15	95.00	95.00	77.964	2300/4160	47;48
600	440	3600	5809/10	60036ET3X5809-W50MV	$86,864	MAQ2	6359	1.15	95.40	95.40	71.089	2300/4160	47
		1800	5809/10	60018ET3X5809-W50MV	$91,633	MAQ2	6351	1.15	95.40	95.40	77.964	2300/4160	
		1200	5809/10	60012ET3X5809-W50MV	$105,217	MAQ2	6803	1.15	95.00	95.00	77.964	2300/4160	47;48
650	480	1800	6806/07	70018ET3X6806-W50MVR	$105,814	MAQ2	7686	1.15	95.40	95.40	78.224	2300/4160	47
		1200	6808/09	70012ET3X6808-W50MVR	$117,307	MAQ2	9123	1.15	95.40	95.40	84.129	2300/4160	47
700	515	1800	6806/07	70018ET3X6806-W50MV	$105,814	MAQ2	7686	1.15	95.40	95.40	78.224	2300/4160	47
		1200	6808/09	70012ET3X6808-W50MV	$117,307	MAQ2	9123	1.15	95.40	95.40	84.129	2300/4160	47
750	560	1800	6808/09	80018ET3X6808-W50MVR	$114,209	MAQ2	8704	1.15	95.40	95.40	84.129	2300/4160	
800	590	1800	6808/09	80018ET3X6808-W50MV	$114,209	MAQ2	8704	1.15	95.40	95.40	84.129	2300/4160	

Please contact WEG for 50Hz MV motors from stock.

Data subject to change without notice.

Add-On Modifications

NEMA FRAME			L447/9T 2P - MV	L447/9T 4/6P - MV	5000 2P - MV	5000 4/6P - MV	5800 2P - MV	5800 4/6P - MV	6800 4/6P - MV
REPLATE	**ADD CUSTOMER PART NUMBER AND / OR OTHER CHANGES SUCH AS VOLTAGE, HZ, ETC.**								
MOD. NUMBER	**NAMEPLATE**								
N-30	Main Nameplate Change - Stainless Steel	NET	$35	$35	$35	$35	$35	$35	$35
N-40	Additional Nameplate - Stainless Steel	NET	$35	$35	$35	$35	$35	$35	$35
ELECTRICAL ADD-ON'S	**INSTALLATION OF ENCODER**								
E-100	Installation of Encoder - Dynapar HSD38 1024PPR & 5/8" stub shaft	LIST	$1,145	$1,145	$1,876	$1,876	$2,176	$2,176	$2,426
E-120	Installation of Encoder - Additional Kit Required for Motors with Forced Ventilation (Motors designed with Ball Bearing at DE side)	LIST	$680	$680	$1,064	$1,064	$1,157	$1,157	$1,203
E-130	Installation of Encoder - Additional Kit Required for Motors with Forced Ventilation (Motors designed with Roller Bearing at DE side)	LIST	N/A	$876	N/A	$1,089	N/A	$1,218	$1,263
C-FLANGE KIT	**INSTALLATION OF C-FLANGE KITS**								
C-90	Installation of C-FLANGE	LIST	$1,793	$1,793	$3,071	$3,071	$3,517	$3,517	$4,190
D-FLANGE KIT	**INSTALLATION OF D-FLANGE KITS**								
D-130	Installation of D-FLANGE	LIST	$1,711	$1,711	$2,613	$2,613	$3,041	$3,041	$3,421
COOLING	**INSTALLATION OF BLOWER KIT (FORCED VENTILATION) AND CHANGE DIRECTION OF ROTATION**								
F-210	Forced Ventilation (230/460V 60Hz): Blower Cooling (w/o Encoder) (Safe Area)	LIST	$2,449	$2,449	$4,300	$4,300	$4,697	$4,697	$5,030
F-220	Forced Ventilation (240/480V 60Hz): Blower Cooling (w/o Encoder) (Hazardous Area)	LIST	N/A	N/A	$4,576	$4,576	$5,118	$5,118	$5,625
F-230	Change Direction of Rotation - CCW External Fan for 2P motors	LIST	N/A	N/A	$1,064	N/A	$1,170	N/A	N/A
BEARINGS	**BEARING CHANGE OUTS & SHAFT GROUNDING MODIFICATION**								
B-200	Ball to Roller Bearing Conversion	LIST	N/A	$1,813	N/A	$2,544	N/A	$2,714	$2,934
B-250	Installation of Helwig Grounding Brush (Includes Brush and Brush Holder - DE only)	LIST	$1,385	$1,385	$1,385	$1,385	$1,385	$1,385	$1,385
MOUNTING	**TERMINAL BOX**								
M-280	F1 to F2 Mounting Conversion	LIST	$524	$524	$839	$839	$839	$839	$839
M-330	Oversized NEMA Type II Main Terminal Box	LIST	N/A	N/A	$3,504	$3,504	$3,504	$3,504	$3,504
M-320	Install terminal block in terminal box	LIST	N/A	N/A	$2,790	$2,790	$2,790	$2,790	$2,790

Electrical Data 2300V

Rated Output		Full Load Speed (RPM)	NEMA Frame	Locked Rotor Current (2300V)		Full Load Amps	2300V		
HP	kW			kVA Code	Il/In		Full Load Torque - Tn (lb.ft)	Locked Rotor Torque (Tl/Tn)	Breakdown torque (Tb/Tn)
150	110	3586	L447/9TS	M	11.4	36.1	220	2.40	3.70
		1789	L447/9T	K	8.0	37.9	440	1.80	2.80
		1189	L447/9T	K	7.7	40.4	662	2.00	2.80
200	150	3580	L447/9TS	K	8.7	47.1	293	1.80	2.80
		1786	L447/9T	G	6.0	48.4	588	1.40	2.10
		1185	L447/9T	G	6.0	51.6	886	1.50	2.10
250	185	3574	5009/10	G	6.4	55.5	367	1.00	2.10
		1783	5009/10	G	6.2	58.2	736	1.40	2.20
		1188	5009/10	G	5.7	61.9	1105	1.40	2.10
300	220	3575	5009/10	G	6.5	65.3	441	1.00	2.10
		1782	5009/10	G	6.2	68.4	884	1.40	2.10
		1183	5009/10	G	5.8	73.6	1332	1.60	2.20
350	260	3575	5009/10	H	7.4	78.1	514	1.10	2.40
		1787	5009/10	H	6.7	83.8	1029	1.70	2.40
		1184	5009/10	G	5.7	87.0	1552	1.70	2.30
400	300	3571	5009/10	G	6.5	89.1	588	1.00	2.10
		1785	5009/10	G	6.0	94.4	1177	1.50	2.10
		1189	5809/10	G	5.8	100	1767	1.50	2.10
450	330	3575	5809/10	H	7.2	98.9	661	1.30	2.65
		1789	5009/10	H	6.9	105	1321	0.90	2.65
		1192	5809/10	H	6.5	113	1982	1.65	2.30
500	370	3571	5809/10	G	6.5	109	735	1.20	2.40
		1787	5009/10	G	6.3	116	1469	0.80	2.40
		1191	5809/10	G	6.0	124	2205	1.50	2.10
550	400	3578	5809/10	H	7.4	121	807	1.20	2.50
		1788	5809/10	H	7.0	125	1615	1.85	2.40
		1193	5809/10	H	6.8	137	2421	1.00	2.70
600	440	3576	5809/10	G	6.7	132	881	1.10	2.30
		1786	5809/10	G	6.5	136	1764	1.70	2.20
		1192	5809/10	G	6.3	147	2643	0.90	2.50
650	480	1789	6806/07	H	6.9	152	1908	1.50	2.45
		1193	6808/09	H	7.0	149	2861	0.90	2.45
700	515	1789	6806/07	G	6.5	161	2055	1.40	2.30
		1193	6808/09	G	6.5	158	3081	0.85	2.30
750	560	1789	6808/09	H	6.8	180	2201	1.60	2.35
800	590	1789	6808/09	G	6.5	187	2348	1.50	2.20

Please contact WEG for 50Hz MV motors from stock.

continued on next page

Data subject to change without notice.

Electrical Data 2300V (continued)

Rated Output		Efficiency (2300V)			Power Factor (2300V)			Moment of Inertia WK2 (lb.ft2)	Approx. Weight (lb)	Approx. Sound Level dB(A)
		% of Full load								
HP	kW	50	75	100	50	75	100			
150	110	90.00	92.20	93.20	0.63	0.75	0.82	37.7	2536	88
		91.00	92.60	93.30	0.60	0.72	0.78	94.9	2386	79
		91.50	93.20	93.60	0.52	0.65	0.73	114.0	2498	71
200	150	92.40	93.60	94.10	0.72	0.82	0.85	37.7	2536	88
		92.60	93.80	93.80	0.70	0.79	0.83	94.9	2386	79
		92.80	93.60	93.60	0.63	0.73	0.78	114.0	2498	71
250	185	93.60	94.10	95.00	0.83	0.87	0.88	83.1	3803	79
		93.00	94.10	95.00	0.70	0.81	0.84	94.9	3971	79
		93.60	94.50	95.00	0.66	0.76	0.79	138.0	4081	77
300	220	93.60	94.10	95.00	0.83	0.88	0.89	88.5	3876	79
		93.60	94.10	95.00	0.74	0.82	0.85	114.0	3797	79
		93.60	94.50	95.00	0.66	0.74	0.79	159.0	4335	77
350	260	93.60	94.50	95.00	0.81	0.86	0.88	99.7	4238	79
		93.60	94.10	95.00	0.67	0.77	0.82	157.0	4328	79
		93.60	94.50	95.00	0.64	0.75	0.79	168.0	4339	77
400	300	94.10	94.50	95.00	0.83	0.87	0.89	99.7	4238	79
		94.10	94.50	95.00	0.72	0.80	0.84	157.0	4328	79
		94.10	94.50	95.00	0.67	0.76	0.79	382.0	5980	77
450	330	94.20	94.90	95.20	0.83	0.87	0.88	142.0	5415	82
		94.10	95.00	95.00	0.70	0.79	0.83	166.0	4522	79
		93.60	94.50	95.00	0.60	0.71	0.77	384.0	5956	77
500	370	94.50	95.00	95.40	0.85	0.89	0.89	142.0	5415	82
		94.50	95.00	95.00	0.73	0.81	0.84	166.0	4522	79
		94.10	94.50	95.00	0.63	0.73	0.79	384.0	5956	77
550	400	94.30	95.10	95.40	0.78	0.85	0.87	159.0	5859	82
		94.50	95.20	95.40	0.72	0.80	0.84	275.0	5828	82
		93.10	94.30	95.00	0.59	0.70	0.77	418.0	6280	77
600	440	94.70	95.40	95.40	0.80	0.86	0.88	159.0	5859	82
		95.00	95.40	95.40	0.75	0.81	0.85	275.0	5828	82
		93.30	94.50	95.00	0.62	0.73	0.79	418.0	6280	77
650	480	94.30	94.80	95.40	0.71	0.80	0.83	427.0	7074	82
		94.80	95.40	95.40	0.74	0.82	0.85	724.0	8500	81
700	515	94.50	95.00	95.40	0.73	0.81	0.84	427.0	7074	82
		95.00	95.40	95.40	0.75	0.83	0.86	724.0	8500	81
750	560	94.90	95.40	95.40	0.71	0.79	0.82	534.0	8081	82
800	590	95.00	95.40	95.40	0.72	0.80	0.83	534.0	8081	82

Please contact WEG for 50Hz MV motors from stock.

Electrical Data - 4160V

Rated Output		Full Load Speed (RPM)	NEMA Frame	Locked Rotor Current (4160V)		Full Load Amps	4160V		
HP	kW			kVA Code	Il/In		Full Load Torque - Tn (lb.ft)	Locked Rotor Torque (Tl/Tn)	Breakdown torque (Tb/Tn)
150	110	3587	L447/9TS	N	11.4	20.5	220	2.60	4.00
		1790	L447/9T	K	8.3	21.3	440	2.00	3.00
		1190	L447/9T	L	8.1	23.3	662	2.10	3.00
200	150	3582	L447/9TS	N	8.7	26.4	293	2.00	3.00
		1787	L447/9T	H	6.5	27.4	588	1.50	2.30
		1186	L447/9T	H	6.5	29.3	886	1.60	2.30
250	185	3576	5009/10	H	7.5	30.7	367	1.10	2.20
		1785	5009/10	H	6.8	32.2	735	1.50	2.30
		1189	5009/10	H	6.4	34.6	1104	1.60	2.20
300	220	3576	5009/10	H	7.3	36.1	441	1.10	2.30
		1784	5009/10	G	6.5	38.3	883	1.50	2.20
		1185	5009/10	H	6.4	41.2	1329	1.70	2.30
350	260	3577	5009/10	J	8.2	43.2	514	1.25	2.50
		1788	5009/10	J	7.5	47.5	1028	1.90	2.50
		1185	5009/10	H	6.3	48.7	1551	1.80	2.50
400	300	3573	5009/10	H	7.2	49.2	588	1.10	2.20
		1786	5009/10	H	6.7	52.8	1176	1.70	2.20
		1190	5809/10	H	6.3	56.2	1765	1.70	2.20
450	330	3577	5809/10	J	8.2	54.7	661	1.40	2.85
		1789	5009/10	J	7.6	58.8	1321	1.00	2.85
		1192	5809/10	J	7.0	64.3	1982	1.75	2.45
500	370	3574	5809/10	H	7.4	60.5	735	1.30	2.60
		1787	5009/10	H	6.8	65.1	1469	0.90	2.60
		1191	5809/10	H	6.5	70.2	2205	1.60	2.20
550	400	3580	5809/10	J	8.0	68.5	807	1.30	2.70
		1789	5809/10	J	7.8	70.1	1614	1.95	2.50
		1193	5809/10	J	7.1	77.9	2421	1.10	2.90
600	440	3578	5809/10	H	7.2	74.4	881	1.20	2.50
		1787	5809/10	H	7.0	76.2	1763	1.80	2.30
		1192	5809/10	H	6.5	83.5	2643	1.00	2.70
650	480	1790	6806/07	J	7.6	85.2	1907	1.60	2.55
		1193	6808/09	J	7.8	83.1	2861	1.00	2.55
700	515	1790	6806/07	H	6.8	90.3	2054	1.50	2.40
		1193	6808/09	H	7.0	88.1	3081	0.95	2.40
750	560	1790	6808/09	J	7.5	101	2200	1.80	2.45
800	590	1790	6808/09	H	7.0	105	2347	1.70	2.30

Please contact WEG for 50Hz MV motors from stock.

continued on next page

Data subject to change without notice.

Electrical Data 4160V (continued)

Rated Output		Efficiency (4160V)			Power Factor (4160V)			Moment of Inertia WK2 (lb.ft2)	Approx. Weight (lb)	Approx. Sound Level dB(A)
		% of Full load								
HP	kW	50	75	100	50	75	100			
150	110	89.60	91.90	93.00	0.60	0.72	0.80	37.7	2536	88
		91.00	92.60	93.30	0.57	0.69	0.77	94.9	2386	79
		91.50	93.20	93.60	0.48	0.61	0.70	114.0	2498	71
200	150	92.10	93.40	94.00	0.70	0.80	0.84	37.7	2536	88
		92.60	93.80	93.80	0.67	0.77	0.81	94.9	2386	79
		92.80	93.60	93.60	0.59	0.70	0.76	114.0	2498	71
250	185	93.60	94.10	95.00	0.83	0.87	0.88	83.1	3803	79
		93.00	94.10	95.00	0.70	0.81	0.84	94.9	3971	79
		93.60	94.50	95.00	0.63	0.74	0.78	138.0	4081	77
300	220	93.60	94.10	95.00	0.83	0.87	0.89	88.5	3876	79
		93.60	94.10	95.00	0.72	0.81	0.84	114.0	3797	79
		93.60	94.50	95.00	0.63	0.73	0.78	159.0	4335	77
350	260	93.60	94.50	95.00	0.80	0.86	0.88	99.7	4238	79
		93.60	94.10	95.00	0.65	0.76	0.80	157.0	4328	79
		93.60	94.50	95.00	0.61	0.71	0.78	168.0	4339	77
400	300	94.10	94.50	95.00	0.82	0.87	0.89	99.7	4238	79
		94.10	94.50	95.00	0.70	0.79	0.83	157.0	4328	79
		94.10	94.50	95.00	0.64	0.74	0.78	382.0	5980	77
450	330	94.20	94.90	95.20	0.82	0.87	0.88	142.0	5415	82
		94.10	95.00	95.00	0.67	0.77	0.82	166.0	4522	79
		93.60	94.50	95.00	0.58	0.68	0.75	384.0	5956	77
500	370	94.50	95.00	95.40	0.84	0.89	0.89	142.0	5415	82
		94.50	95.00	95.00	0.71	0.80	0.83	166.0	4522	79
		94.10	94.50	95.00	0.60	0.71	0.77	384.0	5956	77
550	400	94.30	95.10	95.40	0.75	0.82	0.85	159.0	5859	82
		94.50	95.20	95.40	0.71	0.79	0.83	275.0	5828	82
		93.10	94.30	95.00	0.56	0.68	0.75	418.0	6280	77
600	440	94.70	95.40	95.40	0.77	0.83	0.86	159.0	5859	82
		95.00	95.40	95.40	0.73	0.80	0.84	275.0	5828	82
		93.30	94.50	95.00	0.58	0.71	0.77	418.0	6280	77
650	480	94.30	94.80	95.40	0.69	0.79	0.82	427.0	7074	82
		94.80	95.40	95.40	0.72	0.81	0.84	724.0	8500	81
700	515	94.50	95.00	95.40	0.71	0.80	0.83	427.0	7074	82
		95.00	95.40	95.40	0.74	0.82	0.85	724.0	8500	81
750	560	94.90	95.40	95.40	0.68	0.77	0.81	534.0	8081	82
800	590	95.00	95.40	95.40	0.70	0.79	0.82	534.0	8081	82

Please contact WEG for 50Hz MV motors from stock.

Mechanical Data

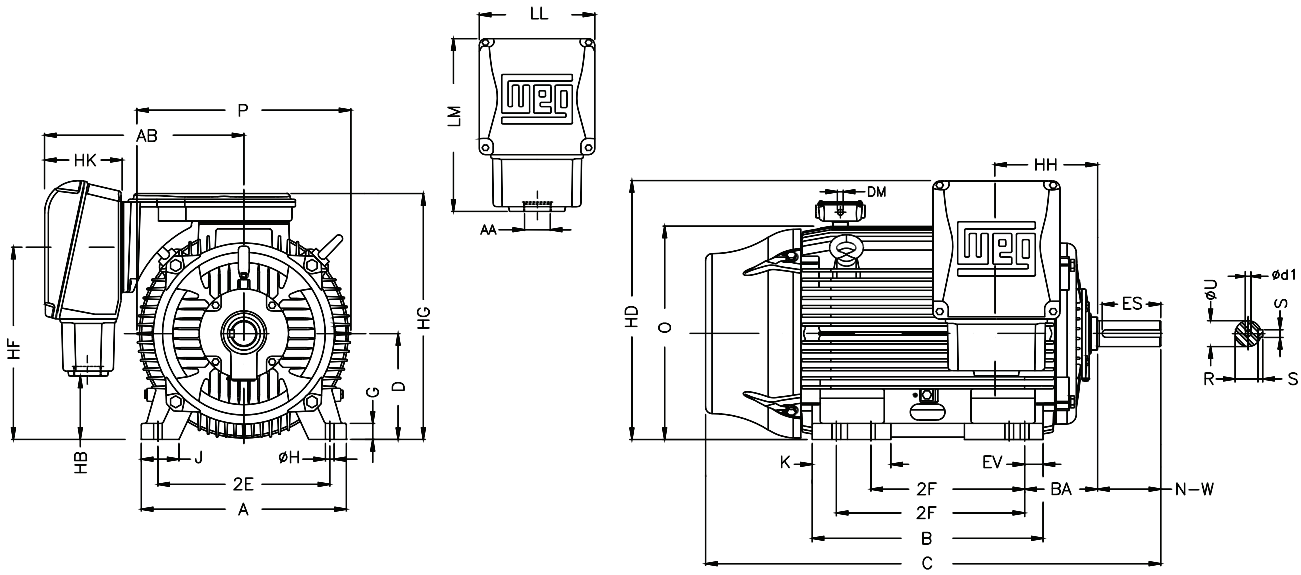

NEMA	Mounting														
	FRAME	2E	2F	EV	H	BA	A	B	C	D	G	J	K	O	P
	L447/9T	18	20	2.638	0.81	7.5	21.929	31.535	57.181	11	1.63	3.937	8.78	23.874	25.866
	L447/9TS		25						53.431						

NEMA	KEYWAY				SHAFT EXTENSION	
	FRAME	S	R	ES	N-W	U
	L447/9T	0.875	2.88	7.087	8.5	3.375
	L447/9TS	0.625	2.021	3	4.75	2.375

NEMA	TERMINAL BOX													BEARINGS	
	FRAME	AB	HB	HD	HF	HG	HH	HK	LL	LM	AA	DM	d1	D.E.	N.D.E.
	L447/9T	28.543	2.125	30.906	21.024	28.236	11.5	14.291	18.11	28.74	1 x NPT 3”	2 x NPT 3/4”	DUNC 3/4”-10	6322-C3	6319-C3
	L447/9TS													6314-C3	6314-C3

Data subject to change without notice.

Mechanical Data

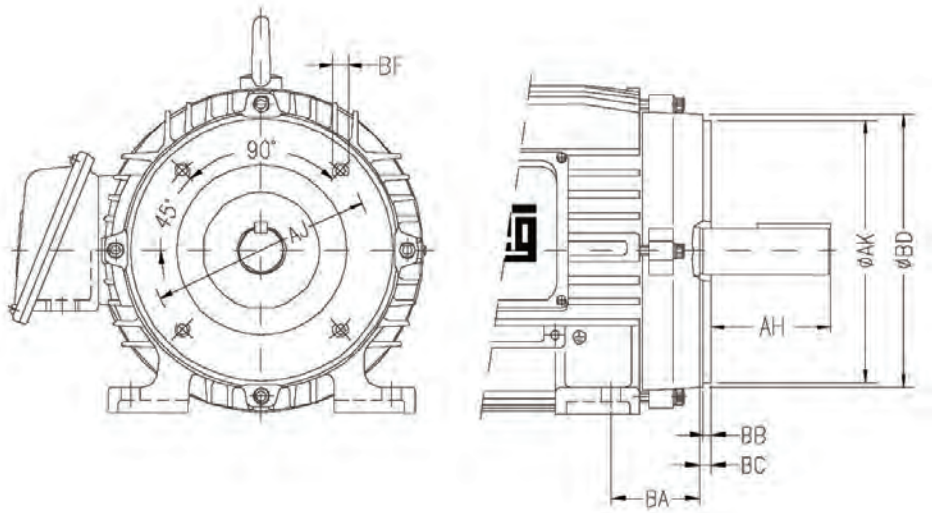

NEMA	"C" FLANGE DIMENSIONS								
	FRAME	BA	AJ	AK	BD	BF	BB	BC	AH
	L447/9T	7.5	14	16	17.91	UNC 5/8" x 11	0.25	0.25	8.25
	L447/9TS								

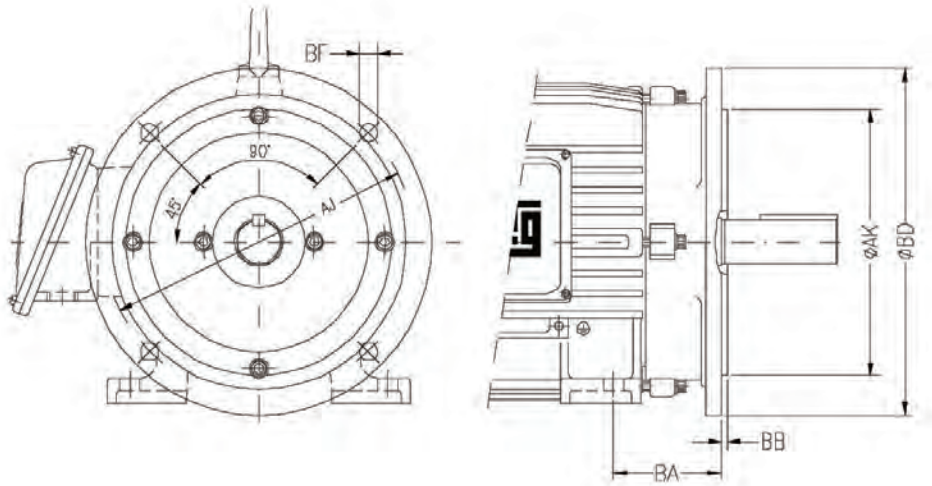

NEMA	"D" FLANGE DIMENSIONS						
	FRAME	BA	AJ	AK	BD	BF	BB
	L447/9T	7.5	20	18	21.65	0.828	0.203
	L447/9TS						

Mechanical Data

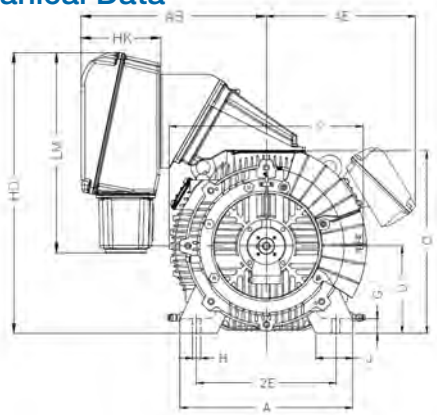

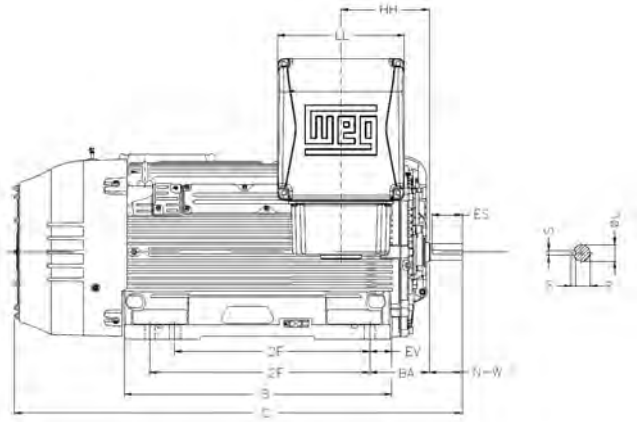

MOUNTING

	FRAME	Speed	2E	2F	EV	H	BA	A	B	C	D	G	J	K	O	P
NEMA	5009/10	2P	20	28.000 / 32.000	3.151	1.181	8.503	24.724	38.585	64.159	12.5	2.073	5.279	11.12	26.083	27.795
		4P & 6P					8.504			70.035						
	5809/10	2P	23	32.000 / 36.000	3.491	1.181	10	29.506	42.415	71.089	14.5	2.498	5.793	11.596	30.051	31.086
		4P & 6P								77.964						
	6806/07	4P	27	28.000 / 32.000	4.575	1.417	11.5	33.071	42.226	78.224	17	1.967	7.064	11.74	34.52	34.646
	6808/09	4P & 6P		36.000 / 40.000					48.126	84.129				11.737		

	KEYWAY					SHAFT EXTENSION	
	FRAME	Speed	S	R	ES	N-W	U
NEMA	5009/10	2P	0.625	2.02	4.331	4.75	2.375
		4P & 6P	0.875	3.134	9.055	10.625	3.625
	5809/10	2P	0.625	2.021	4.331	4.75	2.375
		4P & 6P	1	3.309	9.843	11.625	3.875
	6806/07	4P	1	3.817	9.843	11.625	4.375
	6808/09	4P & 6P					

	TERMINAL BOX											
	FRAME	Speed	AB	AE	HD	HH	HK	LL	LM	AA	DM	d1
NEMA	5009/10	2P	26.536	21.343	40.196	12.638	11.41	18.11	28.712	1 x NPT 3”	3 x NPT 3/4”	DUNC 3/4”-10
		4P & 6P										DUNC 7/8”-9
	5809/10	2P	26.69	22.397	44.168	13.74	11.41	18.11	28.74	1 x NPT 3”	3 x NPT 3/4”	DUNC 3/4”-10
		4P & 6P										DUNC 7/8”-9
	6806/07	4P & 6P	29.901	23.697	48.588	13.862	11.41	18.11	28.72	1 x NPT 3”	3 x NPT 3/4”	DUNC 1”-8
	6808/09											

	BEARINGS			
	FRAME	Speed	D.E.	N.D.E.
NEMA	5009/10	2P	6314-C3	6314-C3
		4P & 6P	6320-C3	6316-C3
	5809/10	2P	6314-C3	6314-C3
		4P & 6P	6322-C3	6319-C3
	6806/07	4P & 6P	6324-C3	6319-C3
	6808/09			

Data subject to change without notice.

Mechanical Data

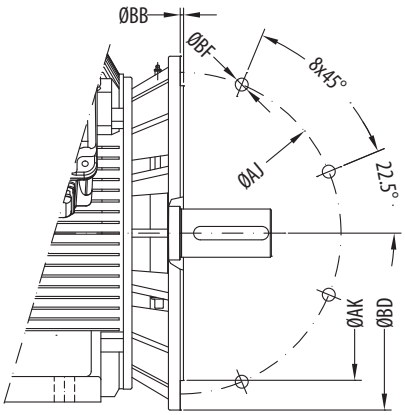

NEMA	"D" FLANGE DIMENSIONS						
	FRAME	FLANGE	BB	AJ	AK	BD	BF
	5009/10	D-558	0.250	22.000	18.000	24.000	0.827
	5809/10	D-762	0.250	30.000	28.000	32.000	0.827
	6806/07	FF-940	0.250	35.252	33.250	37.250	1.000
	6808/09	FF-1080	0.250	35.252	33.250	37.250	1.000

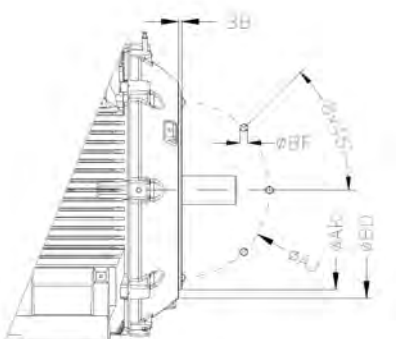

NEMA	"C" FLANGE DIMENSIONS						
	FRAME	FLANGE	BB	AJ	AK	BD	BF
	5009/10	FC 368	0.25	14.5	16.5	17.9	UNC 5/8"-11 x 8
	5809/10		0.25	14.5	16.5	17.9	UNC 1"-8 x 8
	6806/7	FC 533	0.25	21	23	24.9	UNC 1"-8 x 8
	6808/9	FC 533	0.25	21	23	24.9	UNC 1"-8 x 8

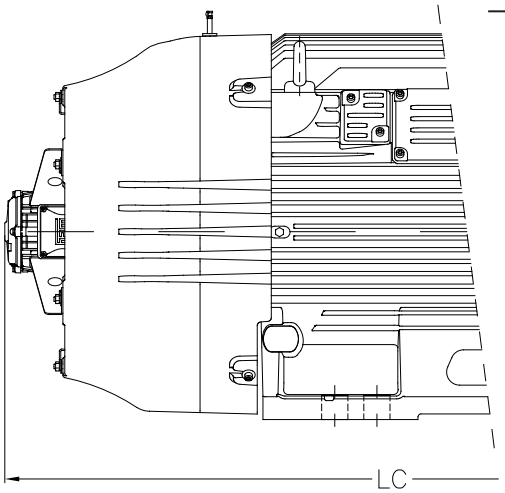

NEMA	MOTOR TOTAL LENGTH WITH INSTALLED BLOWER		
	FRAME	SPEED	C
	5009/10	2P	70.577
		4P & 6P	76.432
	5809/10	2P	77.486
		4P & 6P	84.361
	6806/07	4P	84.621
	6808/09	4P & 6P	90.527

Medium Voltage Worksheet

LET US KNOW ABOUT YOUR APPLICATION

Please fill in and provide the below information (as much as possible) to ensure WEG's motor design matches your particular application.

Date: / /

Submitted by: E-mail:

Customer/ Project: Specification:

Customer ref.:

MAIN FEATURES:

Quantity: _____ Voltage: _____

Number of Poles: _____ Frequency: 60 Hz

Output: _____(kW/ HP)

ADDITIONAL FEATURES:

Cooling System: TEFC

Service Factor:_____

Degree of Protection: IP55

Starting Method: _____

Temperature Rise: _____

Ambient Temperature: _____

Hazardous Area: Zone/ Division: _____

Rotation (facing DE): _____

Duty Cycle: _____

Starting Method: _____

Speed Range (V.F.D.): _____

Coupling: _____

Altitude: _____

Group/ Class: _____ Temp. Class: _____

Pulley and Belt Coupling:

Coupling Type:

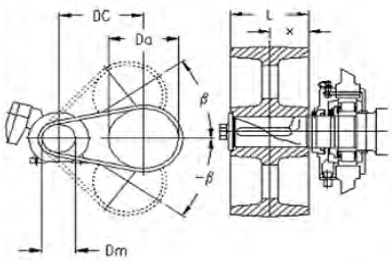

*DM = [in]

*Da = [in]

*DC = [in]

*L = [in]

*x = [in]

*ß = [degrees]

*Weight = [lb]

*Number of Belts =

*Type of Belt =

* Just for Pulley & Belt Coupling

LOAD DATA:

Driven Machine: _____

Rotation (rpm): _____

Inertia (J = sq.ft.lb): _____

Torque x Speed Curve type: _____

Absorbed Power: _____

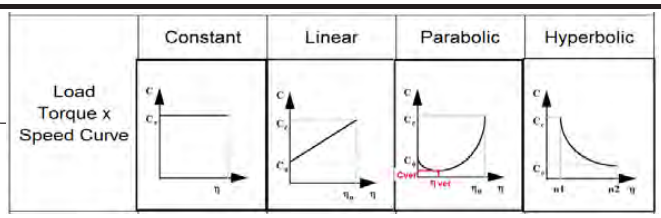

ADD-ON MODIFICATIONS (Check as necessary):

- ☐ Main nameplate change
- ☐ Encoder Dynapar HSD38 1024ppr
- ☐ D-Flange
- ☐ Change Direction of Roation (2P motors only)
- ☐ Helwig Shaft grounding brush
- ☐ Oversized NEMA Type II Main terminal box
- ☐ Additional Nameplate
- ☐ Flange
- ☐ Forced Ventilation (Blower Cooling)
- ☐ Ball to Roller Bearing conversion
- ☐ F1 to F2 mounting conversion
- ☐ Terminal Block inside Main terminal box

Data subject to change without notice.

W60 - WPII Medium Voltage Motors

Standard Features:

- Frames: 5010/11, 5810/11, 6810/11
- Voltage: 2300/4000V
- Frequency: 60 Hz – 2P Stock Available
- Insulation Class F
- Form Wound Stator
- Global VPI Impregnation
- Class B Temperature Rise @ 1.0 SF
- Class F Temperature Rise @ 1.15 SF
- Fabricated Copper Bar Rotor
- C5 Laminations
- IP24 Enclosure, IP55 Bearings
- F1 Mounting (F2 Optional)
- Starting DOL and VFD
- Direct Coupled
- Direction of Rotation: CW Facing DE, CCW Available thru Modification
- Altitude: 3300 f.a.s.l.
- Ambient Temperature: -20°C to +40°C
- NEMA Premium® Efficiency
- Sleeve Bearings
- 4140 Shaft Steel
- Final Color: Blue (RAL 5009)
- Severe Duty Paint System 212P
- Grounding Lugs on Each Side of Frame
- Noise 85 dBA @ 3 Feet*
- API 541 Vibration Levels
- 0.005” Foot Flatness
- Fully Rotatable Main Terminal Box
- Vertical Jack Screws and Dowel Holes

Standard Accessories:

- Two Insulated Bearings
- Glass Trico Oilers
- Stainless Steel Screens and Filters
- RTD Pt100 Temperature Detectors
  - » Stator 2 per phase
  - » Bearing 1 per bearing
- Motor Space Heater, 110/230V
- Main Terminal Box, Space Heater

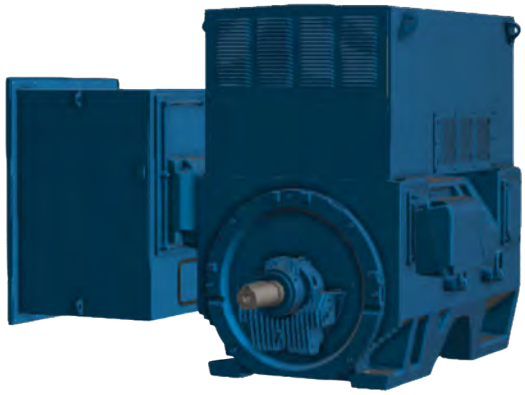

V.F.D. Operation Features:

- 1.00SF at V.F.D. Operation
- Class B Temperature Rise @ 1.00SF
- Suitable for V.F.D. Operation
  10:1 VT with Class B temperature rise
  2:1 CT with Class F temperature rise

Note: A method of reducing common mode voltages from motor terminals must be utilized.

Hazardous Area Features:

- 1.15 SF at Hazardous Area
- Class B Temperature Rise @ 1.0 SF
- CSA Certification: Class I, Div. 2, Groups B, C and D, T3 (CSA)

Warranty:

- 12 Months from Manufacturing Date or 36 Months when purchased with WEG Drive

Drop-in Replacement Capability:

Frame	XBA
5010/11	14.25” to 15.75”
5810/11	16.75” to 17.00”
6810/11	18.50”

Note: Special attention to Reciprocating Compressors applications where the motor design must be evaluated and confirmed in a case by case basis.

Medium Voltage Motors

HP	kW	RPM	NEMA Frame	Rotation	Catalog Number	List Price	Multiplier	Approx. Shipping Weight (lbs)	Service Factor	FL. Eff. (%)		"C" Dimension (in)	Voltage (V)	Notes
										2300V	4000V			
500	370	3600	5010/11	CW	50036WT3X5010-W60C1	$111,720	MAQ	4900	1.15	95.0	95.0	65.431	2300/4000	
500	370	3600	5010/11	CCW	50036WT3X5010-W60C2		MAQ	4900	1.15	95.0	95.0	65.431	2300/4000	
600	440	3600	5010/11	CW	70036WT3X5010-W60C1-R1	$116,200	MAQ	5800	1.15	95.0	95.0	65.431	2300/4000	Derated 700 HP
600	440	3600	5010/11	CCW	70036WT3X5010-W60C2-R1		MAQ	5800	1.15	95.0	95.0	65.431	2300/4000	Derated 700 HP
700	515	3600	5010/11	CW	70036WT3X5010-W60C1	$116,200	MAQ	5800	1.15	95.0	95.0	65.431	2300/4000	
700	515	3600	5010/11	CCW	70036WT3X5010-W60C2		MAQ	5800	1.15	95.0	95.0	65.431	2300/4000	
800	590	3600	5010/11	CW	90036WT3X5010-W60C1-R1	$119,982	MAQ	6200	1.15	95.0	95.0	65.937	2300/4000	Derated 900 HP
800	590	3600	5010/11	CCW	90036WT3X5010-W60C2-R1		MAQ	6200	1.15	95.0	95.0	65.937	2300/4000	Derated 900 HP
900	660	3600	5010/11	CW	90036WT3X5010-W60C1	$119,982	MAQ	6200	1.15	95.0	95.0	65.937	2300/4000	
900	660	3600	5010/11	CCW	90036WT3X5010-W60C2		MAQ	6200	1.15	95.0	95.0	65.937	2300/4000	
1000	750	3600	5810/11	CW	100036WT3X5810-W60C1	$140,436	MAQ	5600	1.15	95.0	95.0	72.036	2300/4000	
1000	750	3600	5810/11	CCW	100036WT3X5810-W60C2		MAQ	5600	1.15	95.0	95.0	72.036	2300/4000	
1250	900	3600	L5810/11	CW	150036WT3X5810-W60C1-R1	$149,090	MAQ	7800	1.15	95.4	95.4	68.459	2300/4000	Derated 1500 HP
1250	900	3600	L5810/11	CCW	150036WT3X5810-W60C2-R1		MAQ	7800	1.15	95.4	95.4	68.459	2300/4000	Derated 1500 HP
1500	1100	3600	L5810/11	CW	150036WT3X5810-W60C1	$149,090	MAQ	7800	1.15	95.4	95.4	68.459	2300/4000	
1500	1100	3600	L5810/11	CCW	150036WT3X5810-W60C2		MAQ	7800	1.15	95.4	95.4	68.459	2300/4000	
1750	1320	3600	6810/11	CW	175036WT3X6810-W60C1	$176,628	MAQ	12200	1.15	95.8	95.8	81.680	2300/4000	
1750	1320	3600	6810/11	CCW	175036WT3X6810-W60C2		MAQ	12200	1.15	95.8	95.8	81.680	2300/4000	
2000	1500	3600	6810/11	CW	225036WT3X6810-W60C1-R1	$196,158	MAQ	12200	1.15	95.8	95.8	81.680	2300/4000	Derated 2250 HP
2000	1500	3600	6810/11	CCW	225036WT3X6810-W60C2-R1		MAQ	12200	1.15	95.8	95.8	81.680	2300/4000	Derated 2250 HP
2250	1650	3600	6810/11	CW	225036WT3X6810-W60C1	$196,158	MAQ	12200	1.0	95.8	95.8	81.680	2300/4000	
2250	1650	3600	6810/11	CCW	225036WT3X6810-W60C2		MAQ	12200	1.0	95.8	95.8	81.680	2300/4000	

Data subject to change without notice.

Electrical Data - 2300V

Rated Output		Full Load Speed (RPM)	NEMA Frame	Locked Rotor Current (2300/4000V)		Full Load Amps	2300/4000V		
HP	kW			kVA Code	II/In		Full Load Torque - Tn (lb.ft)	Locked Rotor Torque (Tl/Tn)	Breakdown torque (Tb/Tn)
500	370	3571	5010/11	G	7.0	106.0	738	0.80	2.40
600	440	3571	5010/11	G	7.0	129.0	882	0.90	2.60
700	515	3566	5010/11	F	6.1	151.0	1027	0.80	2.50
800	590	3575	5010/11	G	7.0	173.0	1172	0.90	2.90
900	660	3571	5010/11	F	6.2	194.0	1324	0.80	2.70
1000	750	3572	5810/11	G	6.5	223.0	1468	0.80	2.20
1250	900	3576	L5810/11	H	8.0	269.0	1837	0.90	3.00
1500	1100	3568	L5810/11	G	6.5	329.0	2206	0.80	2.40
1750	1320	3582	6810/11	G	7.0	376.0	2568	0.80	2.60
2000	1500	3583	6810/11	H	7.9	428.0	2930	0.80	2.80
2250	1650	3581	6810/11	G	7.5	470.0	3298	0.75	2.60

Electrical Data - 4000V

Rated Output		Full Load Speed (RPM)	NEMA Frame	Locked Rotor Current (2300/4000V)		Full Load Amps	2300/4000V		
HP	kW			kVA Code	II/In		Full Load Torque - Tn (lb.ft)	Locked Rotor Torque (Tl/Tn)	Breakdown torque (Tb/Tn)
500	370	3571	5010/11	G	7.0	60.9	738	0.80	2.40
600	440	3571	5010/11	G	7.0	74.3	882	0.90	2.60
700	515	3566	5010/11	F	6.1	86.9	1027	0.80	2.50
800	590	3575	5010/11	G	7.0	99.6	1172	0.90	2.90
900	660	3571	5010/11	F	6.2	112.0	1324	0.80	2.70
1000	750	3572	5810/11	G	6.5	128.0	1468	0.80	2.20
1250	900	3576	L5810/11	H	8.0	155.0	1837	0.90	3.00
1500	1100	3568	L5810/11	G	6.5	189.0	2206	0.80	2.40
1750	1320	3582	6810/11	G	7.0	216.0	2568	0.80	2.60
2000	1500	3583	6810/11	H	7.9	246.0	2930	0.80	2.80
2250	1650	3581	6810/11	G	7.5	270.0	3298	0.75	2.60

Electrical Data - 2300/4000V (continued)

Rated Output		Efficiency (2300/4000V)			Power Factor (2300/4000V)			Moment of Inertia WK2 (lb. ft2)	Approx. Weight (lb)	Approx. Sound Level dB(A)
		% of Full load								
HP	kW	50	75	100	50	75	100			
500	370	94.8	95.0	95.0	0.89	0.92	0.92	118.0	4900	85
600	440	94.5	95.0	95.0	0.87	0.89	0.90	124.0	5800	85
700	515	94.5	95.0	95.0	0.87	0.89	0.90	124.0	5800	85
800	590	94.5	95.0	95.0	0.86	0.89	0.90	132.0	6200	85
900	660	94.5	95.0	95.0	0.86	0.89	0.90	132.0	6200	85
1000	750	95.4	95.0	95.0	0.85	0.88	0.89	94.0	5600	85
1250	900	94.5	95.0	95.4	0.81	0.86	0.88	206.0	7800	85
1500	1100	94.5	95.0	95.4	0.85	0.87	0.88	206.0	7800	85
1750	1320	95.4	95.8	95.8	0.85	0.90	0.92	314.0	12200	85
2000	1500	95.0	95.8	95.8	0.82	0.87	0.88	313.0	12200	85
2250	1650	95.4	95.8	95.8	0.85	0.90	0.92	313.0	12200	85

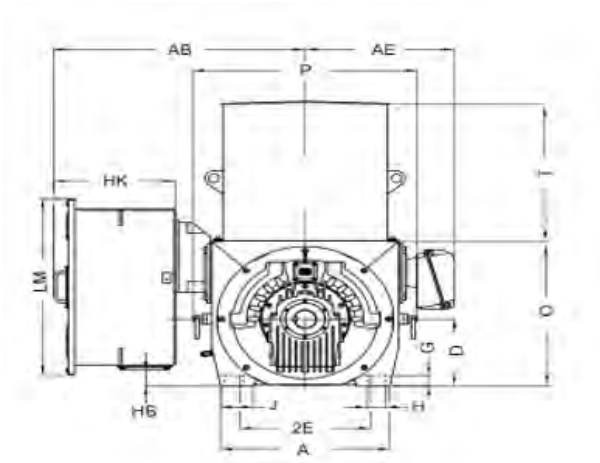

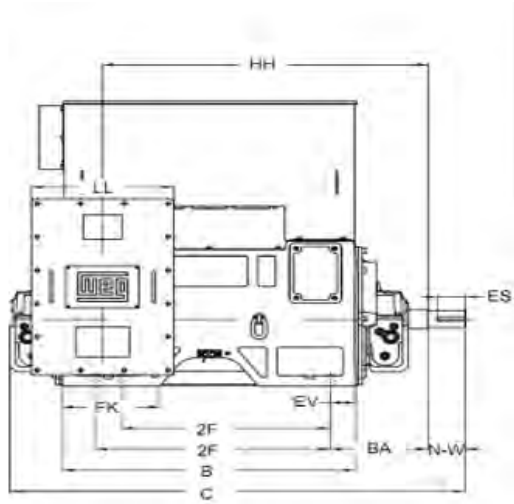

	MOUNTING										
	FRAME	2E	2F	A	B	C	D	G	J	O+T	AB+AE
NEMA	5010	20.000	32.000	25.957	44.983	65.431	12.500	2.004	5.052	53.185	71.537
	5011	20.000	36.000	25.957	44.983	65.431	12.500	2.004	5.052	53.185	71.537
	5810	23.000	36.000	30.250	50.442	72.036	14.500	2.530	5.632	57.438	77.463
	5811	23.000	40.000	30.250	50.442	72.036	14.500	2.530	5.632	57.438	77.463
	L5810	23.000	36.000	31.339	46.440	68.459	14.500	2.427	5.697	57.297	78.620
	L5811	23.000	40.000	31.339	46.440	68.459	14.500	2.427	5.697	57.297	78.620
	6810	27.000	45.000	33.820	58.071	81.680	17.000	3.196	7.028	66.947	79.035
	6811	27.000	50.000	33.820	58.071	81.680	17.000	3.196	7.028	66.947	79.035

	KEYWAY			SHAFT EXTENSION		
	FRAME	S	R	ES	BA*	N-W	U
NEMA	5010	0.625	2.831	4.331	8.50 to 10	5.750	2.625
	5011	0.625	2.831	4.331	8.50 to 10	5.750	2.625
	5810	0.875	2.880	5.512	10 to 10.25	6.750	3.375
	5811	0.875	2.880	5.512	10 to 10.25	6.750	3.375
	L5810	0.875	3.260	5.512	10 to 10.25	6.750	3.375
	L5811	0.875	3.260	5.512	10 to 10.25	6.750	3.375
	6810	0.875	3.260	5.512	11.750	6.750	3.500
	6811	0.875	3.260	5.512	11.750	6.750	3.500

BA - Frame has slotted feet to vary dimension from motor mounting bolt to end of shaft*

	TERMINAL BOX							BEARINGS	
	FRAME	AB	HB	HH	HK	LM	d1	D.E.	N.D.E.
NEMA	5010/11	48.608	4.406	17.231	28.254	39.961	DUNC 3/4"-10	MNLB 9S-80	FNLB 9-80
	5810/11	51.571	7.390	17.300	28.254	39.961	DUNC 7/8"-9	MNLB 9S-80	FNLB 9-80
	L5810/11	52.150	7.732	17.923	28.254	39.961	DUNC 7/8"-9	MNLB 9S-80	FNLB 9-80
	6810/11	52.357	11.476	19.686	28.254	39.961	DUNC 7/8"-9	MNLB 9S-80	FNLB 9-80

Notes:

SSW7000 Series – Medium Voltage Soft-Starter

WEG's SSW7000 medium voltage solid-state soft starter is an industrial general-purpose starter package for starting and protecting medium voltage (MV) AC motors.

Designed to be rugged, reliable and safe, the SSW7000 is a simple and cost effective solution for demanding applications.

Key Features & Advantages

- 4160V and 2300V models in stock
- Four 160 V and 2300 V models in stock (NEMA 12 and NEMA 3R) up to 3000 HP (higher voltages and powers available)
- Suitable for service entrance
- Motor protections active in both DOL and RUN modes eliminating the need for expensive motor protection relays for backup protection
- Pump control utilizes a specific algorithm for centrifugal pumps designed to minimize water hammer and pressure overshoots
- SoftPLC function with license-free software
- Flexible Torque Control (FTC) allows adjusting starting torque limit curve with three points (ideal for quadratic loads)
- Motor thermal protection via PT100 monitoring available (up to eight channels)

Accessories

- PT100 monitoring (8x channels)
- Network communication modules
- FLASH memory module

Features that make a difference:

- Assembled and stocked in the US
- NEMA 12 and NEMA 3R enclosures available
- Emergency DOL start capability (ATL bypass)
- Oriented startup for easy commissioning
- UL 347 listed
- Ground fault monitoring standard

Data subject to change without notice.

SSW7000C Catalog Number Sequence

SSW7000C	125	T	4	11	N2

Protection Degree
N2 = NEMA 12
N3 = NEMA 3R

Current Rating
125 = 125 Amps
180 = 180 Amps
250 = 250 Amps
360 = 360 Amps

Supply Phases
T = Three-phase

Rated Voltage
2 = 2.3 kV
4 = 4.16 kV

Single-Phase Control Supply
11 = 110 VAC, 1 ph

Chart intended as reference only and not to create part numbers.

Rating

Power Supply	Model	Rated Current	Motor Power		List Price	Multiplier
			HP[1]	kW		
NEMA 12						
2300V, 3PH, 60 Hz	SSW7000C125T211N2	125 A	550	410	**$55,750**	E3
	SSW7000C180T211N2	180 A	750	560	**$58,665**	
	SSW7000C250T211N2	250 A	1100	800	**$65,195**	
	SSW7000C360T211N2	360 A	1500	1100	**$67,430**	
4160V, 3PH, 60 Hz	SSW7000C125T411N2	125 A	1000	750	**$63,950**	
	SSW7000C180T411N2	180 A	1500	1100	**$67,195**	
	SSW7000C250T411N2	250 A	2000	1500	**$75,235**	
	SSW7000C360T411N2	360 A	3000	2250	**$77,980**	
NEMA 3R						
2300V, 3PH, 60 Hz	SSW7000C125T211N3	125 A	550	410	**$60,820**	E3
	SSW7000C180T211N3	180 A	750	560	**$63,725**	
	SSW7000C250T211N3	250 A	1100	800	**$70,255**	
	SSW7000C360T211N3	360 A	1600	1190	**$73,020**	
4160V, 3PH, 60 Hz	SSW7000C125T411N3	125 A	1000	750	**$69,015**	
	SSW7000C180T411N3	180 A	1500	1100	**$72,250**	
	SSW7000C250T411N3	250 A	2000	1500	**$80,295**	
	SSW7000C360T411N3	360 A	3000	2250	**$83,550**	

Notes:
1) The motor power ratings given above are based on WEG 4-pole motors, 4.16kV, 60-Hz, PF=0.87, Eff=0.97, SF=1. For applications with high overloads or special starting conditions, contact WEG's sales force. Current Rating of SSW7000C must be calculated based on the information on load type, load speed/torque curve and required number of starts per hour.All models are available in 220V, 1Ph control voltage.

NEMA Frame PMDC Motors – 90/180VDC – General Purpose A-319
NEMA Frame PMDC Motors – 12/24VDC – General Purpose A-319
Dimensions A-320
Brushes for RAE "MT" Motors A-320
Subfractional PMDC Motors – 90/180VDC – TENV - General Purpose A-321
Subfractional PMDC Motors – 12/24VDC - TENV – General Purpose A-321
Dimensions. A-322

Parallel Shaft Gearmotors

G209 Series Gearbox & Dimensions A-323
GIL 100 Series Gearbox & Dimensions A-324
GIL 200 Series Gearbox & Dimensions A-325

DC Motors and Gearmotors

WEG DC motors and gearmotors are designed for industrial-strength, continuous duty applications. Our broad range of PMDC motors, gearmotors and wound field motors can be modified to meet your specific application requirements. We offer off-the-shelf products and custom OEM designs. All the standard WEG DC motors and gearmotors are interchangeable with most major brands and are UL/ CSA approved to meet the needs of most general industries.

WEG DC products have been used in many industries for several decades, including:

- Packaging Equipment
- Material Handling
- Office Machinery
- Pumps
- Door/ Gate Openers
- Food Processing
- Lawn/ Garden
- Medical/ Lab Equipment

WEG can provide a complete custom industrial-duty DC-powered solution for all your application needs by developing a custom designed control for the motor. Our team has been developing DC controls for many industries for decades. Let us help you differentiate your product by working to your specifications. For more information on our DC control capabilities, please contact your local sales person or contact us at 815-385-3500.

NEMA Frame MT Motors

- SCR Rated
- 20:1 Constant torque speed range
- 1.0 Service Factor - Continuous Duty (S1)
- Rolled Steel Frame Construction
- C-Face with Removable bolt-on base
- Class F Insulation
- Ambient temperature up to 40°C
- Permanently lubriccated ball bearings
- High Starting Torque and Increased Efficiency
- UL Recognized / CSA Approved and CE Marked
- Replaceable brushes

NEMA Frame PMDC Motors - 90/180VDC - General Purpose

HP	Catalog Number	Full Load RPM	NEMA Frame	Voltage (DC)	Enclosure	Full Load Amps (A)	App. Weight	"C" Dimension Max	Drawing No.	List Price	Mult. Symbol
1/4	MT-084	2500	56C	90	TEFC	2.6	19	9.63	1	$516	DC1
	MT-031	1750	56C	90	TEFC	2.90	19	9.63	1	$516	DC1
	MT-041	1750	56C	180	TEFC	1.30	19	9.63	1	$516	DC1
1/3	MT-033	1750	56C	90	TEFC	3.70	20	9.63	1	$563	DC1
	MT-042	1750	56C	180	TEFC	1.85	20	9.63	1	$563	DC1
1/2	MT-085	2500	56C	90	TEFC	5.30	22	10.25	1	$644	DC1
	MT-032	1750	56C	90	TEFC	5.20	22	10.25	1	$644	DC1
	MT-043	1750	56C	180	TEFC	2.60	22	10.25	1	$644	DC1
3/4	MT-079	2500	56C	90	TEFC	7.80	28	10.25	1	$791	DC1
	MT-080	2500	56C	180	TEFC	3.80	28	10.25	1	$791	DC1
	MT-035	1750	56C	90	TEFC	7.80	28	11.67	1	$791	DC1
	MT-044	1750	56C	180	TEFC	3.90	28	11.67	1	$791	DC1
1	MT-086	2500	56C	90	TEFC	10.00	32	12.34	1	$930	DC1
	MT-087	2500	56C	180	TEFC	5.00	32	12.34	1	$930	DC1
	MT-034	1750	56C	90	TEFC	10.4	32	12.34	1	$930	DC1
	MT-037	1750	56C	180	TEFC	5.2	32	12.34	1	$930	DC1
1-1/2	MT-088	2500	56C	180	TEFC	8.0	47	11.08	3	$1,590	DC1
	MT-089	1750	56C	180	TEFC	8.0	47	11.08	3	$1,590	DC1
	MT-046	1750	145TC	90	TEFC	16.0	47	13.20	2	$1,430	DC1
	MT-038	1750	145TC	180	TEFC	8.0	47	13.20	2	$1,430	DC1
2	MT-090	2500	56C	180	TEFC	10.0	65	13.68	3	$2,200	DC1
	MT-048	1750	145TC	90	TEFC	19.0	65	13.75	2	$1,540	DC1
	MT-039	1750	145TC	180	TEFC	9.5	65	13.68	2	$1,540	DC1
3	MT-040	1750	145TC	180	TEFC	14.0	72	14.21	2	$2,180	DC1

Note: 1/4-1/2HP models have 4.45" frame diameter.
3/4 & 1HP models have 4.85" frame diameter.

NEMA Frame PMDC Motors - 12/24VDC - General Purpose

HP	Catalog Number	Full Load RPM	NEMA Frame	Voltage (DC)	Enclosure	Full Load Amps (A)	App. Weight	"C" Dimension Max	Drawing No.	List Price	Mult. Symbol
1/4	MT-065	1750	56C	12	TENV	21.00	18	7.80	1	$613	DC1
	MT-066	1750	56C	24	TENV	10.50	18	7.80	1	$613	DC1
1/3	MT-067	1750	56C	12	TENV	28.00	19	7.80	1	$674	DC1
	MT-068	1750	56C	24	TENV	14.00	19	7.80	1	$645	DC1
1/2	MT-069	1750	56C	12	TENV	40.80	22	8.66	1	$702	DC1
	MT-070	1750	56C	24	TENV	20.50	22	8.66	1	$669	DC1
3/4	MT-071	1750	56C	12	TENV	61.20	28	9.84	1	$883	DC1
	MT-072	1750	56C	24	TENV	28.30	28	9.84	1	$841	DC1
1	MT-073	1750	56C	12	TENV	83.0	33	12.63	1	$1,059	DC1
	MT-074	1750	56C	24	TENV	41.5	33	12.63	1	$976	DC1

Note: For drawings see next page.

NEMA Frame Motor Dimensions

Drawing 1

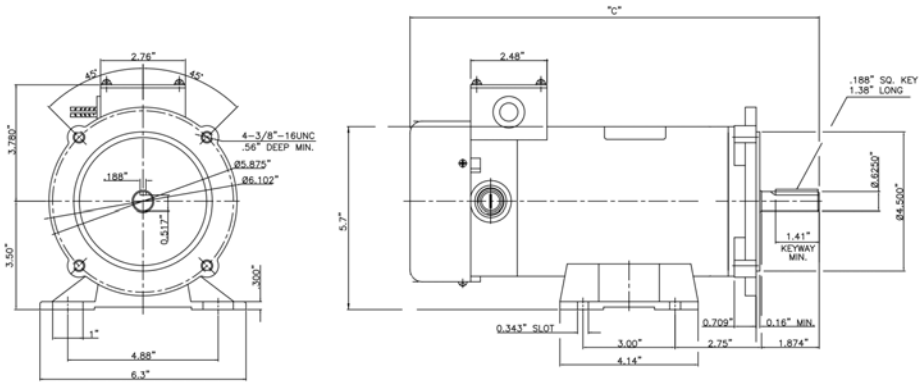

Drawing 2

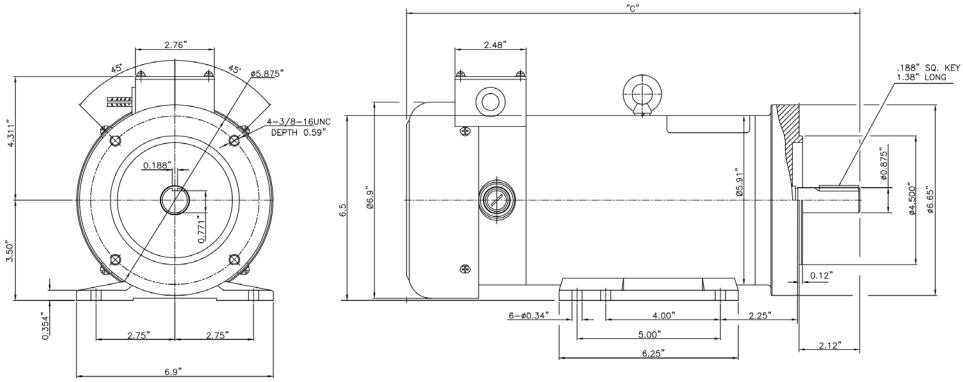

Drawing 3

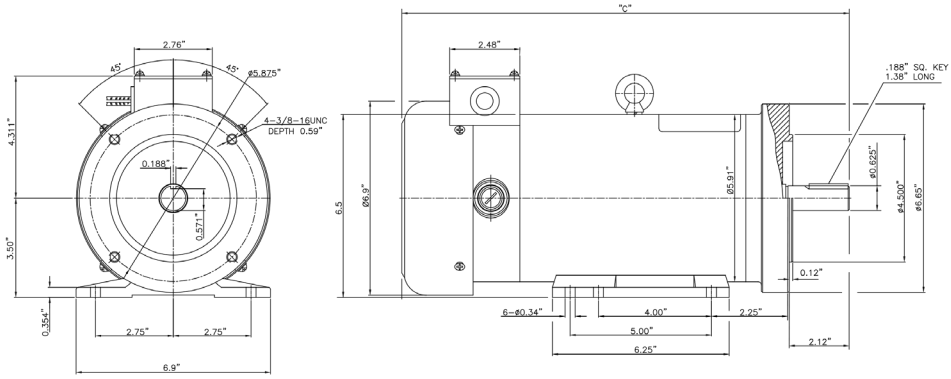

Direct Interchange to Many Popular Brands in the Industry

BRUSHES FOR RAE "MT" MOTORS

- Price includes two brushes (enough for one motor).

RAE PART NUMBER	MOTOR FRAME SIZE	MOTOR HP RANGE	List Price	Multipiler
MT-56BS	56C	¼ - ½ HP	**$68**	DC1
MT-75BS	56C	¾ - 1 HP	**$68**	DC1
MT-145BS	145C	1.5 – 3 HP	**$82**	DC1

WEG sub-fractional PMDC motors offer equipment designers a robust product choice with a flexible and compact design rated for continuous duty and compatible for use with PWM and SCR control inputs. All stock models are built in USA and are standard with long-life, easily replaceable brushes. Our team can easily modify any of our designs to meet specific application requirements.

Standard Features

- Compact design
- High starting torque
- Double shielded Ball Bearings
- Dynamically Balanced Armature
- TENV Design
- Square End Bells
- Long-life brushes
- Class "F" Insulation
- High Energy Ceramic Magnets
- Reversible rotation

Optional Features

- Round endbells
- Conduit box or cord
- Paint color
- Ratings from 1/50HP - 1/4HP
- Speed up to 5000RPM
- Voltage: 12-200VDC
- IP rating up to IP67 with internal brushes
- AC rectified input
- Dual shaft - for encoders or brakes

Subfractional PMDC Motors - 90/180VDC - TENV - General Purpose

HP	Input RPM	Torque (oz-in)	Catalog Number	Stock Model	Arm. Voltage DC	FL Amps DC	L1 Max (in.)	Line 2 (in.)	Motor OD (in.)	Drawing No.	Approx Shipping Weight (lbs.)	List Price	Multiplier	Dayton Cross Reference	Leeson Cross Ref.
1/53	2500	8	MH1602	Y	90	0.26	4.44	4.18	2.37	1	3.0	**$258**	DC2	3XE21	N/A
1/20	1800	21	MH1601	Y	90	0.50	4.94	4.68	2.37	2	3.0	**$258**	DC2	3XE22; 4Z142	M1110003
1/18	1800	31	MH4101	Y	90	0.75	4.92	5.00	3.12	3	5.0	**$337**	DC2	4Z141	M1120013
1/8	1800	70	MH4301	Y	90	1.50	6.92	6.92	3.12	3	5.3	**$337**	DC2	4Z140	M1120027
1/6	1800	93	MH4401	Y	90	1.81	7.92	7.92	3.12	3	6.5	**$344**	DC2	4Z528	M1120042
1/6	1800	90	MH4402	Y	180	0.90	7.92	8.00	3.12	3	5.5	**$344**	DC2	1Z851	M1120043

Subfractional PMDC Motors - 12/24VDC - TENV - General Purpose

HP	Input RPM	Torque (oz-in)	Catalog Number	Stock Model	Arm. Voltage DC	FL Amps DC	L1 Max (in.)	Line 2 (in.)	Motor OD (in.)	Drawing No.	Approx Shipping Weight (lbs.)	List Price	Multiplier	Dayton Cross Reference	Leeson Cross Ref.
1/40; 1/20	1800 / 4300	13	ML1601	Y	12 / 24	2.40	4.44	4.18	2.37	1	3.0	**$228**	DC2	3XE19; 4Z145	N/A
1/20; 1/9	1800 / 4000	29	ML1602	Y	12 / 24	5.10	4.94	4.68	2.37	2	3.5	**$245**	DC2	3XE20	M1110006
1/14; 1/6	1750 / 4200	41	ML4102	Y	12 / 24	6.90	4.92	5.00	3.12	3	5.0	**$351**	DC2	4Z144	M1120040
1/7; 1/4	1750 / 3900	90	ML4301	Y	12 / 24	14.00	6.92	6.92	3.12	3	5.5	**$351**	DC2	4Z143	M1120044
1/6; 1/3	1800 / 4200	102	ML4401	Y	12 / 24	16.50	7.92	7.92	3.12	3	5.5	**$372**	DC2	4Z529	M1120046

For drawings see next page.

Drawing 1

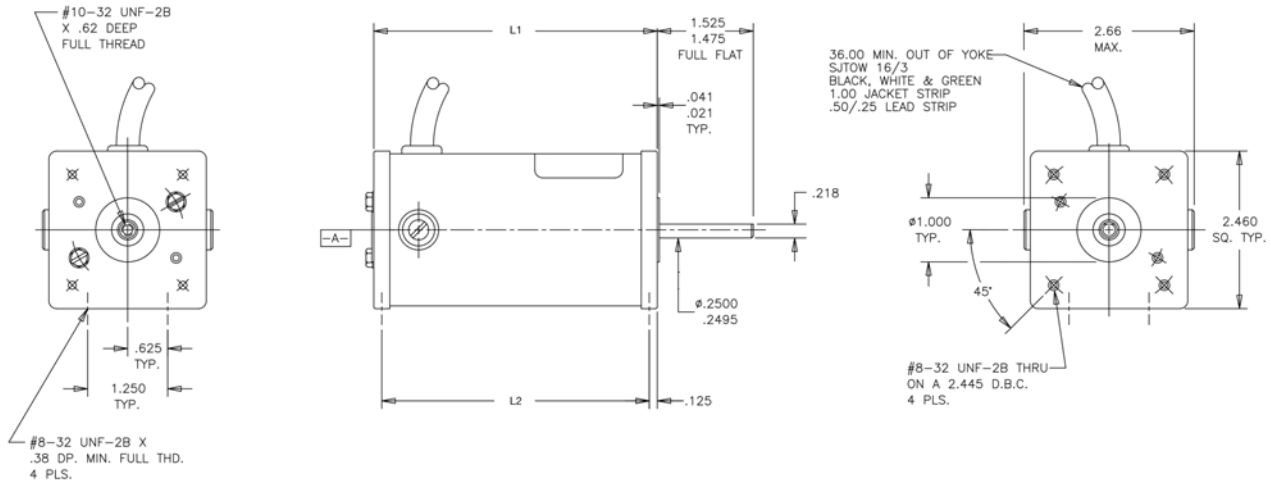

Drawing 2

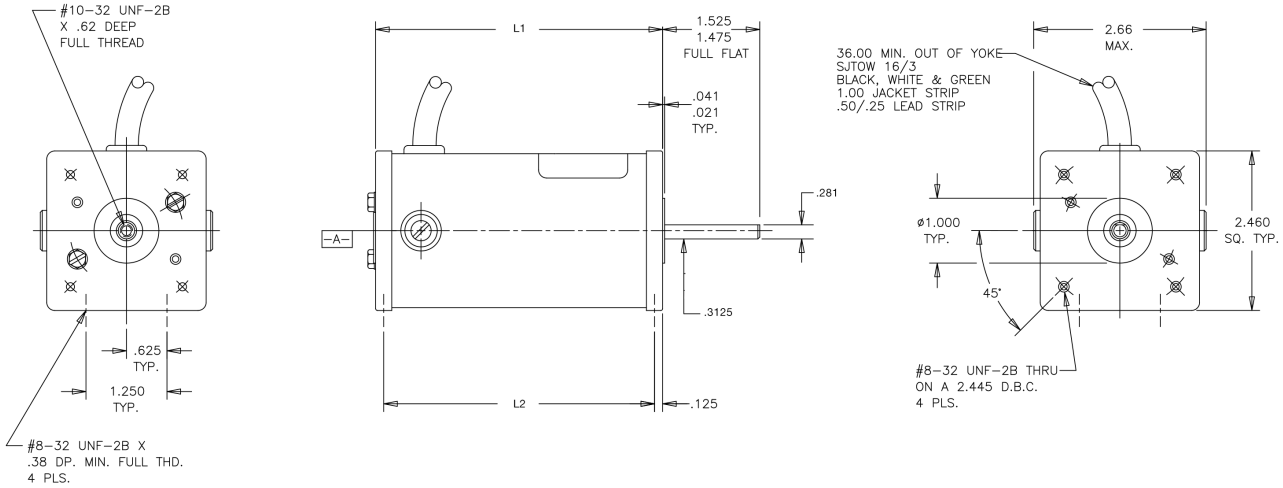

Drawing 3

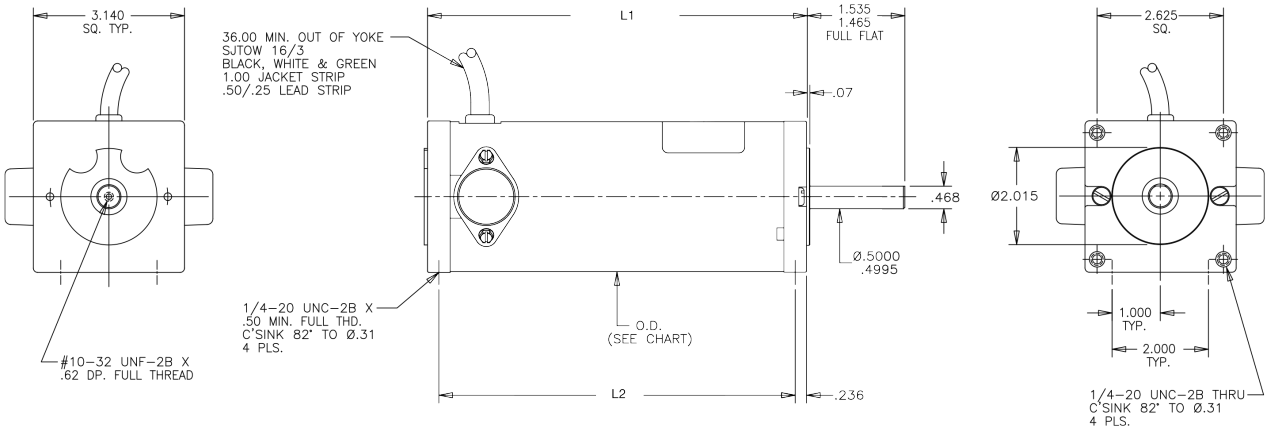

G209 Series

Standard Features

- Compact design with high starting torque
- Double shielded Ball Bearings (motor)
- Dynamically Balanced Armature
- TENV Design
- Long-life brushes
- Class "F" Insulation
- High Energy Ceramic Magnets
- Reversible rotation

Optional Features

- Conduit box or cord
- Voltage: 12-200VDC
- IP rating up to IP67 with internal brushes
- AC rectified input
- Dual shaft - for encoders or brakes
- Special paint/finish

G209 Series - 90VDC - TENV - General Purpose

Output RPM	Torque (lb-in)	HP	Catalog Number	Stock Model	Arm. Voltage DC	FL Amps DC	Ratio	Overall Length less Shaft(in.)	Approx Shipping Weight (lbs.)	List Price	Multiplier
7	50	0.02	GH2091	Y	90	0.15	386	5.83	6	$430	DC2
11	50	0.02	GH2092	Y	90	0.19	269	5.83	6	$430	DC2
21	50	0.03	GH2093	Y	90	0.28	120	5.83	6	$430	DC2
29	40	0.04	GH2094	Y	90	0.31	83.5	5.83	6	$430	DC2
47	26	0.04	GH2095	Y	90	0.33	55	5.83	6	$430	DC2
94	13	0.04	GH2096	Y	90	0.31	26	5.83	6	$430	DC2
71	40	0.07	GH2097	N*	90	0.62	26	7.51	6	$442	DC2

G209 Series - 12VDC - TENV - General Purpose

Output RPM	Torque (lb-in)	HP	Catalog Number	Stock Model	Arm. Voltage DC	FL Amps DC	Ratio	Overall Length less Shaft(in.)	Approx Shipping Weight (lbs.)	List Price	Multiplier
77	13	0.03	GL2091	N*	12	2.1	26	5.33	6	$430	DC2
39	26	0.03	GL2092	N*	12	2.2	55	5.33	6	$430	DC2
24	40	0.03	GL2093	N*	12	2.1	83.5	5.33	6	$430	DC2
17	50	0.03	GL2094	N*	12	1.9	120	5.33	6	$430	DC2
9	50	0.02	GL2095	N*	12	1.3	269	5.33	6	$430	DC2
6	50	0.02	GL2096	N*	12	1	386	5.33	6	$430	DC2

** Check Availability*

G209 Series Dimensions

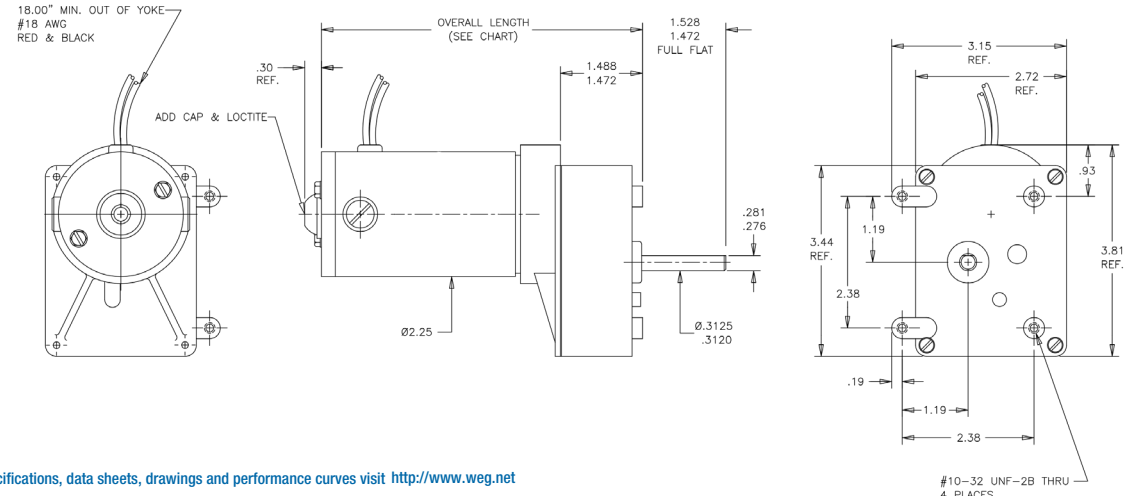

GIL100 Series

WEG GIL100 Series PMDC gearmotors offer equipment designers a robust product choice with a flexible and compact design rated for continuous duty and compatible for use with PWM and SCR control inputs. All stock models are built in USA and are standard with long-life, easily replaceable brushes. Our team can easily modify any of our designs to meet specific application requirements.

Standard Features

- Compact design with high starting torque
- Double shielded Ball Bearings (motor)
- Sleeve bearings (gearbox)
- Dynamically Balanced Armature
- TENV Design
- Long-life brushes
- Class “F” Insulation
- High Energy Ceramic Magnets
- Reversible rotation
- Interchangeable with most popular brands

Optional Features

- Conduit box or cord
- Voltage: 12-200VDC
- IP rating up to IP67 with internal brushes
- AC rectified input
- Dual shaft - for encoders or brakes
- Special paint/ finish

GIL100 Series - 90VDC - TENV - General Purpose

Output RPM	Torque (lb-in)	HP	Catalog Number	Stock Model	Arm. Voltage DC	FL Amps DC	Ratio	Overall Length less Shaft(in.)	Motor OD (in.)	Approx Shipping Weight (lbs.)	List Price	Multiplier
3	100	0.02	GH1019	N*	90	0.15	488	6.60	2.37	6	$460	DC2
4	100	0.02	GH1001	Y	90	0.19	488	6.60	2.37	6	$460	DC2
5	160	0.05	GH1018	N*	90	0.25	339	6.60	2.37	6	$460	DC2
6	100	0.02	GH1002	Y	90	0.23	339	6.60	2.37	6	$460	DC2
10	100	0.02	GH1003	Y	90	0.3	172	7.36	2.37	6	$470	DC2
19	150	0.05	GH1017	N*	90	0.72	172	7.36	2.37	6	$470	DC2
20	100	0.06	GH1007	Y	90	0.5	102	6.60	2.37	6	$460	DC2
30	100	0.06	GH1008	Y	90	0.72	79	7.36	2.37	6	$470	DC2
37	150	0.1	GH1016	Y	90	1.2	102	7.36	2.37	6	$470	DC2
37	74	0.04	GH1009	N*	90	0.67	79	7.36	2.37	6	$470	DC2
40	50	0.06	GH1004	N*	90	0.5	52	7.36	2.37	6	$470	DC2
65	30	0.06	GH1005	Y	90	0.77	52	7.36	2.37	6	$470	DC2
60	56	0.06	GH1010	Y	90	0.46	31	7.36	2.37	6	$470	DC2
71	40	0.06	GH1011	N*	90	1.29	52	7.36	2.37	6	$470	DC2
71	83	0.09	GH1015	Y	90	0.64	31	7.36	2.37	6	$470	DC2
90	20	0.06	GH1006	Y	90	0.46	16	7.36	2.37	6	$470	DC2
100	36	0.06	GH1012	Y	90	0.79	31	7.36	2.37	6	$470	DC2
139	20	0.04	GH1013	Y	90	1.19	24	7.36	2.37	6	$470	DC2
139	42	0.09	GH1014	N*	90	0.63	16	7.36	2.37	6	$470	DC2

*Check Availability

GIL100 Dimensions

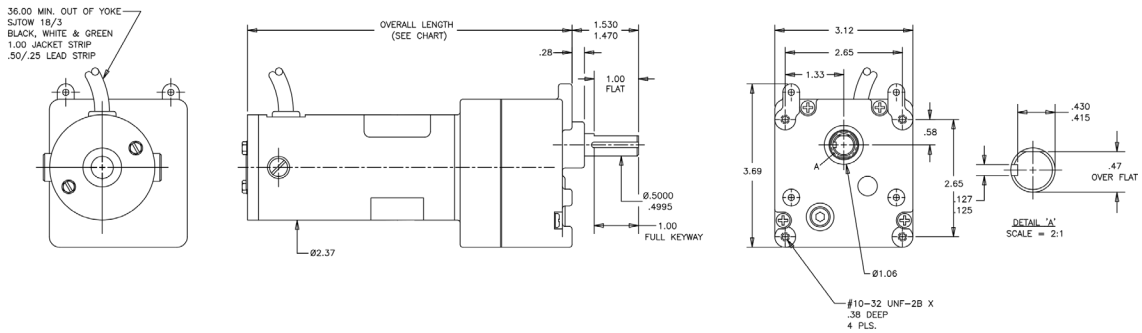

For detailed specifications, data sheets, drawings and performance curves visit http://www.weg.net

Data subject to change without notice.

GIL200 Series

WEG GIL200 Series PMDC gearmotors offer equipment designers a robust product choice with a flexible and compact design rated for continuous duty and compatible for use with PWM and SCR control inputs. All stock models are built in USA and are standard with long-life, easily replaceable brushes. Our team can easily modify any of our designs to meet specific application requirements.

Standard Features

- Compact design with high starting torque
- Double shielded Ball Bearings (motor)
- Sleeve bearings (gearbox)
- Dynamically Balanced Armature
- TENV Design
- Long-life brushes
- Class "F" Insulation
- High Energy Ceramic Magnets
- Reversible rotation
- Interchangeable with most popular brands

Optional Features

- Conduit box or cord
- Voltage: 12-200VDC
- IP rating up to IP67 with internal brushes
- AC rectified input
- Dual shaft - for encoders or brakes
- Special paint/ finish

GIL200 Series - 90VDC - TENV - General Purpose

Output RPM	Torque (lb-in)	HP	Catalog Number	Stock Model	Arm. Voltage DC	FL Amps DC	Ratio	Overall Length less Shaft(in.)	Motor OD (in.)	Approx Shipping Weight (lbs.)	List Price	Multiplier
6	290	1/20	GH2001	Y	90	0.59	343	8.08	3.13	9.3	$651	DC2
9	266	1/20	GH2002	Y	90	0.75	202	8.08	3.13	9.3	$651	DC2
18	150	1/8	GH2003	Y	90	0.80	103	8.08	3.13	9.3	$651	DC2
21	280	1/8	GH2004	Y	90	1.30	88	10.08	3.13	12	$656	DC2
26	280	1/8	GH2005	Y	90	1.58	69	10.08	3.13	12	$663	DC2
32	244	1/8	GH2006	Y	90	1.50	58	10.08	3.13	12	$663	DC2
34	82	1/20	GH2014	Y	90	0.94	58	8.08	3.13	9.3	$651	DC2
42	280	1/4	GH2019	Y	90	2.50	58	10.08	3.27	13	$682	DC2
51	55	1/20	GH2013	Y	90	0.94	34	8.08	3.13	9.3	$651	DC2
54	138	1/8	GH2007	Y	90	1.51	34	10.08	3.13	12	$663	DC2
61	113	1/8	GH2008	Y	90	1.42	30	10.08	3.13	12	$653	DC2
62	235	1/4	GH2018	Y	90	2.80	58	10.08	3.27	13	$682	DC2
83	160	1/4	GH2017	Y	90	2.50	30	10.08	3.27	13	$682	DC2
91	86	1/8	GH2009	Y	90	1.58	20	10.08	3.13	12	$653	DC2
111	28	1/20	GH2012	Y	90	0.97	17.5	8.08	3.13	9.3	$651	DC2
165	90	1/4	GH2016	Y	90	2.90	20	10.08	3.27	13	$682	DC2
165	47	1/8	GH2010	Y	90	1.57	11	10.08	3.13	12	$653	DC2
350	40	1/4	GH2015	Y	90	2.70	11	10.08	3.27	13	$682	DC2
358	35	1/4	GH2020	N*	90	2.30	5	10.08	3.27	13	$682	DC2
364	21	1/8	GH2011	Y	90	1.55	5	10.08	3.13	12	$667	DC2

Check Availability

GIL200 Dimensions

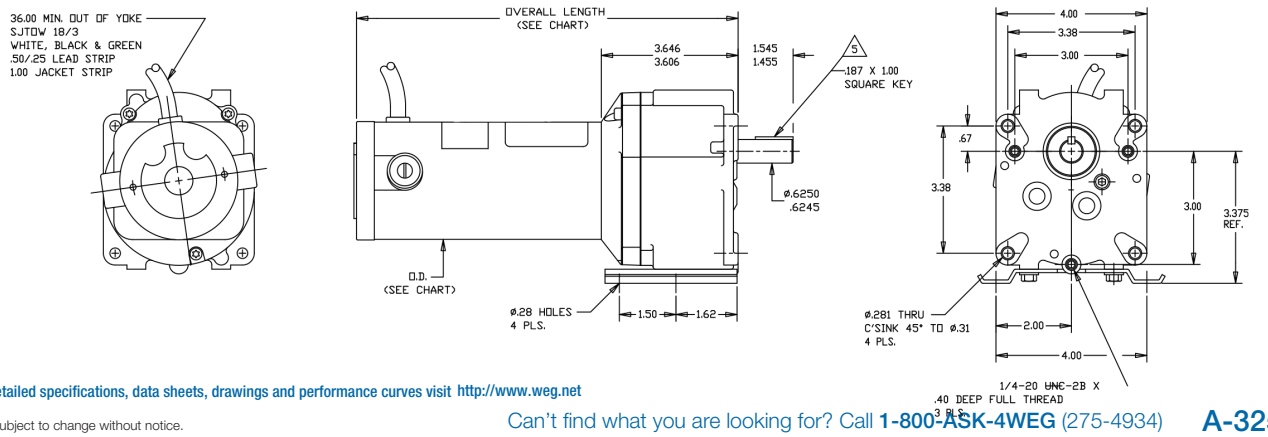

TG-90™ Speed Reducers

TG-90™ Catalog Number Sequence, Output Bores and Overhung load ratings A-326
TG-90™ Quill Type Speed Reducers A-327
TG-90™ Solid Shaft Speed Reducers A-332
Dimensions A-336

WEG's Line of right angle gear reducers has been a leading source to the industry for over 60 years. Designed for reliability and long life, the TG-90 series comes in a variety of sizes and styles. Our robust design is precision engineered and manufactured to fit a variety of applications. Ideal for use on conveyors, material handling and packaging machinery, lift gates, hoists, and many other applications, the TG-90 series proves to be a versatile choice for all your gearing needs.

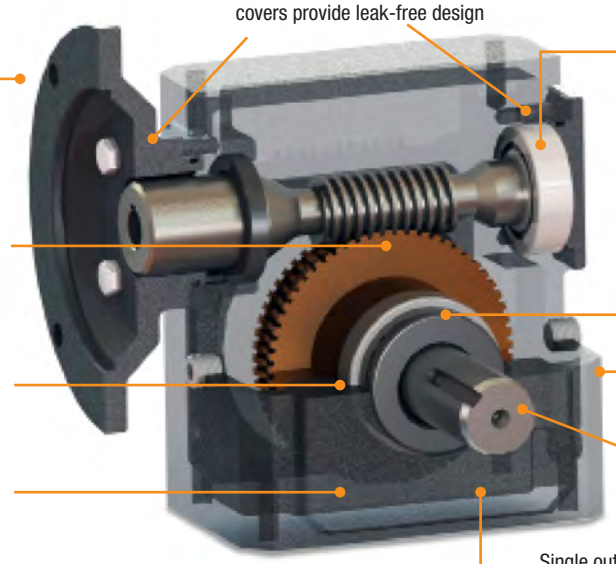

Features:

- Cast iron housing construction
- Forged manganese bronze worm gear for added strength
- Oversized high-speed input bearings to withstand high shock loads
- Oversized output tapered roller bearings to withstand high overhung and thrust loads
- Specially designed double lip seals maximize life and minimize potential for leaks
- High capacity oil reservoir filled with synthetic oil for cool operation, long life and maximize torque capacity
- Available in 56C, 143TC and 180TC quill or solid shaft input mounting
- Eight gear ratios available from 5:1 to 60:1
- Coming soon - accessory mounting kits to increase modularity for interchange to competitor's product
- WEG TG gear reducers are interchangable to many brands, including Grove Gear, Boston Gear, Hub City, Worldwide and many more.

Data subject to change without notice.

TG-90 Catalog Number Sequence

STYLE	SIZE	RATIO	OUTPUT SHAFT	MOTOR MOUNT	OUTPUT BORE CODE	Lubrication	Ventilation
TQ - Quill Input TS- Shaft Input	13 - 1.33" CD 15 - 1.54" CD 18 - 1.75" CD 21 - 2.06" CD 24 -2.37" CD 26 - 2.63" CD	5 10 15 20 30 40 50 60	L - Left Hand R - Right Hand D - Double H - Hollow	56 -56C 140 - 143/5TC 180 - 182/4TC "Blank" - shaft input	(Hollow output shaft only) Refer to table below for available bores	S - Mobile Synthetic (Std.) N - No oil O - Special	P - Pressure Relief Vent - (Std.) N - No Vent
TQ	**21**	**60**	**L**	**56**		**S**	**P**

TG-90 Available Output Bores

Fraction Size	Decimal Size	Output Bore Code	Reducer Size					
			13	15	18	21	24	26
5/8	0.625	10						
11/16	0.688	11						
3/4	0.750	12						
7/8	0.875	14						
1	1.000	16						
1-1/8	1.125	18						
1-3/16	1.188	19						
1-1/4	1.250	20						
1-7/16	1.438	23						
1-1/2	1.500	24						

TG90 OVERHUNG LOAD RATINGS

Model	Single Output Shaft Max. Over-hung Load (lb)	Dual Output Shaft Max. Over-hung Load (lb)	Hollow Output Shaft Max. Over-hung Load (lb)
T13	425	213	425
T15	655	328	655
T18	925	463	925
T21	1200	600	1200
T24	1670	835	1670
T26	1665	833	1665

C-Face Input/Solid Shaft Output

Shaft Input/Solid Shaft Output

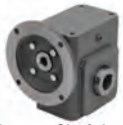

C-Face or Shaft Input/ Hollow Bore Output

Shaft Input/Hollow Shaft Output

TG-90™ Quill Type Speed Reducers

Service Class I Torque Ratings (1.0 Service Factor)
Service Class II Torque Ratings (≥ 1.4 Service Factor)
Service Class III Torque Ratings (≥ 2.0 Service Factor)

Nominal Output RPM @ 1750 RPM In	Gear Ratio	Continuous Duty Output Torque (In-Lbs) Based on 1750 RPM Motor									Max Input HP	Max Output Torque Rating In-Lbs	NEMA Motor Mount	Catalog Number	List Price	Multi. Symbol
		0.25	0.33	0.5	0.75	1	1.5	2	3	5						
350	5:1			83	124	166					1.32	218	56C	TQ135L56SP	$509	TG
				83	124	166					1.32	218	56C	TQ135R56SP	$509	
				83	124	166					1.32	218	56C	TQ135D56SP	$515	
				83	124	166					1.32	218	56C	TQ135H56SP	$538	
					124	166	250				1.89	313	140TC	TQ155L140SP	$558	
					124	166	250				1.89	313	140TC	TQ155R140SP	$558	
					124	166	250				1.89	313	140TC	TQ155D140SP	$569	
					124	166	250				1.89	313	140TC	TQ155H140SP	$593	
						167	251	335			2.50	418	140TC	TQ185L140SP	$575	
						167	251	335			2.50	418	140TC	TQ185R140SP	$575	
						167	251	335			2.50	418	140TC	TQ185D140SP	$586	
						167	251	335			2.50	418	140TC	TQ185H140SP	$643	
							251	335	502		3.65	611	140TC	TQ215L140SP	$590	
							251	335	502		3.65	611	140TC	TQ215R140SP	$590	
							251	335	502		3.65	611	140TC	TQ215D140SP	$600	
							251	335	502		3.65	611	140TC	TQ215H140SP	$669	
								335	502	837	4.89	819	140TC	TQ245L140SP	$712	
								335	502	837	4.89	819	140TC	TQ245R140SP	$712	
								335	502	837	4.89	819	140TC	TQ245D140SP	$723	
								335	502	837	4.89	819	140TC	TQ245H140SP	$805	
								335	502	837	5.36	1037	140TC	TQ265L140SP	$876	
								335	502	837	5.36	1037	140TC	TQ265R140SP	$876	
								335	502	837	5.36	1037	140TC	TQ265D140SP	$904	
								335	502	837	5.36	1037	140TC	TQ265H140SP	$990	
175	10:1		105	158	238						0.85	269	56C	TQ1310L56SP	$509	TG
			105	158	238						0.85	269	56C	TQ1310R56SP	$509	
			105	158	238						0.85	269	56C	TQ1310D56SP	$515	
			105	158	238						0.85	269	56C	TQ1310H56SP	$538	
				160	240	321					1.19	382	140TC	TQ1510L140SP	$558	
				160	240	321					1.19	382	140TC	TQ1510R140SP	$558	
				160	240	321					1.19	382	140TC	TQ1510D140SP	$569	
				160	240	321					1.19	382	140TC	TQ1510H140SP	$593	
					243	324	486				1.59	514	140TC	TQ1810L140SP	$575	
					243	324	486				1.59	514	140TC	TQ1810R140SP	$575	
					243	324	486				1.59	514	140TC	TQ1810D140SP	$586	
					243	324	486				1.59	514	140TC	TQ1810H140SP	$643	
						324	486	648			2.33	755	140TC	TQ2110L140SP	$590	
						324	486	648			2.33	755	140TC	TQ2110R140SP	$590	
						324	486	648			2.33	755	140TC	TQ2110D140SP	$600	
						324	486	648			2.33	755	140TC	TQ2110H140SP	$669	
							492	655	983		3.18	1041	140TC	TQ2410L140SP	$712	
							492	655	983		3.18	1041	140TC	TQ2410R140SP	$712	
							492	655	983		3.18	1041	140TC	TQ2410D140SP	$723	
							492	655	983		3.18	1041	140TC	TQ2410H140SP	$805	
							492	655	983		4.00	1311	140TC	TQ2610L140SP	$876	
							492	655	983		4.00	1311	140TC	TQ2610R140SP	$876	
							492	655	983		4.00	1311	140TC	TQ2610D140SP	$904	
							492	655	983		4.00	1311	140TC	TQ2610H140SP	$990	

Data subject to change without notice.

TG-90™ Quill Type Speed Reducers

Nominal Output RPM @ 1750 RPM In	Gear Ratio	Continuous Duty Output Torque (In-Lbs) Based on 1750 RPM Motor									Max Input HP	Max Output Torque Rating In-Lbs	NEMA Motor Mount	Catalog Number	List Price	Multi. Symbol
		0.25	0.33	0.5	0.75	1	1.5	2	3	5						
117	15:1	113	149	226							0.64	288	56C	TQ1315L56SP	$509	TG
		113	149	226							0.64	288	56C	TQ1315R56SP	$509	
		113	149	226							0.64	288	56C	TQ1315D56SP	$515	
		113	149	226							0.64	288	56C	TQ1315H56SP	$538	
			151	229	343						0.90	410	56C	TQ1515L56SP	$558	
			151	229	343						0.90	410	56C	TQ1515R56SP	$558	
			151	229	343						0.90	410	56C	TQ1515D56SP	$569	
			151	229	343						0.90	410	56C	TQ1515H56SP	$593	
				234	351	469					1.17	548	56C	TQ1815L56SP	$575	
				234	351	469					1.17	548	56C	TQ1815R56SP	$575	
				234	351	469					1.17	548	56C	TQ1815D56SP	$586	
				234	351	469					1.17	548	56C	TQ1815H56SP	$643	
					351	469	703				1.73	813	56C	TQ2115L56SP	$590	
					351	469	703				1.73	813	56C	TQ2115R56SP	$590	
					351	469	703				1.73	813	56C	TQ2115D56SP	$600	
					351	469	703				1.73	813	56C	TQ2115H56SP	$669	
						474	711	948			2.37	1123	56C	TQ2415L56SP	$712	
						474	711	948			2.37	1123	56C	TQ2415R56SP	$712	
						474	711	948			2.37	1123	56C	TQ2415D56SP	$723	
						474	711	948			2.37	1123	56C	TQ2415H56SP	$805	
							711	948	1422		2.99	1419	56C	TQ2615L56SP	$876	
							711	948	1422		2.99	1419	56C	TQ2615R56SP	$876	
							711	948	1422		2.99	1419	56C	TQ2615D56SP	$904	
							711	948	1422		2.99	1419	56C	TQ2615H56SP	$990	
88	20:1	145	191	290							0.51	295	56C	TQ1320L56SP	$509	TG
		145	191	290							0.51	295	56C	TQ1320R56SP	$509	
		145	191	290							0.51	295	56C	TQ1320D56SP	$515	
		145	191	290							0.51	295	56C	TQ1320H56SP	$538	
		145	191	290							0.72	420	56C	TQ1520L56SP	$558	
		145	191	290							0.72	420	56C	TQ1520R56SP	$558	
		145	191	290							0.72	420	56C	TQ1520D56SP	$569	
		145	191	290							0.72	420	56C	TQ1520H56SP	$593	
			199	301	451						0.94	566	56C	TQ1820L56SP	$575	
			199	301	451						0.94	566	56C	TQ1820R56SP	$575	
			199	301	451						0.94	566	56C	TQ1820D56SP	$586	
			199	301	451						0.94	566	56C	TQ1820H56SP	$643	
				301	451	602					1.39	835	56C	TQ2120L56SP	$590	
				301	451	602					1.39	835	56C	TQ2120R56SP	$590	
				301	451	602					1.39	835	56C	TQ2120D56SP	$600	
				301	451	602					1.39	835	56C	TQ2120H56SP	$669	
					457	609	913				1.89	1152	56C	TQ2420L56SP	$712	
					457	609	913				1.89	1152	56C	TQ2420R56SP	$712	
					457	609	913				1.89	1152	56C	TQ2420D56SP	$723	
					457	609	913				1.89	1152	56C	TQ2420H56SP	$805	
						609	913	1218			2.40	1461	56C	TQ2620L56SP	$876	
						609	913	1218			2.40	1461	56C	TQ2620R56SP	$876	
						609	913	1218			2.40	1461	56C	TQ2620D56SP	$904	
						609	913	1218			2.40	1461	56C	TQ2620H56SP	$990	

TG-90™ Quill Type Speed Reducers

Service Class I Torque Ratings (1.0 Service Factor)
Service Class II Torque Ratings (≥ 1.4 Service Factor)
Service Class III Torque Ratings (≥ 2.0 Service Factor)

Nominal Output RPM @ 1750 RPM In	Gear Ratio	Continuous Duty Output Torque (In-Lbs) Based on 1750 RPM Motor									Max Input HP	Max Output Torque Rating In-Lbs	NEMA Motor Mount	Catalog Number	List Price	Multi. Symbol
		0.25	0.33	0.5	0.75	1	1.5	2	3	5						
58	30:1	201	265								0.37	297	56C	TQ1330L56SP	$509	TG
		201	265								0.37	297	56C	TQ1330R56SP	$509	
		201	265								0.37	297	56C	TQ1330D56SP	$515	
		201	265								0.37	297	56C	TQ1330H56SP	$538	
		201	265	402							0.53	423	56C	TQ1530L56SP	$558	
		201	265	402							0.53	423	56C	TQ1530R56SP	$558	
		201	265	402							0.53	423	56C	TQ1530D56SP	$569	
		201	265	402							0.53	423	56C	TQ1530H56SP	$593	
		212	280	424							0.67	571	56C	TQ1830L56SP	$575	
		212	280	424							0.67	571	56C	TQ1830R56SP	$575	
		212	280	424							0.67	571	56C	TQ1830D56SP	$586	
		212	280	424							0.67	571	56C	TQ1830H56SP	$643	
				424	636	848					0.99	842	56C	TQ2130L56SP	$590	
				424	636	848					0.99	842	56C	TQ2130R56SP	$590	
				424	636	848					0.99	842	56C	TQ2130D56SP	$600	
				424	636	848					0.99	842	56C	TQ2130H56SP	$669	
				429	644	858					1.36	1165	56C	TQ2430L56SP	$712	
				429	644	858					1.36	1165	56C	TQ2430R56SP	$712	
				429	644	858					1.36	1165	56C	TQ2430D56SP	$723	
				429	644	858					1.36	1165	56C	TQ2430H56SP	$805	
					644	858	1288				1.72	1474	56C	TQ2630L56SP	$876	
					644	858	1288				1.72	1474	56C	TQ2630R56SP	$876	
					644	858	1288				1.72	1474	56C	TQ2630D56SP	$904	
					644	858	1288				1.72	1474	56C	TQ2630H56SP	$990	
44	40:1	247									0.30	292	56C	TQ1340L56SP	$509	TG
		247									0.30	292	56C	TQ1340R56SP	$509	
		247									0.30	292	56C	TQ1340D56SP	$515	
		247									0.30	292	56C	TQ1340H56SP	$538	
		247	326								0.42	419	56C	TQ1540L56SP	$558	
		247	326								0.42	419	56C	TQ1540R56SP	$558	
		247	326								0.42	419	56C	TQ1540D56SP	$569	
		247	326								0.42	419	56C	TQ1540H56SP	$593	
		261	345	523							0.54	565	56C	TQ1840L56SP	$575	
		261	345	523							0.54	565	56C	TQ1840R56SP	$575	
		261	345	523							0.54	565	56C	TQ1840D56SP	$586	
		261	345	523							0.54	565	56C	TQ1840H56SP	$643	
			345	523	784						0.80	833	56C	TQ2140L56SP	$590	
			345	523	784						0.80	833	56C	TQ2140R56SP	$590	
			345	523	784						0.80	833	56C	TQ2140D56SP	$600	
			345	523	784						0.80	833	56C	TQ2140H56SP	$669	
				530	795	1060					1.09	1154	56C	TQ2440L56SP	$712	
				530	795	1060					1.09	1154	56C	TQ2440R56SP	$712	
				530	795	1060					1.09	1154	56C	TQ2440D56SP	$723	
				530	795	1060					1.09	1154	56C	TQ2440H56SP	$805	
					795	1060	1590				1.38	1460	56C	TQ2640L56SP	$876	
					795	1060	1590				1.38	1460	56C	TQ2640R56SP	$876	
					795	1060	1590				1.38	1460	56C	TQ2640D56SP	$904	
					795	1060	1590				1.38	1460	56C	TQ2640H56SP	$990	

Data subject to change without notice.

TG-90™ Quill Type Speed Reducers

Nominal Output RPM @ 1750 RPM In	Gear Ratio	Continuous Duty Output Torque (In-Lbs) Based on 1750 RPM Motor									Max Input HP	Max Output Torque Rating In-Lbs	NEMA Motor Mount	Catalog Number	List Price	Multi. Symbol
		0.25	0.33	0.5	0.75	1	1.5	2	3	5						
35	50:1	288									0.24	281	56C	TQ1350L56SP	$509	TG
		288									0.24	281	56C	TQ1350R56SP	$509	
		288									0.24	281	56C	TQ1350D56SP	$515	
		288									0.24	281	56C	TQ1350H56SP	$538	
		288	380								0.35	403	56C	TQ1550L56SP	$558	
		288	380								0.35	403	56C	TQ1550R56SP	$558	
		288	380								0.35	403	56C	TQ1550D56SP	$569	
		288	380								0.35	403	56C	TQ1550H56SP	$593	
		306	404								0.44	544	56C	TQ1850L56SP	$575	
		306	404								0.44	544	56C	TQ1850R56SP	$575	
		306	404								0.44	544	56C	TQ1850D56SP	$586	
		306	404								0.44	544	56C	TQ1850H56SP	$643	
			410	621	932						0.65	803	56C	TQ2150L56SP	$590	
			410	621	932						0.65	803	56C	TQ2150R56SP	$590	
			410	621	932						0.65	803	56C	TQ2150D56SP	$600	
			410	621	932						0.65	803	56C	TQ2150H56SP	$669	
			416	630	945						0.88	1114	56C	TQ2450L56SP	$712	
			416	630	945						0.88	1114	56C	TQ2450R56SP	$712	
			416	630	945						0.88	1114	56C	TQ2450D56SP	$723	
			416	630	945						0.88	1114	56C	TQ2450H56SP	$805	
				630	945	1261					1.12	1410	56C	TQ2650L56SP	$876	
				630	945	1261					1.12	1410	56C	TQ2650R56SP	$876	
				630	945	1261					1.12	1410	56C	TQ2650D56SP	$904	
				630	945	1261					1.12	1410	56C	TQ2650H56SP	$990	
29	60:1										0.20	267	56C	TQ1360L56SP	$457	TG
											0.20	267	56C	TQ1360R56SP	$457	
											0.20	267	56C	TQ1360D56SP	$470	
											0.20	267	56C	TQ1360H56SP	$507	
		326									0.29	383	56C	TQ1560L56SP	$533	
		326									0.29	383	56C	TQ1560R56SP	$533	
		326									0.29	383	56C	TQ1560D56SP	$559	
		326									0.29	383	56C	TQ1560H56SP	$573	
		348	459								0.37	517	56C	TQ1860L56SP	$551	
		348	459								0.37	517	56C	TQ1860R56SP	$551	
		348	459								0.37	517	56C	TQ1860D56SP	$580	
		348	459								0.37	517	56C	TQ1860H56SP	$619	
		353	466	706							0.54	762	56C	TQ2160L56SP	$585	
		353	466	706							0.54	762	56C	TQ2160R56SP	$585	
		353	466	706							0.54	762	56C	TQ2160D56SP	$632	
		353	466	706							0.54	762	56C	TQ2160H56SP	$672	
			473	717	1076						0.74	1057	56C	TQ2460L56SP	$701	
			473	717	1076						0.74	1057	56C	TQ2460R56SP	$701	
			473	717	1076						0.74	1057	56C	TQ2460D56SP	$748	
			473	717	1076						0.74	1057	56C	TQ2460H56SP	$816	
				717	1076	1434					0.93	1338	56C	TQ2660L56SP	$868	
				717	1076	1434					0.93	1338	56C	TQ2660R56SP	$868	
				717	1076	1434					0.93	1338	56C	TQ2660D56SP	$918	
				717	1076	1434					0.93	1338	56C	TQ2660H56SP	$983	

TG-90™ Solid Shaft Speed Reducers

Service Class I Torque Ratings (1.0 Service Factor)
Service Class II Torque Ratings (≥ 1.4 Service Factor)
Service Class III Torque Ratings (≥ 2.0 Service Factor)

Nominal Output RPM @ 1750 RPM In	Gear Ratio	Continuous Duty Output Torque (In-Lbs) Based on Motor HP at 1750 RPM									Max Input HP	Max Output Torque Rating In-Lbs	Catalog Number	List Price	Multi. Symbol
		0.25	0.33	0.5	0.75	1	1.5	2	3	5					
350	5:1			83	124	166					1.32	218	TS135LSP	$457	TG
				83	124	166					1.32	218	TS135RSP	$457	
				83	124	166					1.32	218	TS135DSP	$470	
				83	124	166					1.32	218	TS135HSP	$507	
					124	166	250				1.89	313	TS155LSP	$533	
					124	166	250				1.89	313	TS155RSP	$533	
					124	166	250				1.89	313	TS155DSP	$559	
					124	166	250				1.89	313	TS155HSP	$573	
						167	251	335			2.50	418	TS185LSP	$551	
						167	251	335			2.50	418	TS185RSP	$551	
						167	251	335			2.50	418	TS185DSP	$580	
						167	251	335			2.50	418	TS185HSP	$619	
							251	335	502		3.65	611	TS215LSP	$585	
							251	335	502		3.65	611	TS215RSP	$585	
							251	335	502		3.65	611	TS215DSP	$632	
							251	335	502		3.65	611	TS215HSP	$672	
								335	502	837	4.89	819	TS245LSP	$701	
								335	502	837	4.89	819	TS245RSP	$701	
								335	502	837	4.89	819	TS245DSP	$748	
								335	502	837	4.89	819	TS245HSP	$816	
								335	502	837	5.36	1037	TS265LSP	$868	
								335	502	837	5.36	1037	TS265RSP	$868	
								335	502	837	5.36	1037	TS265DSP	$918	
								335	502	837	5.36	1037	TS265HSP	$983	
175	10:1		105	158	238						0.85	269	TS1310LSP	$457	TG
			105	158	238						0.85	269	TS1310RSP	$457	
			105	158	238						0.85	269	TS1310DSP	$470	
			105	158	238						0.85	269	TS1310HSP	$507	
				160	240	321					1.19	382	TS1510LSP	$533	
				160	240	321					1.19	382	TS1510RSP	$533	
				160	240	321					1.19	382	TS1510DSP	$559	
				160	240	321					1.19	382	TS1510HSP	$573	
					243	324	486				1.59	514	TS1810LSP	$551	
					243	324	486				1.59	514	TS1810RSP	$551	
					243	324	486				1.59	514	TS1810DSP	$580	
					243	324	486				1.59	514	TS1810HSP	$619	
						324	486	648			2.33	755	TS2110LSP	$585	
						324	486	648			2.33	755	TS2110RSP	$585	
						324	486	648			2.33	755	TS2110DSP	$632	
						324	486	648			2.33	755	TS2110HSP	$672	
							492	655	983		3.18	1041	TS2410LSP	$701	
							492	655	983		3.18	1041	TS2410RSP	$701	
							492	655	983		3.18	1041	TS2410DSP	$748	
							492	655	983		3.18	1041	TS2410HSP	$816	
							492	655	983		4.00	1311	TS2610LSP	$868	
							492	655	983		4.00	1311	TS2610RSP	$868	
							492	655	983		4.00	1311	TS2610DSP	$918	
							492	655	983		4.00	1311	TS2610HSP	$983	

Data subject to change without notice.

TG-90™ Solid Shaft Speed Reducers

Nominal Output RPM @ 1750 RPM In	Gear Ratio	Continuous Duty Output Torque (In-Lbs) Based on Motor HP at 1750 RPM									Max Input HP	Max Output Torque Rating In-Lbs	Catalog Number	List Price	Multi. Symbol
		0.25	0.33	0.5	0.75	1	1.5	2	3	5					
117	15:1	113	149	226							0.64	288	TS1315LSP	$457	TG
		113	149	226							0.64	288	TS1315RSP	$457	
		113	149	226							0.64	288	TS1315DSP	$470	
		113	149	226							0.64	288	TS1315HSP	$507	
			151	229	343						0.90	410	TS1515LSP	$533	
			151	229	343						0.90	410	TS1515RSP	$533	
			151	229	343						0.90	410	TS1515DSP	$559	
			151	229	343						0.90	410	TS1515HSP	$573	
				234	351	469					1.17	548	TS1815LSP	$551	
				234	351	469					1.17	548	TS1815RSP	$551	
				234	351	469					1.17	548	TS1815DSP	$580	
				234	351	469					1.17	548	TS1815HSP	$619	
					351	469	703				1.73	813	TS2115LSP	$585	
					351	469	703				1.73	813	TS2115RSP	$585	
					351	469	703				1.73	813	TS2115DSP	$632	
					351	469	703				1.73	813	TS2115HSP	$672	
						474	711	948			2.37	1123	TS2415LSP	$701	
						474	711	948			2.37	1123	TS2415RSP	$701	
						474	711	948			2.37	1123	TS2415DSP	$748	
						474	711	948			2.37	1123	TS2415HSP	$816	
							711	948	1422		2.99	1419	TS2615LSP	$868	
							711	948	1422		2.99	1419	TS2615RSP	$868	
							711	948	1422		2.99	1419	TS2615DSP	$918	
							711	948	1422		2.99	1419	TS2615HSP	$983	
88	20:1	145	191	290							0.51	295	TS1320LSP	$457	TG
		145	191	290							0.51	295	TS1320RSP	$457	
		145	191	290							0.51	295	TS1320DSP	$470	
		145	191	290							0.51	295	TS1320HSP	$507	
		145	191	290							0.72	420	TS1520LSP	$533	
		145	191	290							0.72	420	TS1520RSP	$533	
		145	191	290							0.72	420	TS1520DSP	$559	
		145	191	290							0.72	420	TS1520HSP	$573	
			199	301	451						0.94	566	TS1820LSP	$551	
			199	301	451						0.94	566	TS1820RSP	$551	
			199	301	451						0.94	566	TS1820DSP	$580	
			199	301	451						0.94	566	TS1820HSP	$619	
				301	451	602					1.39	835	TS2120LSP	$585	
				301	451	602					1.39	835	TS2120RSP	$585	
				301	451	602					1.39	835	TS2120DSP	$632	
				301	451	602					1.39	835	TS2120HSP	$672	
					457	609	913				1.89	1152	TS2420LSP	$701	
					457	609	913				1.89	1152	TS2420RSP	$701	
					457	609	913				1.89	1152	TS2420DSP	$748	
					457	609	913				1.89	1152	TS2420HSP	$816	
						609	913	1218			2.40	1461	TS2620LSP	$868	
						609	913	1218			2.40	1461	TS2620RSP	$868	
						609	913	1218			2.40	1461	TS2620DSP	$918	
						609	913	1218			2.40	1461	TS2620HSP	$983	

TG-90™ Solid Shaft Speed Reducers

Service Class I Torque Ratings (1.0 Service Factor)
Service Class II Torque Ratings (≥ 1.4 Service Factor)
Service Class III Torque Ratings (≥ 2.0 Service Factor)

Nominal Output RPM @ 1750 RPM In	Gear Ratio	Continuous Duty Output Torque (In-Lbs) Based on Motor HP at 1750 RPM									Max Input HP	Max Output Torque Rating In-Lbs	Catalog Number	List Price	Multi. Symbol
		0.25	0.33	0.5	0.75	1	1.5	2	3	5					
58	30:1	201	265								0.37	297	TS1330LSP	$457	TG
		201	265								0.37	297	TS1330RSP	$457	
		201	265								0.37	297	TS1330DSP	$470	
		201	265								0.37	297	TS1330HSP	$507	
		201	265	402							0.53	423	TS1530LSP	$533	
		201	265	402							0.53	423	TS1530RSP	$533	
		201	265	402							0.53	423	TS1530DSP	$559	
		201	265	402							0.53	423	TS1530HSP	$573	
		212	280	424							0.67	571	TS1830LSP	$551	
		212	280	424							0.67	571	TS1830RSP	$551	
		212	280	424							0.67	571	TS1830DSP	$580	
		212	280	424							0.67	571	TS1830HSP	$619	
				424	636	848					0.99	842	TS2130LSP	$585	
				424	636	848					0.99	842	TS2130RSP	$585	
				424	636	848					0.99	842	TS2130DSP	$632	
				424	636	848					0.99	842	TS2130HSP	$672	
				429	644	858					1.36	1165	TS2430LSP	$701	
				429	644	858					1.36	1165	TS2430RSP	$701	
				429	644	858					1.36	1165	TS2430DSP	$748	
				429	644	858					1.36	1165	TS2430HSP	$816	
					644	858	1288				1.72	1474	TS2630LSP	$868	
					644	858	1288				1.72	1474	TS2630RSP	$868	
					644	858	1288				1.72	1474	TS2630DSP	$918	
					644	858	1288				1.72	1474	TS2630HSP	$983	
44	40:1	247									0.30	292	TS1340LSP	$457	TG
		247									0.30	292	TS1340RSP	$457	
		247									0.30	292	TS1340DSP	$470	
		247									0.30	292	TS1340HSP	$507	
		247	326								0.42	419	TS1540LSP	$533	
		247	326								0.42	419	TS1540RSP	$533	
		247	326								0.42	419	TS1540DSP	$559	
		247	326								0.42	419	TS1540HSP	$573	
		261	345	523							0.54	565	TS1840LSP	$551	
		261	345	523							0.54	565	TS1840RSP	$551	
		261	345	523							0.54	565	TS1840DSP	$580	
		261	345	523							0.54	565	TS1840HSP	$619	
			345	523	784						0.80	833	TS2140LSP	$585	
			345	523	784						0.80	833	TS2140RSP	$585	
			345	523	784						0.80	833	TS2140DSP	$632	
			345	523	784						0.80	833	TS2140HSP	$672	
				530	795	1060					1.09	1154	TS2440LSP	$701	
				530	795	1060					1.09	1154	TS2440RSP	$701	
				530	795	1060					1.09	1154	TS2440DSP	$748	
				530	795	1060					1.09	1154	TS2440HSP	$816	
					795	1060	1590				1.38	1460	TS2640LSP	$868	
					795	1060	1590				1.38	1460	TS2640RSP	$868	
					795	1060	1590				1.38	1460	TS2640DSP	$918	
					795	1060	1590				1.38	1460	TS2640HSP	$983	

Data subject to change without notice.

TG-90™ Solid Shaft Speed Reducers

Nominal Output RPM @ 1750 RPM In	Gear Ratio	Continuous Duty Output Torque (In-Lbs) Based on Motor HP at 1750 RPM									Max Input HP	Max Output Torque Rating In-Lbs	Catalog Number	List Price	Multi. Symbol
		0.25	0.33	0.5	0.75	1	1.5	2	3	5					
35	50:1	288									0.24	281	TS1350LSP	$457	TG
		288									0.24	281	TS1350RSP	$457	
		288									0.24	281	TS1350DSP	$470	
		288									0.24	281	TS1350HSP	$507	
		288	380								0.35	403	TS1550LSP	$533	
		288	380								0.35	403	TS1550RSP	$533	
		288	380								0.35	403	TS1550DSP	$559	
		288	380								0.35	403	TS1550HSP	$573	
		306	404								0.44	544	TS1850LSP	$551	
		306	404								0.44	544	TS1850RSP	$551	
		306	404								0.44	544	TS1850DSP	$580	
		306	404								0.44	544	TS1850HSP	$619	
			410	621	932						0.65	803	TS2150LSP	$585	
			410	621	932						0.65	803	TS2150RSP	$585	
			410	621	932						0.65	803	TS2150DSP	$632	
			410	621	932						0.65	803	TS2150HSP	$672	
			416	630	945						0.88	1114	TS2450LSP	$701	
			416	630	945						0.88	1114	TS2450RSP	$701	
			416	630	945						0.88	1114	TS2450DSP	$748	
			416	630	945						0.88	1114	TS2450HSP	$816	
				630	945	1261					1.12	1410	TS2650LSP	$868	
				630	945	1261					1.12	1410	TS2650RSP	$868	
				630	945	1261					1.12	1410	TS2650DSP	$918	
				630	945	1261					1.12	1410	TS2650HSP	$983	
29	60:1										0.20	267	TS1360LSP	$457	TG
											0.20	267	TS1360RSP	$457	
											0.20	267	TS1360DSP	$470	
											0.20	267	TS1360HSP	$507	
		326									0.29	383	TS1560LSP	$533	
		326									0.29	383	TS1560RSP	$533	
		326									0.29	383	TS1560DSP	$559	
		326									0.29	383	TS1560HSP	$573	
		348	459								0.37	517	TS1860LSP	$551	
		348	459								0.37	517	TS1860RSP	$551	
		348	459								0.37	517	TS1860DSP	$580	
		348	459								0.37	517	TS1860HSP	$619	
		353	466	706							0.54	762	TS2160LSP	$585	
		353	466	706							0.54	762	TS2160RSP	$585	
		353	466	706							0.54	762	TS2160DSP	$632	
		353	466	706							0.54	762	TS2160HSP	$672	
			473	717	1076						0.74	1057	TS2460LSP	$701	
			473	717	1076						0.74	1057	TS2460RSP	$701	
			473	717	1076						0.74	1057	TS2460DSP	$748	
			473	717	1076						0.74	1057	TS2460HSP	$816	
				717	1076	1434					0.93	1338	TS2660LSP	$868	
				717	1076	1434					0.93	1338	TS2660RSP	$868	
				717	1076	1434					0.93	1338	TS2660DSP	$918	
				717	1076	1434					0.93	1338	TS2660HSP	$983	

TG90 Style TQ - Motorized Input / Solid Output Shaft

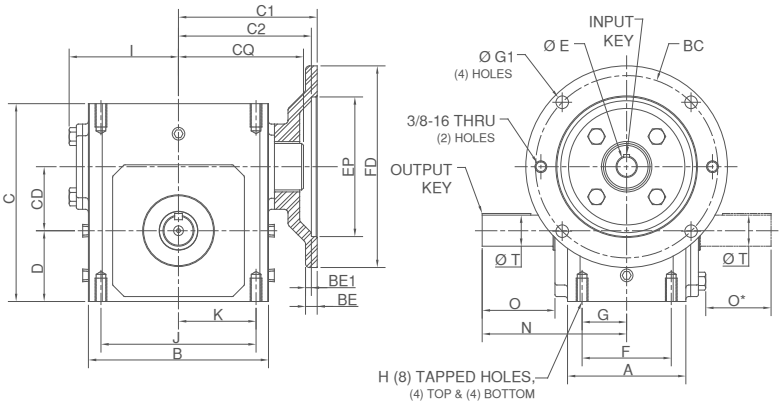

TG90 Style TS - Shaft Input / Solid Output Shaft

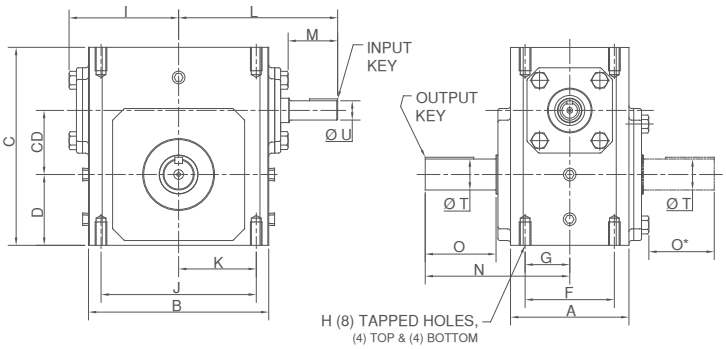

STYLE TQ / TS DIMENSIONS (Inches)

SIZE	A	B	C	CD	D	F	G	H	I	J	K	L	M	N	O	O*	T DIA +0.000 -0.002	U DIA +0.000 -0.001	Input Key	Output Key
T13	2.88	3.82	4.66	1.33	1.72	2.000	1.000	5/16-18 X .44 DEEP	2.68	3.250	1.625	3.82	1.28	4.00	2.16	1.94	0.625	0.500	1/8 SQ. x .88 LG.	3/16 SQ.X 1.38 LG.
T15	3.44	4.88	5.38	1.54	1.91	2.750	1.375	5/16-18 X .62 DEEP	3.12	4.188	2.094	4.77	1.72	4.31	2.00	1.79	0.750	0.625	3/16 SQ. x .88 LG.	3/16 SQ.X 1.38 LG.
T18	3.56	5.06	5.75	1.75	2.06	2.750	1.375	5/16-18 X .62 DEEP	3.16	4.188	2.094	4.88	1.56	4.34	2.06	1.85	0.875	0.625	3/16 SQ. x .88 LG.	3/16SQ.X 1.38 LG.
T21	3.81	5.81	6.38	2.06	2.28	2.875	1.438	3/8-16 X .75 DEEP	3.53	5.000	2.500	5.12	1.56	4.66	2.28	2.07	1.000	0.625	3/16 SQ. x .88 LG.	1/4 SQ.X 1.75 LG.
T24	4.06	6.13	6.94	2.38	2.50	2.875	1.438	3/8-16 X .75 DEEP	3.69	5.000	2.500	5.88	2.19	5.12	2.53	2.31	1.125	0.750	3/16 SQ. x 1.50 LG.	1/4 SQ.X 1.75 LG.
T26	4.44	7.38	8.00	2.63	2.94	3.375	1.688	3/8-16 X .75 DEEP	4.24	6.375	3.188	6.05	1.81	5.63	2.94	2.73	1.250	0.750	3/16 SQ. x 1.50 LG.	1/4 SQ.X 1.75 LG.

MOTOR MOUNTING DIMENSIONS (Inches)

SIZE	C1 56C/140TC	C2 180TC	CQ	
			56C/140TC	180TC
T13	3.44	N/A	3.12	N/A
T15	4.00	N/A	3.38	N/A
T18	4.09	N/A	3.59	N/A
T21	4.47	N/A	4.06	N/A
T24	4.62	5.07	4.12	4.10
T26	5.19	5.63	4.82	4.83

NEMA DIMENSIONS (Inches)

Motor Frame	BC	EP	FD	BE	BE1	E BORE DIA	Input Keyway	G1
56C	5.88	4.50	6.50	0.38	N/A	0.625	3/16 x 3/32	0.41
140TC	5.88	4.50	6.50	0.38	N/A	0.875	3/16 X 3/32	0.41
180TC	7.25	8.50	9.00	N/A	0.50	1.125	1/4 x 1/8	0.53

Data subject to change without notice.

TG90 Style TZ - Motorized Input / Hollow Output Shaft

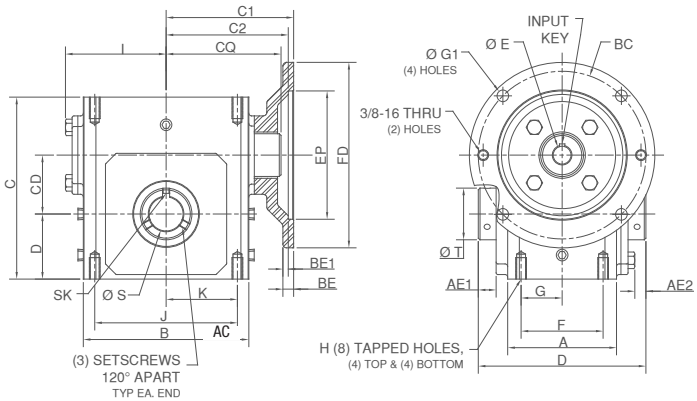

TG90 Style TS - Shaft Input / Hollow Output Shaft

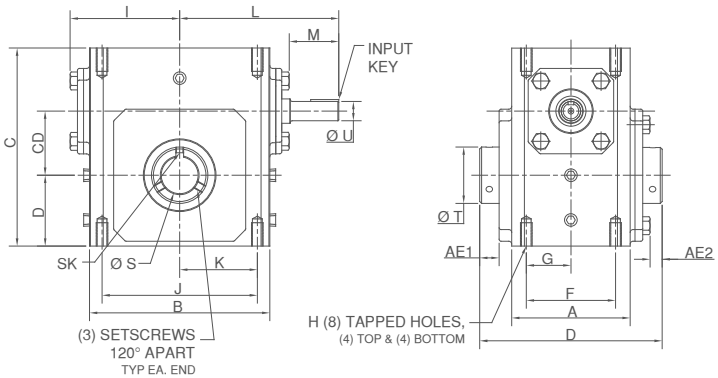

STYLE TQ / TS DIMENSIONS (Inches)

SIZE	A	AC	AE1	AE2	B	C	CD	D	F	G	H	I	J	K	L	M	N	S BORE MAX -0.000 +0.002	U DIA +0.000 -0.001	Input Key	Output Key (Max Bore)
T13	2.88	6.05	0.53	0.32	3.82	4.66	1.33	1.72	2.000	1.000	5/16-18 X .44 DEEP	2.68	3.250	1.625	3.82	1.28	4.00	0.625	0.500	1/8 SQ. x .88 LG.	3/16 SQ.X 1.50 LG.
T15	3.44	6.64	0.53	0.32	4.88	5.38	1.54	1.91	2.750	1.375	5/16-18 X .62 DEEP	3.12	4.188	2.094	4.77	1.72	4.31	0.625	0.625	3/16 SQ. x .88 LG.	3/16 SQ.X 1.50 LG.
T18	3.56	6.75	0.49	0.28	5.06	5.75	1.75	2.06	2.750	1.375	5/16-18 X .62 DEEP	3.16	4.188	2.094	4.88	1.56	4.34	1.000	0.625	3/16 SQ. x .88 LG.	1/4SQ.X 3.00 LG.
T21	3.81	7.20	0.61	0.40	5.81	6.38	2.06	2.28	2.875	1.438	3/8-16 X .75 DEEP	3.53	5.000	2.500	5.12	1.56	4.66	1.250	0.625	3/16 SQ. x .88 LG.	3/8 SQ.X 3.00 LG.
T24	4.06	8.81	0.51	0.30	6.13	6.94	2.38	2.50	2.875	1.438	3/8-16 X .75 DEEP	3.69	5.000	2.500	5.88	2.19	5.12	1.500	0.750	3/16 SQ. x 1.50 LG.	3/8 SQ.X 3.00 LG.
T26	4.44	8.49	0.6	0.39	7.38	8.00	2.63	2.94	3.375	1.688	3/8-16 X .75 DEEP	4.24	6.375	3.188	6.05	1.81	5.63	1.500	0.750	3/16 SQ. x 1.50 LG.	3/8 SQ.X 3.00 LG.

MOTOR MOUNTING DIMENSIONS (Inches)

SIZE	C1 56C/140TC	C2 180TC	CQ	
			56C/140TC	180TC
T13	3.44	N/A	3.12	N/A
T15	4.00	N/A	3.38	N/A
T18	4.09	N/A	3.59	N/A
T21	4.47	N/A	4.06	N/A
T24	4.62	5.07	4.12	4.10
T26	5.19	5.63	4.82	4.83

NEMA DIMENSIONS (Inches)

Motor Frame	BC	EP	FD	BE	BE1	E BORE DIA	Input Keyway	G1
56C	5.88	4.50	6.50	0.38	N/A	0.625	3/16 x 3/32	0.41
140TC	5.88	4.50	6.50	0.38	N/A	0.875	3/16 X 3/32	0.41
180TC	7.25	8.50	9.00	N/A	0.50	1.125	1/4 x 1/8	0.53

(for complete line of products see WEG's Automation Catalogs)

CFW320 Variable Frequency Drive. A-341
CFW500 IP20 Variable Frequency Drive. A-347
CFW500 – Washdown Duty VFD. A-349
CFW900 – System Drive A-360
EDP11 – Enclosed VFD Panel A-373
GPH2 – Combination Soft Starter A-385
ESW Non-Combination Across the Line Starters – 3 Phase – Enclosure Type 1 . . . . . A-395
ESWS Non-Combination Across the Line Starters – Non-reversing – Single-Phase – Enclosure Type 1 . . . . . A-396
PESW Non-Combination Across the Line Starters – Enclosure Type 4X – Three Phase. A-402
PESW Non-Combination Across the Line Starters – Enclosure Type 4X – Single Phase A-404
ESWC Combination Type-C Across the Line Starter A-406
ESWE Combination Type-E Across the Line Starter Enclosure Type 4X – without CPT A-409
ESWE Combination Type-E Across the Line Starter Enclosure Type 4X – with CPT A-409
ESWX Overview A-412
ESWX-M25 Series Explosion Proof Manual Motor Starters. A-413
ESWX-M65 Series Explosion Proof Manual Motor Starters. A-413
ESWX-M100 Series Explosion Proof Manual Motor Starters. A-414
ESWX NEMA 7/9 Series Explosion Proof Manual Motor Starters. A-415
Custom Control Panels Data Worksheet and Request for Quote A-419

Medium Voltage Starters

SSW7000C A-420

Data subject to change without notice.

CFW320 Series – Variable Frequency Drives

The CFW320 is a high-performance variable-speed drive for three-phase induction motors. It is ideal for machines or equipment applications requiring precise control with easy setup and operation.

The CFW320 features a compact size with contactor-style electrical connections (top in/bottom out (I/O)). The VFD's performance can be scaled to match the application by selecting Voltage Vector WEG (VVW) control or scalar control (V/f). The CFW320 includes a built-in operator interface (HMI) and SoftPLC with free WPS programming software for custom-tailored control schemes. A variety of plug-in option modules for additional I/O and communications protocols may be added to provide extended capabilities, making the CFW320 a flexible and cost-effective solution for your variable speed requirements.

Standard Features

- Listed under new UL61800-5-1
- Power Range:
  - Up to 2 HP at 3/230 VAC with 1/110-127 VAC input
  - Up to 3 HP at 3/230 VAC with 1/200-240 VAC input
  - Up to 5 HP at 3/230 VAC with 3/200-240 VAC input
  - Up to 10 HP at 3/460 VAC with 3/380-480 VAC input
- DIN rail or surface mounting with screws
- Control mode: Scalar (V/Hz) or Voltage Vector WEG (VVW)
- Switching frequency: 2.5 to 15 kHz
- Overload capacity: 150% for 60 seconds every 10 minutes or 200% for 3 seconds every 10 minutes
- Degree of protection: IP20
- 460 VAC Models available with and without dynamic braking chopper
- Conformal coated circuit board as per Class 3C2 in compliance with IEC 60721-3-3
- Built-in SoftPLC (PLC functionality)
- Built-in four digital inputs, one analog input, and one Form-C relay output
- Two independent slots: one for communication and another to expand drive I/O capability
- Wide variety of communication options

Applications

- Centrifugal pumps
- Fans / blowers
- Blenders / mixers
- Centrifuges
- Compressors
- Conveyors
- Roller tables
- Granulators
- Commercial dryers
- Rotary filters

CFW320 Catalog Number Sequence

CFW320	A	02P6	S	2	NB	20

Frame Size
A, B, C

O/P Current
01P6 = 1.6 Amps
02P6 = 2.6 Amps
04P2 = 4.2 Amps
05P6 = 5.6 Amps
06P0 = 6.0 Amps
07P3 = 7.3 Amps
08P3 = 8.3 Amps
10P0 = 10.0 Amps
11P0 = 11.0 Amps
14P0 = 14.0 Amps
15P2 = 15.2 Amps

Supply Phases
S = Single-phase
B = Single-phase or Three-phase
T = Three-phase

Supply Voltage
1 = 110-127 VAC
2 = 200-240 VAC
4 = 380-480 VAC

Options
NB = No Internal DB
DB = With Internal DB
20 = IP20 Encl. (standard)

Chart intended as reference only and not to create part numbers.

CFW320 – IP20

Motor Voltage	Motor HP [1]	Drive Amps [2]	Catalog Number	Braking Transistor	Frame Size	Dimensions (in) H x W x D	Approx. Weight (lbs)	List Price	Multiplier
230 VAC / Three-Phase [4]	**Input Power Supply: Single-Phase 110-127 VAC**								
	1/4 or 1/3	1.6	CFW320A01P6S1NB20	No	A	6.22 x 2.76 x 5.84	1.98	**$361**	V1M
	3/4	2.6	CFW320A02P6S1NB20	No	A	6.22 x 2.76 x 5.84	1.98	**$394**	V1M
	1	4.2	CFW320A04P2S1NB20	No	A	6.22 x 2.76 x 5.84	1.98	**$420**	V1M
	2	6.0	CFW320A06P0S1NB20	No	A	6.22 x 2.76 x 5.84	1.98	**$507**	V1M
	Input Power Supply: Single-Phase 200-240 VAC								
	1/4 or 1/3	1.6	CFW320A01P6S2NB20	No	A	6.22 x 2.76 x 5.84	1.98	**$323**	V1M
	3/4	2.6	CFW320A02P6S2NB20	No	A	6.22 x 2.76 x 5.84	1.98	**$348**	V1M
	1	4.2	CFW320A04P2S2NB20	No	A	6.22 x 2.76 x 5.84	1.98	**$371**	V1M
	2	6.0	CFW320A06P0S2NB20	No	A	6.22 x 2.76 x 5.84	1.98	**$461**	V1M
	2	7.3	CFW320A07P3S2NB20	No	A	6.22 x 2.76 x 5.84	1.98	**$543**	V1M
	3	10.0	CFW320B10P0B2DB20 [3]	Yes	B	8.08 x 2.76 x 6.24	2.95	**$648**	V1M
	Input Power Supply: Three-Phase 200-240 VAC								
	1/4 or 1/3	1.6	CFW320A01P6T2NB20	No	A	6.22 x 2.76 x 5.84	1.98	**$343**	V1M
	3/4	2.6	CFW320A02P6T2NB20	No	A	6.22 x 2.76 x 5.84	1.98	**$376**	V1M
	1	4.2	CFW320A04P2T2NB20	No	A	6.22 x 2.76 x 5.84	1.98	**$399**	V1M
	2	6.0	CFW320A06P0T2NB20	No	A	6.22 x 2.76 x 5.84	1.98	**$484**	V1M
	2	7.3	CFW320A07P3T2NB20	No	A	6.22 x 2.76 x 5.84	1.98	**$571**	V1M
	3	10.0	CFW320B10P0B2DB20 [3]	Yes	B	8.08 x 2.76 x 6.24	2.95	**$648**	V1M
	5	15.2	CFW320B15P2T2DB20	Yes	B	8.08 x 2.76 x 6.24	2.95	**$792**	V1M
460 VAC / Three-Phase [5]	**Input Power Supply: Three-Phase 460-480 VAC without Dynamic Braking Transistor**								
	1/2	1.1	CFW320A01P1T4NB20	No	A	6.22 x 2.76 x 5.84	1.98	**$466**	V1M
	1	1.8	CFW320A01P8T4NB20	No	A	6.22 x 2.76 x 5.84	1.98	**$474**	V1M
	1 1/2	2.6	CFW320A02P6T4NB20	No	A	6.22 x 2.76 x 5.84	1.98	**$483**	V1M
	2	3.5	CFW320A03P5T4NB20	No	A	6.22 x 2.76 x 5.84	1.98	**$519**	V1M
	3	4.8	CFW320A04P8T4NB20	No	A	6.22 x 2.76 x 5.84	1.98	**$639**	V1M
	3	5.6	CFW320B05P6T4NB20	No	B	8.08 x 2.76 x 6.24	2.95	**$786**	V1M
	5	7.6	CFW320B07P6T4NB20	No	B	8.08 x 2.76 x 6.24	2.95	**$809**	V1M
	5	8.3	CFW320C08P3T4NB20	No	C	8.43 x 3.5 x 6.45	3.30	**$886**	V1M
	7 1/2	11.0	CFW320C11P0T4NB20	No	C	8.43 x 3.5 x 6.45	3.30	**$919**	V1M
	10	14.0	CFW320C14P0T4NB20	No	C	8.43 x 3.5 x 6.45	3.30	**$1,137**	V1M
	Input Power Supply: Three-Phase 460-480 VAC with Dynamic Braking Transistor								
	1/2	1.1	CFW320B01P1T4DB20	Yes	B	8.08 x 2.76 x 6.24	2.95	**$488**	V1M
	1	1.8	CFW320B01P8T4DB20	Yes	B	8.08 x 2.76 x 6.24	2.95	**$498**	V1M
	1 1/2	2.6	CFW320B02P6T4DB20	Yes	B	8.08 x 2.76 x 6.24	2.95	**$512**	V1M
	2	3.5	CFW320B03P5T4DB20	Yes	B	8.08 x 2.76 x 6.24	2.95	**$566**	V1M
	3	4.8	CFW320B04P8T4DB20	Yes	B	8.08 x 2.76 x 6.24	2.95	**$714**	V1M
	3	5.6	CFW320B05P6T4DB20	Yes	B	8.08 x 2.76 x 6.24	2.95	**$833**	V1M
	5	7.6	CFW320B07P6T4DB20	Yes	B	8.08 x 2.76 x 6.24	2.95	**$854**	V1M
	5	8.3	CFW320C08P3T4DB20	Yes	C	8.43 x 3.5 x 6.45	3.30	**$935**	V1M
	7 1/2	11.0	CFW320C11P0T4DB20	Yes	C	8.43 x 3.5 x 6.45	3.30	**$966**	V1M
	10	14.0	CFW320C14P0T4DB20	Yes	C	8.43 x 3.5 x 6.45	3.30	**$1,196**	V1M

Notes:
1) "HP" rating based on WEG 4-Pole W22 motors' "average FLA values." Use as a guide only.
2) Motor FLA may vary with speed and manufacturer. ALWAYS compare motor FLA to drive output current.
3) "CFW320B10P0B2DB20" is capable of single-phase input without derating.
4) All the 230 VAC drives are rated for maximum ambient temperature of 50°C without derating.
5) All the 460 VAC drives are rated for maximum ambient temperature of 40°C without derating.

CFW320

Options & Accessories[1]

Type	Catalog Number	Slot	Three-Phase	Approx. Wt. (lbs)	List Price	Multiplier
Communication Module	CFW320-CRS485	1 (Upper)	RS-485 Module; 1 RS-485 Input (Modbus RTU / BACnet MS/TP), 1 Mini USB for Remote Keypad	0.2	$85	V1M
	CFW320-CRS232	1 (Upper)	RS-232 Communication Module (Modbus RTU); 1 RS232	0.2	$85	V1M
	CFW320-CCAN	1 (Upper)	CANopen/DeviceNet Comm. Module; 1 CAN/DeviceNet, External 24VDC Power	0.2	$100	V1M
	CFW320-CPDP	1 (Upper)	Profibus DP Communication Module; 1 Profibus DP 9-Pin Connector	0.2	$294	V1M
	CFW320-CUSB	1 (Upper)	USB Communication Module w/2-meter Cable; 1 Mini USB	0.2	$98	V1M
	CFW320-CETH	1 (Upper)	Dual Port Modbus TCP or Ethernet/IP Communication Module	0.2	$287	V1M
Remote Keypad	CFW320-KHMIR	1 (Upper)	Remote Keypad; Includes CFW320-CRS485 and 3-meter Cable	0.4	$266	V1M
I/O Expansion Modules[2]	CFW320-IOP	1 (Upper)	CFW320 Potentiometer Reference Module	0.2	$90	V1M
	CFW320-IOAR	2 (Lower)	I/O Expansion Module; 1 AI, 1 AO, 3 DOR, +10VDC	0.2	$146	V1M
	CFW320-IODR	2 (Lower)	I/O Expansion Module; 4 DI, 3 DOR	0.2	$112	V1M
	CFW320-IOAENC	2 (Lower)	I/O and Encoder Module; 1 AI, 2 AO, +10VDC, 1 Incremental Encoder Input +5VDC	0.2	$149	V1M
	CFW320-IOADR	2 (Lower)	I/O Expansion Module: 1 NTC, 3RO and 1 infrared input. Simple remote control with battery	0.2	$215	V1M
	CFW320-IOADR-D	2 (Lower)	I/O Expansion Module: 1 NTC, 3RO and 1 infrared input. Complete remote control with battery and DISPLAY	0.2	$245	V1M
	CFW320-IODF[3]	2 (Lower)	I/O Expansion Module: 3 Pulse/frequency Input and 3 Pulse/Frequency output (10 Hz to 3000 Hz)	0.2	$120	V1M
Flash Memory Module	MMF-uDrives	-	CFW100/3x0 Flash Memory Module	0.2	$218	GA (V1)
RFI Filter[4]	CFW320-KFA-S1-S2	-	RFI Filter accessory for CFW320 110V-240V frame size “A”	0.3	$93	V1M
	CFW320-KFB-S2	-	RFI Filter accessory for CFW320 200V-240V frame size “B”	0.3	$109	V1M
	CFW320-KFA-T2	-	RFI Filter accessory for CFW320 200V-240V frame size “A”	0.3	$173	V1M
	CFW320-KFB-T2	-	RFI Filter accessory for CFW320 200V-240V frame size “B”	0.3	$213	V1M
	CFW320-KFA-T4	-	RFI Filter accessory for CFW320 380V-480V frame size “A”	0.5	$173	V1M
	CFW320-KFB-T4	-	RFI Filter accessory for CFW320 380V-480V frame size “B”	0.5	$213	V1M
	CFW320-KFC-T4	-	RFI Filter accessory for CFW320 380V-480V frame size “C”	0.5	$226	V1M

Notes:
1) Up to Qty. (1) I/O Expansion Module plus Qty. (1) Communication Module can be added to the CFW320 VFD.
2) Option I/Os are in addition to the standard CFW320 I/O, which includes four (4) DI, 1 AI, 1 DOR.
3) The I/Os for “CFW320-IODF” module are only accessible through SoftPLC Application.
4) The RFI filters are not “UL” listed.

Please refer to back cover for description of “NOTES”

Data subject to change without notice.

Option Card I/O Table [6]

CFW320 Communication / I/O Modules	Slots[5]	Inputs			Outputs			Potentiometer for Speed Reference	USB[4]	Infrared Sensors & NTC[3]	Encoder input[2]	Network Communication		
		Analog	Digital	Frequency	Analog	Relay Digital	Frequency					RS485	RS232	Others
CFW320-CRS485	Upper slot	-	-	-	-	-	-	-	-	-	-	1	-	-
CFW320-CRS232		-	-	-	-	-	-	-	-	-	-	-	1	-
CFW320-CCAN		-	-	-	-	-	-	-	-	-	-	-	-	CANopen or DeviceNet
CFW320-CPDP		-	-	-	-	-	-	-	-	-	-	-	-	Profibus-DP
CFW320-CUSB		-	-	-	-	-	-	-	1	-	-	-	-	-
CFW320-IOP		-	-	-	-	-	-	1	-	-	-	-	-	-
CFW320-CETH		-	-	-	-	-	-	-	-	-	-	-	-	Ethernet/IP or Modbus TCP
CFW320-IOAR	Lower slot	1	-	-	1	3	-	-	-	-	-		-	-
CFW320-IODR 1		-	4	-	-	3	-	-	-	-	-	-	-	-
CFW320-IOAENC		1	-	-	2	-	-	-	-	-	1	-	-	-
CFW320-IOADR		1	-	-	-	3	-	-	-	1	-	-	-	-
CFW320-IOADR-D		-	-	-	-	3	-	-	-	1	-	-	-	-
CFW320-IODF		-	-	3	-	-	3	-	-	-	-	-	-	-

Notes:
1) Configurable isolated digital inputs (NPN or PNP).
2) An incremental encoder (A/A and B/B) with a power supply of +5 V at 100 mA for the encoder and a maximum frequency of 400 kHz.
3) Remote control and battery included.
4) USB cable included.
5) It allows one plug-in module in the upper slot (network communication) and one plug-in module in the lower slot (input/output expansion).
6) The standard version of the CFW320 already has four (4) configurable PNP or NPN digital inputs, one analog input 0 to 10 VDC / 4 to 20 mA, and one relay output 0.5 A / 250 VAC.

Dimensions

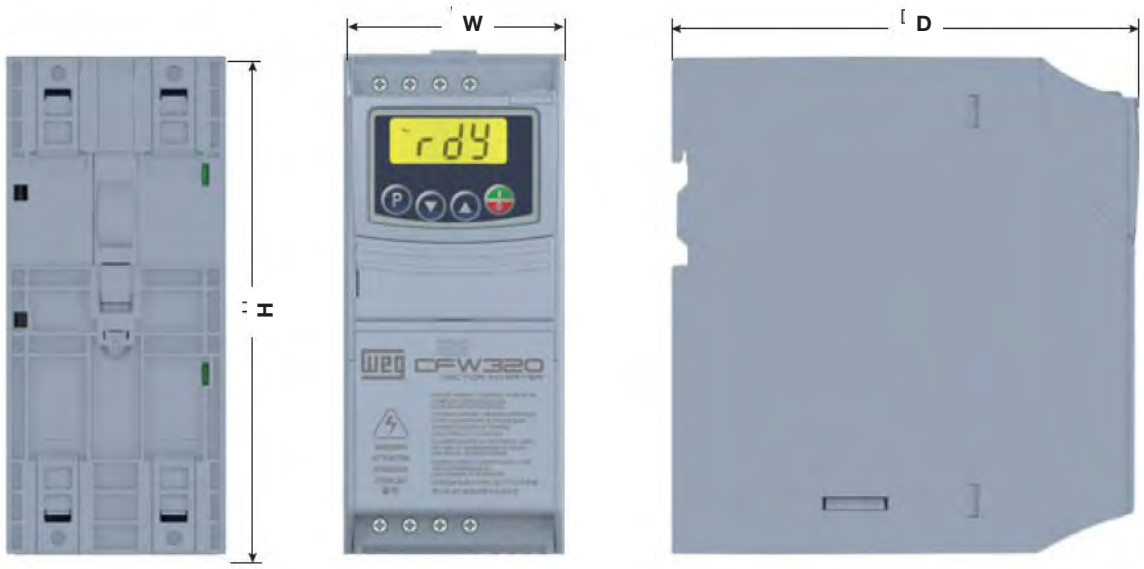

CFW320 Frame Size (IP20)	H in (mm)	W in (mm)	D in (mm)	Weight Lb (kg)
A (w/o RFI)	6.22 (157.9)	2.76 (70.0)	5.84 (148.4)	1.98 (0.90)
A (w/ RFI)	7.72 (196.0)	2.76 (70.0)	7.48 (190.1)	2.86 (1.30)
B (w/o RFI)	8.08 (198.9)	2.76 (70.0)	6.24 (158.4)	2.95 (1.34)
B (w/ RFI)	9.33 (237.0)	2.76 (70.0)	7.88 (200.1)	3.96 (1.80)
C (w/o RFI)	8.43 (214.0)	3.50 (89.0)	6.45 (164.0)	3.30 (1.50)
C (w/ RFI)	9.93 (252.3)	3.50 (89.0)	8.17 (207.5)	4.31 (1.96)

Please refer to back cover for description of “NOTES”

For detailed specifications, data sheets, drawings and performance curves visit http://www.weg.net

CFW320

Options & Accessories[1]

Input AC Power Supply	Voltage	Single-phase	110-127 VAC (+10%, -15%)
		Single-phase or three-phase	200-240 VAC (+10%, -15%)
		Three-phase	380-480 VAC (+10%, -15%)
	Frequency	50/60 Hz (Range: 48… 62 Hz)	
	Phase unbalance	≤ 3% between line voltages	
	Overvoltages / transients	Category III (EN 61010 / IEC61800-5-1 / UL61800-5-1)	
	Typical efficiency	≥ 97%	
	Audible noise level	< 60 dB	
Ambient	Operating ambient temperature	200V Line: from 32°F to 122°F (0°C to 50°C) 400V Line: from 32°F to 104°F (0°C to 40°C) For temperatures higher than specified above, it is necessary to apply 2% of current derating for each °C (1.1% for each °F), limited to an increase of 10°C (18°F).	
	Humidity	5 to 95 % non-condensing	
	Altitude	1,000 m w/o Derating 1,000 m to 4,000 m, 1% current derating for each 100 m above 1,000 m	
		From 2,000 m to 4,000 m above sea level – maximum voltage derating (127 V / 240 V / 480 V, according to the model) of 1.1% for each 100 m above 2,000 m	
	Pollution degree	2° (according to EN 50178 and UL 508C), with non-conductive pollution. Condensation must not cause the conduction of the accumulated residues.	
	Conformal coating	3C2 (IEC 60721-3-3:2002)	
	Vibration	Level 3M4	
Motor Control	Type of control	V/f (Scalar)	
		V/f (Quadratic)	
		VVW: Voltage Vector WEG	
	Modulation	PWM SVM (Space Vector Modulation)	
	Output frequency	0 to 400 Hz, resolution 0.1 Hz	
Performance	Speed control	V/f Control: Speed regulation: 1% of the rated speed (with sleep compensation) Speed variation range: 1:20	
		VVW: Voltage Vector WEG Speed regulation: 1% of the rated speed Speed variation range: 1:30	
Inputs[1]	Analog	One (1) isolated input: 0 to 10 V or 0 to 20 mA or 4 to 20 mA Linearity error ≤ 0.25% Impedance: 100 kΩ for voltage input, 500 Ω for current input Programmable functions Voltage on the inputs: 30 VDC	
	Digital	Four (4) isolated inputs Programmable functions: - Active high (PNP): maximum low level of 10 VDC, minimum high level 20 VDC - Active low (NPN): maximum low level of 5 VDC, minimum high level of 10 VDC Maximum input voltage of 30 VDC Input current: 11 mA Maximum input current: 20 mA	
Outputs[1]	Relay	One (1) relays with NO/NC contact Maximum voltage: 250 VAC Maximum current: 0.5 A Programmable functions	
	Power supply	10 VDC power supply maximum capacity: 50 mA	
Safety	Protection	Overcurrent/phase-phase short circuit in the output Under/overvoltage at the power supply Motor overload Overtemperature in the power module (IGBTs) External fault/alarm Programming error	
Keypad (HMI)	Built-in	4 keys: run/stop, increment, decrement and setting LCD display indication accuracy: - Current: 10% of the rated current - Speed resolution: 0.1 Hz	
Communication	Communication networks or accessibility	Modbus TCP, RS485 (Modbus RTU / BACnet), RS232, CANopen, DeviceNet, Ethernet/IP, Profibus-DP or USB Port (with plug-in modules)	
Protection Rating	IP20	Frames A, B & C	

Notes:
1) Available as a drive built-in I/Os.

Please refer to back cover for description of "NOTES"

Data subject to change without notice.

Technical Data

Safety Standards	UL61800-5-1: adjustable speed electrical power drive systems – Part 5-1: safety requirements – electrical, thermal and energy.	
	EN 61800-5-1: Safety requirements electrical, thermal and energy	
	EN 50178: Electronic equipment for use in power installations	
	EN 60204-1: Safety of machinery. Electrical equipment of machines. Part 1: general requirements Notes: the final assembler of the machine is responsible for installing a safety stop device and a supply disconnecting device	
	EN 60146 (IEC 146): Semiconductor converters	
	EN 61800-2: Adjustable speed electrical power drive systems – Part 2: General requirements – rating specifications for low voltage adjustable frequency AC power drive systems	
Electromagnetic Compatibility Standards (EMC)	EN 61800-3: Adjustable speed electrical power drive systems – Part 3: EMC product standard including specific test methods Maximum voltage: 30 VDC	
	CISPR 11: Industrial, scientific and medical (ISM) radio-frequency equipment – electromagnetic disturbance characteristics – limits and methods of measurement	
	EN 61000-4-2: Electromagnetic compatibility (EMC) – Part 4: Testing and measurement techniques – Sec. 2: Electrostatic discharge immunity test	
	EN 61000-4-3: Electromagnetic compatibility (EMC) – Part 4: Testing and measurement techniques – Sec. 3: Radiated, radio-frequency, electromagnetic field immunity test	
	EN 61000-4-4: Electromagnetic compatibility (EMC) – Part 4: Testing and measurement techniques – Sec. 4: Electrical fast transient/burst immunity test	
	EN 61000-4-5: Electromagnetic compatibility (EMC) – Part 4: Testing and measurement techniques – Sec. 5: Surge immunity test	
	EN 61000-4-6: Electromagnetic compatibility (EMC) – Part 4: Testing and measurement techniques – Sec. 6: Immunity to conducted disturbances, induced by radio-frequency fields	
Mechanical Standards	EN 60529: Degrees of protection provided by enclosures (IP code)	
	UL 50: Enclosures for electrical equipment	
	IEC 60721-3-3: Classification of environmental conditions – Part 3: Classification of groups of environmental parameters and their severities – Sec. 3: Stationary use at weather protected locations level	
Ecodesign Standards	IEC 61800-9-2 Parts 1 & 2: “Adjustable speed electrical power drive systems – Ecodesign for power drive systems, motor starters, power electronics and their driven applications”	
Functional Safety Standards	EN 61800-5-2: Adjustable speed electrical power drive systems – Part 5-2: Safety requirements – Functional	
	EN ISO 13849-1: Safety of machinery – Safety-related parts of control systems – Part 1: General principles for design	
	EN 62061: Safety of machinery – Functional safety of safety-related control systems	
	IEC 61508 Parts 1-7: Functional safety of electrical/electronic/programmable electronic safety-related systems	
	EN 60204-1: Safety of machinery – Electrical equipment of machines – Part 1: General requirements	
Certifications	cULus	Certificate number: UL-US-2214688-0; Report Reference: E184430-20220408
	CE	European Community
	UKCA	United Kingdom
	EAC	Russia
	C-Tick	Australia & New Zealand

CFW320

Dynamic Braking Resistors

100% Braking Torque at 20% Duty Cycle (12 Seconds Maximum Braking Time) – NEMA 1 Enclosure

Motor Voltage	Motor HP	CFW320 Catalog Number	Braking Resistor Catalog Number	Rated Ohms	Rated Watts	Dimensions (in) H x W x D [1]	List Price	Multiplier New (old)
3/230 VAC	3	CFW320B10P0B2DB20	CFDB2-63-448	63	500	5 x 12 x 7	$825	GA (V1)
	5	CFW320B15P2T2DB20	CFDB2-63-448	63	500	5 x 12 x 7	$825	GA (V1)
3/460 VAC	1/2	CFW320B01P1T4DB20	CFDB2-250-448	250	512	5 x 12 x 7	$825	GA (V1)
	1	CFW320B01P8T4DB20	CFDB2-250-448	250	512	5 x 12 x 7	$825	GA (V1)
	1 1/2	CFW320B02P6T4DB20	CFDB2-250-448	250	512	5 x 12 x 7	$825	GA (V1)
	2	CFW320B03P5T4DB20	CFDB2-250-448	250	512	5 x 12 x 7	$825	GA (V1)
	3	CFW320B04P8T4DB20	CFDB2-100-1119	100	1280	5 x 12 x 13	$1,225	GA (V1)
	3	CFW320B05P6T4DB20	CFDB2-100-1119	100	1280	5 x 12 x 13	$1,225	GA (V1)
	5	CFW320B07P6T4DB20	CFDB2-100-1119	100	1280	5 x 12 x 13	$1,225	GA (V1)
	5	CFW320C08P3T4DB20	CFDB2-50-2238	50	2560	5 x 19 x 13	$1,965	GA (V1)
	7 1/2	CFW320C11P0T4DB20	CFDB2-50-2238	50	2560	5 x 19 x 13	$1,965	GA (V1)
	10	CFW320C14P0T4DB20	CFDB2-50-2238	50	2560	5 x 19 x 13	$1,965	GA (V1)

Notes:
1) Dimensions are provided for estimating purposes only.

CFW500-G2 Series – Variable Speed Drive

The CFW500 has advanced technology plug-and-play options developed for fast commissioning, providing great flexibility and competitive advantage while offering excellent performance and reliability. Designed for exclusively industrial or professional use, perfect for OEM, system integrators, panel installers, and End Users, providing great benefit from the added value. The second-generation (G2) CFW500 drives now offer more features in the same footprint as first-generation (G1) drives. The power range of the CFW500-IP20-G2 drive is now extended to 75 HP at 230 VAC and 175 HP at 460 VAC. The CFW500-G2 drive is also available in the IP66/NEMA 4X Washdown enclosure, which is rated for indoor and outdoor installation in direct sunlight.

For Indoor Use

For Indoor / Outdoor Use

Standard Features

- Same programming as other WEG VFDs including CFW500 G1 drives
- Built-in SoftPLC
- Control Mode: Scalar, VVW (Voltage Vector WEG), Vector Control (sensorless and closed loop with encoder feedback), VVW PM (suitable for fan, pump, and compressor).
- IP20 and NEMA 1 (with NEMA 1 kit) Enclosure
- NEMA 4X (IP66) Washdown Enclosure with and without disconnect switch, suitable for indoor and outdoor use (in direct sunlight)
- 200-240V, 380-480V or 500-600 input voltage
- Heavy duty rated – 150% current overload capacity
- 0 to 500 Hz output frequency
- 2.5 to 15 kHz adjustable switching frequency (5 kHz standard)
- Built-in 24 VDC Power supply (maximum 150 mA)
- Built-in RS-485 (Modbus RTU/BACnet) communication
- Four isolated programmable digital inputs
- One programmable relay output (1NO, 1NC, 240 VAC 0.5A)
- One programmable transistor output
- One isolated programmable analog input (0 to 10V, 0/4 to 20 mA)
- One isolated programmable analog output (0-10V, 0/4-20 mA)
- Optional safe torque off module
- Pump Genius – Simplex, Multiplex (up to three pumps in parallel) like CFW11 Pump Genius
- WLP and WPS compatible

Applications

- Pumps
- Fans/ventilators
- Blowers
- Conveyors
- Rollout tables
- Mixers/blenders
- Commercial dryers
- Extruders
- General machinery
- Agitators
- Any washdown (for NEMA 4X/IP66)

CFW500-G2 Catalog Number Sequence

CFW500	A	01P6	T	4	NB	20	G2

CFW500	A	02P6	B	2	DB	66	DS	G2

Frame Size
A, B, C, D, E, F, G

O/P Current
01P6 = 1.6 Amps
02P6 = 2.6 Amps
06P5 = 6.5 Amps
07P3 = 7.3 Amps
10P0 = 10.0 Amps
16P0 = 16 Amps
24P0 = 24 Amps
49P0 = 49 Amps
56P0 = 56 Amps
88P0 = 88 Amps
0105 = 105 Amps
0142 = 142 Amps
0180 = 180 Amps
0211 = 211 Amps

Supply Phases
S = Single-phase
B = Single-phase or Three-phase
T = Three-phase

Supply Voltage
2 = 200-240 VAC
4 = 380-480 VAC
5 = 500-600 VAC

Options
NB = No Internal DB
DB = With Internal DB

20 = IP20 Encl.
66 = NEMA 4X/IP66

DS = With Disconnect Switch
G2 = Generation 2

Chart intended as reference only and not to create part numbers.

CFW500 – IP20 – G2 (GENERATION 2)

IP20 Finger Safe Enclosure

Motor Voltage	ND / VT[1]		HD / CT[1]		Catalog Number	Braking Transistor	Frame Size[4]	Dimensions (in) H x W x D	Approx. Weight (lbs)	List Price	Multiplier New (old)
	Motor HP[2]	Drive Amps[3]	Motor HP[2]	Drive Amps[3]							
230 VAC / Three-Phase	**Input Power Supply: Single-Phase 200-240 VAC**										
	1/3	1.6	1/3	1.6	CFW500A01P6S2NB20G2	No	A	7.5 x 3.0 x 5.9	1.8	**$451**	V1G (V1)
	3/4	2.6	3/4	2.6	CFW500A02P6S2NB20G2	No	A	7.5 x 3.0 x 5.9	1.8	**$463**	V1G (V1)
	1 1/2	4.3	1 1/2	4.3	CFW500A04P3S2NB20G2	No	A	7.5 x 3.0 x 5.9	1.8	**$499**	V1G (V1)
	2	7.3	2	7.3	CFW500A07P0S2NB20G2	No	A	7.5 x 3.0 x 5.9	1.8	**$633**	V1G (V1)
	Input Power Supply: Single-Phase or Three-Phase 200-240 VAC										
	1/3	1.6	1/3	1.6	CFW500A01P6B2NB20G2	No	A	7.5 x 3.0 x 5.9	1.8	**$456**	V1G (V1)
	3/4	2.6	3/4	2.6	CFW500A02P6B2NB20G2	No	A	7.5 x 3.0 x 5.9	1.8	**$467**	V1G (V1)
	1 1/2	4.3	1 1/2	4.3	CFW500A04P3B2NB20G2	No	A	7.5 x 3.0 x 5.9	1.8	**$506**	V1G (V1)
	2	7.3	2	7.3	CFW500B07P3B2DB20G2	Yes	B	7.9 x 4.0 x 6.3	2.6	**$678**	V1G (V1)
	3	10.0	3	10.0	CFW500B10P0B2DB20G2	Yes	B	7.9 x 4.0 x 6.3	2.6	**$789**	V1G (V1)
	Input Power Supply: Three-Phase 200-240 VAC										
	2	7.0	2	7.0	CFW500A07P0T2NB20G2	No	A	7.5 x 3.0 x 5.9	1.8	**$628**	V1G (V1)
	3	9.6	3	9.6	CFW500A09P6T2NB20G2	No	A	7.5 x 3.0 x 5.9	1.8	**$773**	V1G (V1)
	5	16	5	16	CFW500B16P0T2DB20G2	Yes	B	7.9 x 4.0 x 6.3	2.6	**$842**	V1G (V1)
	7 1/2	24	7 1/2	24	CFW500C24P0T2DB20G2	Yes	C	8.3 x 5.3 x 6.5	4.4	**$1,427**	V1G (V1)
	10	28	10	28	CFW500D28P0T2DB20G2	Yes	D	12.1 x 7.1 x 6.6	9.5	**$1,777**	V1G (V1)
	10	33	10	33	CFW500D33P0T2DB20G2	Yes	D	12.1 x 7.1 x 6.6	9.5	**$2,146**	V1G (V1)
	15	47	15	47	CFW500D47P0T2DB20G2	Yes	D	12.1 x 7.1 x 6.6	9.5	**$2,910**	V1G (V1)
	25[5]	70[5]	20	56	CFW500E56P0T2DB20G2[5]	Yes	E	13.8 x 8.7 x 7.6	22.1	**$3,380**	V1G (V1)
	25	77	20	64	CFW500F77P0T2DB20G2	Yes	F	21.6 x 11.8 x 10	57.3	**$4,150**	V1G (V1)
	30	88	25	75	CFW500F88P0T2DB20G2	Yes	F	21.6 x 11.8 x 10	57.3	**$5,200**	V1G (V1)
	40	105	30	88	CFW500F0105T2DB20G2	Yes	F	21.6 x 11.8 x 10	57.3	**$7,050**	V1G (V1)
	50	145	40	115	CFW500G0145T2NB20G2	No	G	26.6 x 13.2 x 12.4	114.6	**$8,500**	V1G (V1)
	60	180	50	145	CFW500G0180T2NB20G2	No	G	26.6 x 13.2 x 12.4	114.6	**$10,250**	V1G (V1)
	75	211	60	180	CFW500G0211T2NB20G2	No	G	26.6 x 13.2 x 12.4	114.6	**$13,500**	V1G (V1)
	50	145	40	115	CFW500G0145T2DB20G2	Yes	G	26.6 x 13.2 x 12.4	114.6	**$9,095**	V1G (V1)
	60	180	50	145	C FW500G0180T2DB20G2	Yes	G	26.6 x 13.2 x 12.4	114.6	**$10,965**	V1G (V1)
	75	211	60	180	CFW500G0211T2DB20G2	Yes	G	26.6 x 13.2 x 12.4	114.6	**$14,445**	V1G (V1)

Notes:
1) ND (normal duty) / VT (variable torque): 110% overload / 60 seconds; HD (heavy duty) / CT (constant torque): 150% overload / 60 seconds.
2) "HP" rating based on WEG W22 motors "average FLA values". Use as a guide only.
3) Motor FLA may vary with speed and manufacturer. ALWAYS compare motor FLA to nominal amps of drive.
4) Frame size A to D are rated for 50°C.
5) Frame size E needs to have firmware version 3.7x or higher to be used as ND. Frame size E is rated for 40°C if used as ND/VT and 50°C if used as HD/CT. Frame size F is rated for 40°C. Frame size G is rated for 45°C. CFW500 Frame size F and G VFDs have built in Dual DC Bus Chokes.

CFW500

CFW500 – IP20 – G2 (GENERATION 2)

IP20 Finger Safe Enclosure

Motor Voltage	ND / VT[1]		HD / CT[1]		Catalog Number	Braking Transistor	Frame Size[4]	Dimensions (in) H x W x D	Approx. Weight (lbs)	List Price	Multiplier New (old)
	Motor HP[2]	Drive Amps[3]	Motor HP[2]	Drive Amps[3]							
460 VAC / Three-Phase	Input Power Supply: Three-Phase 380-480 VAC										
	1/2	1.0	1/2	1.0	CFW500A01P0T4NB20G2	No	A	7.5 x 3.0 x 5.9	1.8	$582	V1G (V1)
	1	1.6	1	1.6	CFW500A01P6T4NB20G2	No	A	7.5 x 3.0 x 5.9	1.8	$604	V1G (V1)
	1 1/2	2.6	1 1/2	2.6	CFW500A02P6T4NB20G2	No	A	7.5 x 3.0 x 5.9	1.8	$649	V1G (V1)
	3	4.3	3	4.3	CFW500A04P3T4NB20G2	No	A	7.5 x 3.0 x 5.9	1.8	$799	V1G (V1)
	3	6.1	3	6.1	CFW500A06P1T4NB20G2	No	A	7.5 x 3.0 x 5.9	1.8	$982	V1G (V1)
	1 1/2	2.6	1 1/2	2.6	CFW500B02P6T4DB20G2	Yes	B	7.9 x 4.0 x 6.3	2.6	$708	V1G (V1)
	3	4.3	3	4.3	CFW500B04P3T4DB20G2	Yes	B	7.9 x 4.0 x 6.3	2.6	$892	V1G (V1)
	5	6.5	5	6.5	CFW500B06P5T4DB20G2	Yes	B	7.9 x 4.0 x 6.3	2.6	$1,067	V1G (V1)
	7 1/2	10	7 1/2	10	CFW500B10P0T4DB20G2	Yes	B	7.9 x 4.0 x 6.3	2.6	$1,207	V1G (V1)
	10	14	10	14	CFW500C14P0T4DB20G2	Yes	C	8.3 x 5.3 x 6.5	4.4	$1,495	V1G (V1)
	10	16	10	16	CFW500C16P0T4DB20G2	Yes	C	8.3 x 5.3 x 6.5	4.4	$1,684	V1G (V1)
	15	24	15	24	CFW500D24P0T4DB20G2	Yes	D	12.1 x 7.1 x 6.6	9.5	$2,229	V1G (V1)
	20/25	31	20/25	31	CFW500D31P0T4DB20G2	Yes	D	12.1 x 7.1 x 6.6	9.5	$2,783	V1G (V1)
	30[5]	45[5]	30	39	CFW500E39P0T4DB20G2[5]	Yes	E	13.8 x 8.7 x 7.6	22.1	$3,346	V1G (V1)
	40[5]	58.5[5]	40	49	CFW500E49P0T4DB20G2[5]	Yes	E	13.8 x 8.7 x 7.6	22.1	$4,214	V1G (V1)
	50/60	77	50	61	CFW500F77P0T4DB20G2	Yes	F	21.6 x 11.8 x 10	57.3	$5,700	V1G (V1)
	75	88	60	73	CFW500F88P0T4DB20G2	Yes	F	21.6 x 11.8 x 10	57.3	$7,300	V1G (V1)
	75	105	75	88	CFW500F0105T4DB20G2	Yes	F	21.6 x 11.8 x 10	57.3	$8,900	V1G (V1)
	100/125	142	100	115	CFW500G0142T4NB20G2	No	G	26.6 x 13.2 x 12.4	114.6	$10,200	V1G (V1)
	150	180	125	142	CFW500G0180T4NB20G2	No	G	26.6 x 13.2 x 12.4	114.6	$12,500	V1G (V1)
	175	211	150	180	CFW500G0211T4NB20G2	No	G	26.6 x 13.2 x 12.4	114.6	$14,500	V1G (V1)
	100/125	142	100	115	CFW500G0142T4DB20G2	Yes	G	26.6 x 13.2 x 12.4	114.6	$10,915	V1G (V1)
	150	180	125	142	CFW500G0180T4DB20G2	Yes	G	26.6 x 13.2 x 12.4	114.6	$13,375	V1G (V1)
	175	211	150	180	CFW500G0211T4DB20G2	Yes	G	26.6 x 13.2 x 12.4	114.6	$15,515	V1G (V1)
575 VAC / Phase[6]	Input Power Supply: Three-Phase 500-600 VAC										
	1 1/2	1.7	1 1/2	1.7	CFW500C01P7T5DB20	Yes	C	8.3 x 5.3 x 6.5	4.4	$910	V1G (V1)
	3	3.0	3	3.0	CFW500C03P0T5DB20	Yes	C	8.3 x 5.3 x 6.5	4.4	$954	V1G (V1)
	3	4.3	3	4.3	CFW500C04P3T5DB20	Yes	C	8.3 x 5.3 x 6.5	4.4	$1,073	V1G (V1)
	7 1/2	7.0	7 1/2	7.0	CFW500C07P0T5DB20	Yes	C	8.3 x 5.3 x 6.5	4.4	$1,276	V1G (V1)
	10	10.0	10	10.0	CFW500C10P0T5DB20	Yes	C	8.3 x 5.3 x 6.5	4.4	$1,621	V1G (V1)
	10	12.0	10	12.0	CFW500C12P0T5DB20	Yes	C	8.3 x 5.3 x 6.5	4.4	$1,813	V1G (V1)

Notes:
1) ND (normal duty) / VT (variable torque): 110% overload / 60 seconds; HD (heavy duty) / CT (constant torque): 150% overload / 60 seconds.
2) "HP" rating based on WEG W22 motors "average FLA values". Use as a guide only.
3) Motor FLA may vary with speed and manufacturer. ALWAYS compare motor FLA to nominal amps of drive.
4) Frame size A to D are rated for 50°C.
5) Frame size E needs to have firmware version 3.7x or higher to be used as ND. Frame size E is rated for 40°C if used as ND/VT and 50°C if used as HD/CT. Frame size F is rated for 40°C. Frame size G is rated for 45°C. CFW500 Frame size F and G VFDs have built in Dual DC Bus Chokes.
6) All 575V drives are non-stocked items and are still Generation-1 drives, consult WEG for availability.

Please refer to back cover for description of "NOTES"

Data subject to change without notice.

CFW500 – N4X/IP66 Washdown VFD W/O Disconnect Switch

Motor Voltage	ND/VT[1] Motor HP[2]	ND/VT[1] Drive Amps[3]	HD/CT[1] Motor HP[2]	HD/CT[1] Drive Amps[3]	Catalog Number	Braking Transistor	Frame Size[4]	Dimensions (in) H x W x D	Approx. Weight (lbs)	List Price	Multiplier New (old)
230 VAC / Three-Phase	**Input Power Supply: Single or Three-Phase 200-240 VAC**										
	1/3	1.6	1/3	1.6	CFW500A01P6B2DB66G2	Yes	A	10.4 x 6.5 x 8.9	22.0	**$775**	V1W (V1)
	3/4	2.6	3/4	2.6	CFW500A02P6B2DB66G2	Yes	A	10.4 x 6.5 x 8.9	22.0	**$800**	V1W (V1)
	1 1/2	4.3	1 1/2	4.3	CFW500A04P3B2DB66G2	Yes	A	10.4 x 6.5 x 8.9	22.0	**$850**	V1W (V1)
	2	7.3	2	7.3	CFW500A07P3B2DB66G2	Yes	A	10.4 x 6.5 x 8.9	22.0	**$1,015**	V1W (V1)
	3	10	3	10	CFW500A10P0B2DB66G2	Yes	A	10.4 x 6.5 x 8.9	22.0	**$1,095**	V1W (V1)
	Input Power Supply: Three-Phase 200-240 VAC										
	5	16	5	16	CFW500A16P0T2DB66G2	Yes	A	10.4 x 6.5 x 8.9	22.0	**$1,350**	V1W (V1)
	7 1/2	24	7 1/2	24	CFW500B24P0T2DB66G2	Yes	B	13.4 x 8.5 x 8.9	26.5	**$1,950**	V1W (V1)
	10	28	10	28	CFW500B28P0T2DB66G2	Yes	B	13.4 x 8.5 x 8.9	26.5	**$2,275**	V1W (V1)
	10	33	10	33	CFW500B33P0T2DB66G2	Yes	B	13.4 x 8.5 x 8.9	26.5	**$2,675**	V1W (V1)
	15	47	15	47	CFW500C47P0T2DB66G2	Yes	C	18.7 x 12.6 x 11.4	45.0	**$3,750**	V1W (V1)
	25	70	20	56	CFW500C56P0T2DB66G2	Yes	C	18.7 x 12.6 x 11.4	45.0	**$4,400**	V1W (V1)
460 VAC / Three-Phase	**Input Power Supply: Three-Phase 380-480 VAC**										
	1/2	1	1/2	1	CFW500A01P0T4DB66G2	Yes	A	10.4 x 6.5 x 8.9	22.0	**$950**	V1W (V1)
	1	1.6	1	1.6	CFW500A01P6T4DB66G2	Yes	A	10.4 x 6.5 x 8.9	22.0	**$975**	V1W (V1)
	1 1/2	2.6	1 1/2	2.6	CFW500A02P6T4DB66G2	Yes	A	10.4 x 6.5 x 8.9	22.0	**$990**	V1W (V1)
	3	4.3	3	4.3	CFW500A04P3T4DB66G2	Yes	A	10.4 x 6.5 x 8.9	22.0	**$1,175**	V1W (V1)
	5	6.5	5	6.5	CFW500A06P5T4DB66G2	Yes	A	10.4 x 6.5 x 8.9	22.0	**$1,400**	V1W (V1)
	7 1/2	10	7 1/2	10	CFW500A10P0T4DB66G2	Yes	A	10.4 x 6.5 x 8.9	22.0	**$1,650**	V1W (V1)
	10	14	10	14	CFW500B14P0T4DB66G2	Yes	B	13.4 x 8.5 x 8.9	26.5	**$2,050**	V1W (V1)
	10	16	10	16	CFW500B16P0T4DB66G2	Yes	B	13.4 x 8.5 x 8.9	26.5	**$2,275**	V1W (V1)
	15	24	15	24	CFW500B24P0T4DB66G2	Yes	B	13.4 x 8.5 x 8.9	26.5	**$3,025**	V1W (V1)
	25	31	25	31	CFW500B31P0T4DB66G2	Yes	B	13.4 x 8.5 x 8.9	26.5	**$3,650**	V1W (V1)
	30	45	30	39	CFW500C39P0T4DB66G2	Yes	C	18.7 x 12.6 x 11.4	45.0	**$4,795**	V1W (V1)
	50	59.2	40	49	CFW500C49P0T4DB66G2	Yes	C	18.7 x 12.6 x 11.4	45.0	**$6,100**	V1W (V1)
575 VAC / Three-Phase[5]	**Input Power Supply: Three-Phase 500-600 VAC**										
	1 1/2	1.7	1 1/2	1.7	CFW500B01P7T5DB66	Yes	B	13.4 x 8.5 x 8.9	26.5	**$1,590**	V1W (V1)
	3	3	3	3	CFW500B03P0T5DB66	Yes	B	13.4 x 8.5 x 8.9	26.5	**$1,670**	V1W (V1)
	3	4.3	3	4.3	CFW500B04P3T5DB66	Yes	B	13.4 x 8.5 x 8.9	26.5	**$1,890**	V1W (V1)
	7 1/2	7	7 1/2	7	CFW500B07P0T5DB66	Yes	B	13.4 x 8.5 x 8.9	26.5	**$2,115**	V1W (V1)
	10	10	10	10	CFW500B10P0T5DB66	Yes	B	13.4 x 8.5 x 8.9	26.5	**$2,330**	V1W (V1)
	10	12	10	12	CFW500B12P0T5DB66	Yes	B	13.4 x 8.5 x 8.9	26.5	**$2,615**	V1W (V1)

Notes:
1) ND (Normal Duty) / VT (Variable Torque): 110% Overload / 60 seconds; HD (Heavy Duty) / CT (Constant Torque): 150% Overload / 60 seconds.
2) "HP" rating based on WEG W22 motors "average FLA values". Use as a guide only.
3) Motor FLA may vary with speed and manufacturer. ALWAYS compare motor FLA to nominal amps of drive.
4) Frame size A, B and C are rated for 40°C ambient temperature.
5) All 575V drives are non-stocked items and are still Generation-1 drives, consult WEG for availability.

CFW500

CFW500 – N4X/IP66 Washdown VFD With Disconnect Switch

Motor Voltage	ND/VT[1]		HD/CT[1]		Catalog Number	Braking Transistor	Frame Size[4]	Dimensions (in) H x W x D	Approx. Weight (lbs)	List Price	Multiplier New (old)
	Motor HP[2]	Drive Amps[3]	Motor HP[2]	Drive Amps[3]							
230 VAC / Three-Phase	Input Power Supply: Single or Three-Phase 200-240 VAC										
	1/3	1.6	1/3	1.6	CFW500A01P6B2DB66DSG2	Yes	A	10.4 x 6.5 x 9.9	22.0	$895	V1W (V1)
	3/4	2.6	3/4	2.6	CFW500A02P6B2DB66DSG2	Yes	A	10.4 x 6.5 x 9.9	22.0	$920	V1W (V1)
	1 1/2	4.3	1 1/2	4.3	CFW500A04P3B2DB66DSG2	Yes	A	10.4 x 6.5 x 9.9	22.0	$980	V1W (V1)
	2	7.3	2	7.3	CFW500A07P3B2DB66DSG2	Yes	A	10.4 x 6.5 x 9.9	22.0	$1,170	V1W (V1)
	3	10	3	10	CFW500A10P0B2DB66DSG2	Yes	A	10.4 x 6.5 x 9.9	22.0	$1,255	V1W (V1)
	Input Power Supply: Three-Phase 200-240 VAC										
	5	16	5	16	CFW500A16P0T2DB66DSG2	Yes	A	10.4 x 6.5 x 9.9	22.0	$1,555	V1W (V1)
	7 1/2	24	7 1/2	24	CFW500B24P0T2DB66DSG2	Yes	B	13.4 x 8.5 x 9.9	26.5	$2,245	V1W (V1)
	10	28	10	28	CFW500B28P0T2DB66DSG2	Yes	B	13.4 x 8.5 x 9.9	26.5	$2,620	V1W (V1)
	10	33	10	33	CFW500B33P0T2DB66DSG2	Yes	B	13.4 x 8.5 x 9.9	26.5	$3,080	V1W (V1)
	15	47	15	47	CFW500C47P0T2DB66DSG2	Yes	C	18.7 x 12.6 x 12.4	45.0	$4,313	V1W (V1)
	25	70	20	56	CFW500C56P0T2DB66DSG2	Yes	C	18.7 x 12.6 x 12.4	45.0	$5,060	V1W (V1)
460 VAC / Three-Phase	Input Power Supply: Three-Phase 380-480 VAC										
	1/2	1	1/2	1	CFW500A01P0T4DB66DSG2	Yes	A	10.4 x 6.5 x 9.9	22.0	$1,095	V1W (V1)
	1	1.6	1	1.6	CFW500A01P6T4DB66DSG2	Yes	A	10.4 x 6.5 x 9.9	22.0	$1,125	V1W (V1)
	1 1/2	2.6	1 1/2	2.6	CFW500A02P6T4DB66DSG2	Yes	A	10.4 x 6.5 x 9.9	22.0	$1,140	V1W (V1)
	3	4.3	3	4.3	CFW500A04P3T4DB66DSG2	Yes	A	10.4 x 6.5 x 9.9	22.0	$1,350	V1W (V1)
	5	6.5	5	6.5	CFW500A06P5T4DB66DSG2	Yes	A	10.4 x 6.5 x 9.9	22.0	$1,610	V1W (V1)
	7 1/2	10	7 1/2	10	CFW500A10P0T4DB66DSG2	Yes	A	10.4 x 6.5 x 9.9	22.0	$1,900	V1W (V1)
	10	14	10	14	CFW500B14P0T4DB66DSG2	Yes	B	13.4 x 8.5 x 9.9	26.5	$2,360	V1W (V1)
	10	16	10	16	CFW500B16P0T4DB66DSG2	Yes	B	13.4 x 8.5 x 9.9	26.5	$2,620	V1W (V1)
	15	24	15	24	CFW500B24P0T4DB66DSG2	Yes	B	13.4 x 8.5 x 9.9	26.5	$3,480	V1W (V1)
	25	31	25	31	CFW500B31P0T4DB66DSG2	Yes	B	13.4 x 8.5 x 9.9	26.5	$4,200	V1W (V1)
	30	45	30	39	CFW500C39P0T4DB66DSG2	Yes	C	18.7 x 12.6 x 12.4	45.0	$5,514	V1W (V1)
	50	59.2	40	49	CFW500C49P0T4DB66DSG2	Yes	C	18.7 x 12.6 x 12.4	45.0	$7,015	V1W (V1)
575 VAC / Three-Phase[5]	Input Power Supply: Three-Phase 500-600 VAC										
	1 1/2	1.7	1 1/2	1.7	CFW500B01P7T5DB66DS	Yes	B	13.4 x 8.5 x 9.9	26.5	$1,830	V1W (V1)
	3	3	3	3	CFW500B03P0T5DB66DS	Yes	B	13.4 x 8.5 x 9.9	26.5	$1,925	V1W (V1)
	3	4.3	3	4.3	CFW500B04P3T5DB66DS	Yes	B	13.4 x 8.5 x 9.9	26.5	$2,175	V1W (V1)
	7 1/2	7	7 1/2	7	CFW500B07P0T5DB66DS	Yes	B	13.4 x 8.5 x 9.9	26.5	$2,435	V1W (V1)
	10	10	10	10	CFW500B10P0T5DB66DS	Yes	B	13.4 x 8.5 x 9.9	26.5	$2,680	V1W (V1)
	10	12	10	12	CFW500B12P0T5DB66DS	Yes	B	13.4 x 8.5 x 9.9	26.5	$3,005	V1W (V1)

Notes:
1) ND (Normal Duty) / VT (Variable Torque): 110% Overload / 60 seconds; HD (Heavy Duty) / CT (Constant Torque): 150% Overload / 60 seconds.
2) "HP" rating based on WEG W22 motors "average FLA values". Use as a guide only.
3) Motor FLA may vary with speed and manufacturer. ALWAYS compare motor FLA to nominal amps of drive.
4) Frame size A, B and C are rated for 40°C ambient temperature.
5) All 575V drives are non-stocked items and are still Generation-1 drives, consult WEG for availability.

Please refer to back cover for description of "NOTES"

Data subject to change without notice.

Options & Accessories

Type	Catalog Number	Description	Approx. Shpg. Wt. (lbs)	List Price	Multiple New (old)
I/O	CFW500-IOS [1]	CFW500 I/O Module; 4 DI, 1 AI, 1 AO, 1 DOR, 1 DOT, 1 RS485, 10VDC, 24VDC	0.2	**$110**	V1G (V1)
I/O	CFW500-IOD	CFW500 I/O Module; 8 DI, 1 AI, 1 AO, 1 DOR, 4 DOT, 1 RS485, 10VDC, 24VDC	0.2	**$141**	V1G (V1)
I/O	CFW500-IOAD	CFW500 I/O Module; 6 DI, 3 AI, 2 AO, 1 DOR, 3 DOT, 1 RS485, 10VDC, 24VDC	0.2	**$182**	V1G (V1)
I/O	CFW500-IOR-B	CFW500 I/O Module; 5 DI, 1 AI, 1 AO, 4 DOR, 1 DOT, 1 RS485, 10VDC, 24VDC	0.2	**$125**	V1G (V1)
Encoder Input	CFW500-ENC	CFW500 Encoder Module; Quad Input A and B, 1 RS485, 5 DI, 1 AI, 1 AO, 3 DOR, 1 DOT, 24 VDC	0.2	**$210**	V1G (V1)
USB Card	CFW500-CUSB	CFW500 Comm. Module; 1 USB, 1 RS485, 4 DI, 1 AI, 1 AO, 1 DOR, 1 DOT, 10VDC, 24VDC	0.2	**$210**	V1G (V1)
RS232 Card	CFW500-CRS232	CFW500 Comm. Module; 1 RS232, 1 RS485, 4 DI, 1 AI, 1 AO, 1 DOR, 1 DOT, 24VDC	0.2	**$138**	V1G (V1)
RS485 Card	CFW500-CRS485-B	CFW500 Comm. Module; 2 RS485, 4 DI, 2 AI, 1 AO, 2 DOR, 1 DOT, 10VDC, 24VDC	0.2	**$143**	V1G (V1)
CANopen Card	CFW500-CCAN	CFW500 Comm. Module; 1 CAN/DeviceNet, 1 RS485, 2 DI, 1 AI, 1 AO, 1 DOR, 1 DOT, 10VDC, 24VDC	0.2	**$138**	V1G (V1)
Profibus DP Card	CFW500-CPDP	CFW500 Comm. Module; 2 DI, 1 AI, 1 AO, 1 DOR, 1 DOT, 1 Profibus DP, 1 RS485, 24VDC (DB9 connector)	0.2	**$405**	V1G (V1)
Profibus DP and DP-V1 Module	CFW500-CPDP2	CFW500 Comm. Module; 1-Profibus DP and DP-V1 100BASE TX RJ-45 Port, 1-RS485, 2-DI, 1-AI, 1-AO, 1-DOR, 1-DOT, 24VDC (Terminal Block Connector)	0.2	**$445**	V1G (V1)
Modbus TCP Comm. Module	CFW500-CEMB-TCP	CFW500 Comm. Module; 1-Modbus TCP 100BASE TX RJ-45 Port, 1-RS485, 2-DI, 1-AI, 1-AO, 1-DOR, 1-DOT, 24VDC	0.2	**$499**	V1G (V1)
ProfiNet I/O Comm. Module	CFW500-CEPN-IO	CFW500 Comm. Module; 1-ProfiNet I/O 100BASE TX RJ-45 Port, 1-RS485, 2-DI, 1-AI, 1-AO, 1-DOR, 1-DOT, 24VDC	0.2	**$499**	V1G (V1)
EtherNet IP Comm. Module	CFW500-CETH-IP	CFW500 Comm. Module; 2-DI, 1-AI, 1-AO, 1-DOR, 1-DOT, 1-RS485, 1-EtherNet IP 100BASE TX RJ-45 Port, 24VDC	0.2	**$499**	V1G (V1)
Dual Port Ethernet Module (Ethernet/IP or Modbus TCP)	CFW500-CETH2	CFW500 Dual Port Comm. Module: 2-DI, 1-AI, 1-DOT, 1-RS485, 2-EtherNet 100BASE TX RJ-45 Ports. Notes: The module will require external 24VDC power to use 1-DOT. The CFW500-G2 drive must have FM V3.9x or above to use this module.	0.3	**$575**	V1G (V1)
STO Module	CFW500-SFY2 [2]	CFW500 Safety Function Module; Safe Torque Off (STO) / Stop Category 0, Safe Stop 1 Time Controlled (SS1-t) / Stop Category 1; Safety Category: SIL 3, PL e	1.8	**$140**	V1G (V1)
STO Module Plug	CFW50X-STO-JMP	CFW50x STO module plug	0.2	**$12**	PTD
Flash Memory Module	CFW500-MMF	CFW500 Flash Memory Module for saving and reloading program and parameters to / from the drive.	0.2	**$189**	V1G (V1)
Remote Keypad: Non Text	CFW500-HMIR [3]	CFW500 Remote non-text Keypad for mounting through enclosure door (Mounting Frame Kit is not required).	0.6	**$169**	V1G (V1)
Remote Keypad: Advanced Text	HMI-01 [4]	CFW500 Remote Advanced Text Keypad for mounting through enclosure door (Mounting Frame Kit is required).	0.4	**$205**	V1G (V1)
Remote Keypad: Advanced Text Frame Kit	CFW500-RHMIF	CFW500 Remote Advanced Text Keypad enclosure door mounting frame kit	0.5	**$25**	V1G (V1)
HMI Cable 1M	CFW500-CCHMIR01M	3.3 ft (1 m) Remote Keypad Cable	0.5	**$23**	V1G (V1)
HMI Cable 2M	CFW500-CCHMIR02M	6.6 ft (2 m) Remote Keypad Cable	0.7	**$31**	V1G (V1)
HMI Cable 3M	CFW500-CCHMIR03M	9.9 ft (3 m) Remote Keypad Cable	1.0	**$41**	V1G (V1)
HMI Cable 5M	CFW500-CCHMIR05M	16 ft (5 m) Remote Keypad Cable	1.2	**$51**	V1G (V1)
HMI Cable 7.5M	CFW500-CCHMIR075M	25 ft (7.5 m) Remote Keypad Cable	1.5	**$61**	V1G (V1)
HMI Cable 10M	CFW500-CCHMIR010M	33 ft (10 m) Remote Keypad Cable	2.0	**$72**	V1G (V1)
NEMA 1 Conduit Kit	CFW500-KN1A	NEMA 1 kit: Frame Size A	2.0	**$28**	V1G (V1)
NEMA 1 Conduit Kit	CFW500-KN1B	NEMA 1 kit: Frame Size B	3.0	**$33**	V1G (V1)
NEMA 1 Conduit Kit	CFW500-KN1C	NEMA 1 kit: Frame Size C	3.0	**$44**	V1G (V1)
NEMA 1 Conduit Kit	CFW500-KN1D	NEMA 1 kit: Frame Size D	3.0	**$59**	V1G (V1)
NEMA 1 Conduit Kit	CFW500-KN1E	NEMA 1 kit: Frame Size E	6.0	**$64**	V1G (V1)
NEMA 1 Conduit Kit	CFW500-KN1F	NEMA 1 kit: Frame Size F	12.0	**$165**	V1G (V1)
NEMA 1 Conduit Kit	CFW500-KN1G	NEMA 1 kit: Frame Size G	17.0	**$215**	V1G (V1)
Cable Shield Clamp Kit	CFW500-KPCSA	Cable Shield Clamp Kit for Frame A	1.0	**$41**	V1G (V1)
Cable Shield Clamp Kit	CFW500-KPCSB	Cable Shield Clamp Kit for Frame B	1.0	**$44**	V1G (V1)
Cable Shield Clamp Kit	CFW500-KPCSC	Cable Shield Clamp Kit for Frame C	1.1	**$46**	V1G (V1)
Cable Shield Clamp Kit	CFW500-KPCSD	Cable Shield Clamp Kit for Frame D	1.1	**$51**	V1G (V1)
Cable Shield Clamp Kit	CFW500-KPCSE	Cable Shield Clamp Kit for Frame E	6.0	**$64**	V1G (V1)
Cable Shield Clamp Kit	CFW500-KPCSF	Cable Shield Clamp Kit for Frame F	15.0	**$140**	V1G (V1)
Cable Shield Clamp Kit	CFW500-KPCSG	Cable Shield Clamp Kit for Frame G	18.0	**$180**	V1G (V1)
CFW500 Demo Suitcase	CFW500-DEMO-BLK	CFW500 Black Demo Suitcase with Remote Text keypad and STO Module	45.0	**$5,585**	V1G (V1)

Notes:
1) The "CFW500-IOS" module is included as standard with CFW500-IP20 and IP66 Drives.
2) The "CFW500-SFY2" Module can be installed in the CFW500-IP20 and IP66 drives in addition to the "CFW500-IOS" or any other I/O or communication module. The "CFW500-SFY2" module only works with 230V and 460 VAC, CFW500-G2 (GENERATION 2) drives. For CFW500-IP20, Frame-A to E VFDs, the NEMA 1 Kit top cover to protect the VFD from falling dust can not be used if the "CFW500-SFY2" is installed on the drive.
3) The "CFW500-HMIR" Remote Keypad (Non-Text) requires Qty. (1) CFW500-CCHIR0xM cable. ("x" represents the cable length in meters)
4) The "HMI-01" remote Keypad (Advanced Text) requires Qty. (1) CFW500-RHMIF and Qty. (1) CFW500-CCHIR0xM cable. ("x" represents the cable length in meters). This keypad only works with 230 VAC and 460 VAC, CFW500-G2 (GENERATION 2) drives.

Please refer to back cover for description of "NOTES"

For detailed specifications, data sheets, drawings and performance curves visit http://www.weg.net

CFW500

Option Card I/O Table

CFW500 Option Module	DI[1]	AI	AO	DOR	DOT	Infrared	Encoder	USB	RS232	RS485	CANopen / DeviceNet	Profibus-DP / DP V1	Modbus TCP	ProfiNet I/O	EtherNet I/P
CFW500-IOS [1]	4	1	1	1	1					1					
CFW500-IOD	8	1	1	1	4					1					
CFW500-IOAD	6	3	2	1	3					1					
CFW500-IOR / CFW500-IOR-B	5	1	1	4	1	1				1					
CFW500-ENC	5	1	1	3	1		1			1					
CFW500-CUSB	4	1	1	1	1			1		1					
CFW500-CRS232	4	1	1	1	1				1	1					
CFW500-CRS485-B	4	2	1	2	1					2					
CFW500-CCAN	2	1	1	1	1					1	1				
CFW500-CPDP	2	1	1	1	1					1		1			
CFW500-CPDP2	2	1	1	1	1					1		1			
CFW500-CEMB-TCP	2	1	1	1	1					1			1		
CFW500-CEPN-IO	2	1	1	1	1					1				1	
CFW500-CETH-IP	2	1	1	1	1					1					1
CFW500-CETH2	2	1			1					1			1		1

Notes:
1) The CFW500 VFD comes standard with "CFW500-IOS" Module. To use any of the above listed optional module, the CFW500-IOS module needs to be removed from the drive. In that case, the number of I/Os will depend on the I/O or communication module being used.

Technical Data

Power Rating	Power Supply	Tolerance: -15 to +10%
		Frequency: 50/60 Hz (48 Hz to 62 Hz)
		Phase imbalance: ≤ 3% of the rated phase-phase input voltage
		Transient voltages and overvoltages according to Category III (EN 61010/UL 508C)
		Maximum of 10 (line) connections per hour (1 every 6 minutes)
		Typical efficiency: ≥97%
Control	Method	V/f (scalar) Voltage Vector WEG (VVW) Vector without encoder (sensorless) and closed loop vector with encoder PM VVW: voltage vector control for permanent magnet motors
	Output Frequency	0 to 500 Hz, resolution of 0.015 Hz
Performance	V/f Control	Speed regulation: 1% of the rated speed (with slip compensation) Speed variation range: 1:20
	Vector Control (VVW)	Speed regulation: 1% of the rated speed Speed variation range: 1:30
	Sensorless	Speed regulation: 0.5% of the rated speed Speed variation range: 1:100
	Vector Control with Encoder	Speed regulation: 0.1% of the rated speed Speed variation range: 1:100
	PM VVW Control	Regulation: 0.1 % of the rated speed Speed variation range: 1:20
Environment Conditions	Temperature around the CFW500	14°F to 122°F (-10°C to 50°C): IP20 (sizes A to E) 14°F to 104°F (-10°C to 40°C): IP20 (sizes A to E) when installed side by side 14°F to 104°F (-10°C to 40°C): NEMA 1 (sizes A to E) 14°F to 104°F (-10°C to 40°C): IP20, NEMA 1 (size F) 14°F to 113°F (-10°C to 45°C): IP20, NEMA 1 (size G) 14°F to 104°F (-10°C to 40°C): IP66 (sizes A & B) For CFW500-IP20-Frame A to E & CFW500-IP66-Frame A & B, when operating temperatures are above the specification, it is necessary to apply 2% of current derating for each Celsius degree (ºC), limited to an increase of 10°C. For CFW500-IP20-Frame F & G, when operating temperatures are above the specification, it is necessary to apply 1% of current derating for each Celsius degree (°C) up to 50°C, and 2% up to 60°C (maximum).
	Aggressive Environments	Protection Class 3C2: Standard coating on the internal circuits, according to IEC 60721-3-3 (standard model)
		Protection Class 3C3: Extra coating - optional, according to IEC 60721-3-3 (optional)
	Air Relative Humidity	5% to 95% non-condensing
	Altitude	Up to 1,000 m (maximum altitude under normal conditions) 1,000 to 4,000 m: current derating of 1% for each 100 m above 1,000 m of altitude
	Pollution Degree	2 (EN 50178 and UL 508C), with non-conductive pollution Condensation must not cause conduction of the accumulated residues
Inputs[1]	Analog	One (1) isolated input: Levels (0 to 10) V or (0 to 20) mA or (4 to 20) mA Linearity error ≤ 0.25% Impedance: 100 kΩ for voltage input, 500 Ω for current input Programmable functions, including PTC input Maximum voltage accepted in the inputs: 30 VDC
	Digital	Four (4) isolated inputs Programmable functions: Active high (PNP): maximum low level of 15 VDC; minimum high level of 20 VDC Active low (NPN): maximum low level of 5 VDC; minimum high level of 9 VDC Maximum input voltage of 30 VDC Input current: 4.5 mA Maximum input current: 5.5 mA
Outputs[1]	Analog	One (1) isolated output. Levels (0 to 10) V or (0 to 20) mA or (4 to 20) mA Linearity error ≤ 0.25% Programmable functions RL ≥10 kΩ (0 to 10 V) or RL ≤ 500 Ω (0 to 20 mA / 4 to 20 mA)
	Relay	One (1) relay with NO/NC contact Maximum voltage: 240 VAC Maximum current of 0.5 A Programmable functions
	Transistor	One (1) isolated open sink digital output (using as reference the 24 VDC power supply) Maximum current of 150 mA (maximum capacity of the 24 VDC power supply)[2] Programmable functions
	Power Supply	24 VDC power supply. Maximum capacity: 150 mA[2] Power supply of 10 VDC Maximum capacity: 2 mA
Communication	Selectable Plug-In	Standard Communication: One (1) RS485 (Modbus RTU / BACnet) Port. Optional: CANopen, DeviceNet, Profibus-DP, EtherNet/IP, Modbus TCP, ProfiNet IO, USB, RS485 (two Ports) and RS232 port
Safety	Protection	Phase-phase overcurrent/short circuit in the output Phase-ground overcurrent/short circuit in the output Undervoltage/overvoltage in the power Overtemperature of the heatsink Motor overload Overload on the power module (IGBTs) External fault / alarm Programming error
Operating Interface (keypad)	Standard (Built in the CFW500)	Nine (9) keys: Run/Stop, Increment, Decrement, Direction of rotation, Jog, Local/Remote, Back/Esc and Enter/Menu LCD Display It allows accessing/changing all the parameters Accuracy of the indications: Current: 5% of the rated current Speed resolution: 0.1 Hz
Protection Degree	IP20	Sizes A, B, C, D, E, F and G
	NEMA 1	Sizes A, B, C, D, E, F and G with NEMA 1 kit
	IP66/NEMA 4X (Indoor/Outdoor)	Sizes A and B

Notes:
1) The number and/or types of analog/digital inputs/outputs may vary according to the plug-in module (accessory) used. In the table above, the standard plug-in module (CFW500-IOS) was taken into account. For further information, refer to the CFW500 user manual.
2) The maximum capacity of 150 mA considers the load of the 24 V power supply plus the transistor output, that is, the sum of the consumption of both must not exceed 150 mA.
Please refer to back cover for description of "NOTES"

For detailed specifications, data sheets, drawings and performance curves visit http://www.weg.net

CFW500

Technical Data

Standards	Safety Standards	UL 508C: Power conversion equipment
		UL 840: Insulation coordination including clearances and creepage distances for electrical equipment
		EN 61800-5-1: Safety requirements electrical, thermal and energy
		EN 50178: Electronic equipment for use in power installations
		EN 60204-1: Safety of machinery. Electrical equipment of machines. Part 1: general requirements Notes: In order to have a machine in accordance with this standard, the manufacturer of the machine is responsible for installing an emergency stop device and a device for disconnection from the power line.
		EN 60146 (IEC 146): Semiconductor converters
		EN 61800-2: Adjustable speed electrical power drive systems Part 2: general requirements – Rating specifications for low voltage adjustable frequency AC power drive systems.
	Electromagnetic Compatibility Standards	EN 61800-3: Adjustable speed electrical power drive systems Part 3: EMC product standard including specific test methods.
		EN 55011: Limits and methods of measurement of radio disturbance characteristics of industrial, scientific and medical (ISM) radio-frequency equipment
		CISPR 11: Industrial, scientific and medical (ISM) radio-frequency equipment Electromagnetic disturbance characteristics: Limits and methods of measurement
		EN 61000-4-2: Electromagnetic compatibility (EMC). Part 4: testing and measurement techniques. Section 2: electrostatic discharge immunity test.
		EN 61000-4-3: Electromagnetic compatibility – Part 4: testing and measurement techniques – Section 3: radiated, radio-frequency, electromagnetic field immunity test
		EN 61000-4-4: Electromagnetic compatibility – Part 4: testing and measurement techniques – Section 4: electrical fast transient/burst immunity test
		EN 61000-4-5: Electromagnetic compatibility – Part 4: testing and measurement techniques – Section 5: surge immunity test
		EN 61000-4-6: Electromagnetic compatibility – Part 4: testing and measurement techniques – Section 6: immunity to conducted disturbances, induced by radio-frequency fields
	Mechanical Construction Standards	EN 60529: Degrees of protection provided by enclosures (IP code)
		UL 50: Enclosures for electrical equipment
		IEC60721-3-3: Classification of environmental conditions – Part 3: classification of groups of environmental parameters and their severities – Section 3: stationary use at weather protected locations level 3M4.

Please refer to back cover for description of “NOTES”

For detailed specifications, data sheets, drawings and performance curves visit http:// www.weg.net

Data subject to change without notice.

CFW500-G2-IP20

Dynamic Braking Resistors – 100% Braking Torque at 20% Duty Cycle (12 Seconds Maximum Braking Time) – NEMA 1 Enclosure

Motor Voltage	Motor HP (ND)	CFW500 Catalog Number	Braking Resistor Catalog Number	Rated Ohms	Rated Watts	Dimensions (in) H x W x D[1]	List Price	Multiplier New (old)
230 VAC	2	CFW500B07P3B2DB20G2	CFDB2-63-448	63	500	5 x 12 x 7	$825	GA (V1)
	3	CFW500B10P0B2DB20G2	CFDB2-38-746	38	920	5 x 12 x 10	$1,025	GA (V1)
	5	CFW500B16P0T2DB20G2	CFDB2-26-1119	26	1,170	5 x 12 x 13	$1,225	GA (V1)
	7 1/2	CFW500C24P0T2DB20G2	CFDB2-19-1492	19	1,676	5 x 12 x 16	$1,430	GA (V1)
	10	CFW500D28P0T2DB20G2	CFDB2-13-2238	12.6	2,580	5 x 19 x 10	$1,775	GA (V1)
	10	CFW500D33P0T2DB20G2	CFDB2-10-2984	9.6	3,387	5 x 19 x 10	$1,775	GA (V1)
	15	CFW500D47P0T2DB20G2	CFDB2-10-2984	9.6	3,387	5 x 19 x 10	$1,775	GA (V1)
	25	CFW500E56P0T2DB20G2	CFDB2-7-4476	6.3	5,001	5 x 26.5 x 13	$2,780	GA (V1)
	25	CFW500F77P0T2DB20G2	CFDB2-8-3730	7.5	4,214	5 x 19 x 13	$2,150	GA (V1)
	30	CFW500F88P0T2DB20G2	CFDB2-8-3730	7.5	4,214	5 x 19 x 13	$2,150	GA (V1)
	40	CFW500F0105T2DB20G2	CFDB2-5-5968	4.9	6,590	5 x 26.5 x 16	$3,510	GA (V1)
	50	CFW500G0145T2DB20G2	CFDB2-3-11190	2.7	12,150	10 x 28 x 13	$6,010	GA (V1)
	60	CFW500G0180T2DB20G2	CFDB2-3-11190	2.7	12,150	10 x 28 x 13	$6,010	GA (V1)
	75	CFW500G0211T2DB20G2	CFDB2-3-11190	2.7	12,150	10 x 28 x 13	$6,010	GA (V1)
460 VAC	2	CFW500B02P6T4DB20G2	CFDB2-150-746	150	843	5 x 12 x 10	$1,025	GA (V1)
	3	CFW500B04P3T4DB20G2	CFDB2-150-746	150	843	5 x 12 x 10	$1,025	GA (V1)
	5	CFW500B06P5T4DB20G2	CFDB2-150-746	150	843	5 x 12 x 10	$1,025	GA (V1)
	7 1/2	CFW500B10P0T4DB20G2	CFDB2-75-1492	75	1,815	5 x 12 x 16	$1,430	GA (V1)
	10	CFW500C14P0T4DB20G2	CFDB2-50-2238	50	2,560	5 x 19 x 13	$1,965	GA (V1)
	10	CFW500C16P0T4DB20G2	CFDB2-50-2238	50	2,560	5 x 19 x 13	$1,965	GA (V1)
	15	CFW500D24P0T4DB20G2	CFDB2-25-4476	25	5,120	5 x 26.5 x 13	$2,700	GA (V1)
	20	CFW500D31P0T4DB20G2	CFDB2-19-5968	19	6,703	5 x 26.5 x 16	$3,155	GA (V1)
	25/30	CFW500E39P0T4DB20G2	CFDB2-10-11190	10	12,800	10 x 28 x 16	$6,050	GA (V1)
	40	CFW500E49P0T4DB20G2	CFDB2-10-11190	10	12,800	10 x 28 x 16	$6,050	GA (V1)
	50/60	CFW500F77P0T4DB20G2	CFDB2-15-8952	15	10,002	10 x 28 x 13	$4,635	GA (V1)
	60/75	CFW500F88P0T4DB20G2	CFDB2-15-8952	15	10,002	10 x 28 x 13	$4,635	GA (V1)
	75	CFW500F0105T4DB20G2	CFDB2-10-11190	10	12,800	10 x 28 x 16	$6,050	GA (V1)
	100/125	CFW500G0142T4DB20G2	CFDB2-5-22380	5	25,600	24 x 30 x 18	$12,655	GA (V1)
	150	CFW500G0180T4DB20G2	CFDB2-5-22380	5	25,600	24 x 30 x 18	$12,655	GA (V1)
	175	CFW500G0211T4DB20G2	CFDB2-5-22380	5	25,600	24 x 30 x 18	$12,655	GA (V1)

Notes:
1) Dimensions are provided for estimating purposes only.

CFW500

CFW500-G2-IP20

Dynamic Braking Resistors – 100% Braking Torque at 50% Duty Cycle (30 Seconds Maximum Braking Time) – NEMA 1 Enclosure

Motor Voltage	Motor HP (ND)	CFW500 Catalog Number	Braking Resistor Catalog Number	Rated Ohms	Rated Watts	Dimensions (in) H x W x D[1]	List Price	Multiplier New (old)
230 VAC	2	CFW500B07P3B2DB20G2	CFDB5-63-1119	63	1,250	5 x 12 x 10	$1,225	GA (V1)
	3	CFW500B10P0B2DB20G2	CFDB5-38-1865	38	2,299	5 x 19 x 13	$1,965	GA (V1)
	5	CFW500B16P0T2DB20G2	CFDB5-26-2798	26	2,925	5 x 26.5 x 13	$2,700	GA (V1)
	7 1/2	CFW500C24P0T2DB20G2	CFDB5-19-3730	19	4,190	5 x 26.5 x 13	$2,700	GA (V1)
	10	CFW500D28P0T2DB20G2	CFDB5-13-5595	12.6	6,451	5 x 26.5 x 16	$3,155	GA (V1)
	10	CFW500D33P0T2DB20G2	CFDB5-10-7460	9.6	8,467	10 x 28 x 13	$4,990	GA (V1)
	15	CFW500D47P0T2DB20G2	CFDB5-10-7460	9.6	8,467	10 x 28 x 13	$4,990	GA (V1)
	25	CFW500E56P0T2DB20G2	CFDB5-7-11190	6.3	12,502	10 x 28 x 16	$5,620	GA (V1)
	25	CFW500F77P0T2DB20G2	CFDB5-8-9325	7.5	10,534	10 x 28 x 13	$4,990	GA (V1)
	30	CFW500F88P0T2DB20G2	CFDB5-8-9325	7.5	10,534	10 x 28 x 13	$4,990	GA (V1)
	40	CFW500F0105T2DB20G2	CFDB5-4-18650	3.9	19,500	24 x 30 x 18	$11,025	GA (V1)
	50	CFW500G0145T2DB20G2	CFDB5-3-27975	2.7	30,375	32 x 30 x 18	$16,420	GA (V1)
	60	CFW500G0180T2DB20G2	CFDB5-3-27975	2.7	30,375	32 x 30 x 18	$16,420	GA (V1)
	75	CFW500G0211T2DB20G2	CFDB5-3-27975	2.7	30,375	32 x 30 x 18	$16,420	GA (V1)
460 VAC	2	CFW500B02P6T4DB20G2	CFDB5-150-1865	150	2,107	5 x 19 x 13	$1,840	GA (V1)
	3	CFW500B04P3T4DB20G2	CFDB5-150-1865	150	2,107	5 x 19 x 13	$1,840	GA (V1)
	5	CFW500B06P5T4DB20G2	CFDB5-150-1865	150	2,107	5 x 19 x 13	$1,840	GA (V1)
	7 1/2	CFW500B10P0T4DB20G2	CFDB5-75-3730	75	4,538	5 x 26.5 x 16	$3,155	GA (V1)
	10	CFW500C14P0T4DB20G2	CFDB5-38-7460	38	8,379	10 x 28 x 13	$4,555	GA (V1)
	10	CFW500C16P0T4DB20G2	CFDB5-38-7460	38	8,379	10 x 28 x 13	$4,555	GA (V1)
	15	CFW500D24P0T4DB20G2	CFDB5-30-9325	30	10,935	10 x 28 x 16	$5,050	GA (V1)
	20	CFW500D31P0T4DB20G2	CFDB5-25-11190	25	12,800	10 x 28 x 16	$5,425	GA (V1)
	25/30	CFW500E39P0T4DB20G2	CFDB5-10-27975	10	32,000	32 x 30 x 18	$15,605	GA (V1)
	40	CFW500E49P0T4DB20G2	CFDB5-10-27975	10	32,000	32 x 30 x 18	$15,605	GA (V1)
	50/60	CFW500F77P0T4DB20G2	CFDB5-15-22380	15	25,005	24 x 30 x 18	$10,865	GA (V1)
	60/75	CFW500F88P0T4DB20G2	CFDB5-15-22380	15	25,005	24 x 30 x 18	$10,865	GA (V1)
	75	CFW500F0105T4DB20G2	CFDB5-8-46625	8	50,700	32 x 30 x 18	$20,600	GA (V1)
	100/125	CFW500G0142T4DB20G2	CFDB5-5-74600	5	83,790	72 x 30 x 18	$33,780	GA (V1)
	150	CFW500G0180T4DB20G2	CFDB5-5-74600	5	83,790	72 x 30 x 18	$33,780	GA (V1)
	175	CFW500G0211T4DB20G2	CFDB5-5-74600	5	83,790	72 x 30 x 18	$33,780	GA (V1)

Notes:
1) Dimensions are provided for estimating purposes only.

CFW500-G2-N4X (IP66)

Dynamic Braking Resistors – 100% Braking Torque at 20% Duty Cycle (12 Seconds Maximum Braking Time) – NEMA 1 Enclosure

Motor Voltage	Motor HP (ND)	CFW500 Catalog Number	Braking Resistor Catalog Number	Rated Ohms	Rated Watts	Dimensions (in) H x W x D [1]	List Price	Multiplier New (old)
230 VAC	1/3	CFW500A01P6B2DB66(DS)G2	CFDB2-190-149	190	167	5 x 12 x 5	$525	GA (V1)
	3/4	CFW500A02P6B2DB66(DS)G2	CFDB2-190-149	190	167	5 x 12 x 5	$525	GA (V1)
	1 1/2	CFW500A04P3B2DB66(DS)G2	CFDB2-190-149	190	167	5 x 12 x 5	$525	GA (V1)
	2	CFW500A07P3B2DB66(DS)G2	CFDB2-63-448	63	500	5 x 12 x 7	$825	GA (V1)
	3	CFW500A10P0B2DB66(DS)G2	CFDB2-38-746	38	920	5 x 12 x 10	$1,025	GA (V1)
	5	CFW500A16P0T2DB66(DS)G2	CFDB2-26-1119	26	1,170	5 x 12 x 13	$1,225	GA (V1)
	7 1/2	CFW500B24P0T2DB66(DS)G2	CFDB2-19-1492	19	1,676	5 x 12 x 16	$1,430	GA (V1)
	10	CFW500B28P0T2DB66(DS)G2	CFDB2-13-2238	12.6	2,580	5 x 19 x 10	$1,775	GA (V1)
	10	CFW500B33P0T2DB66(DS)G2	CFDB2-10-2984	9.6	3,387	5 x 19 x 10	$1,775	GA (V1)
	15	CFW500C47P0T2DB66(DS)G2	CFDB2-10-2984	9.6	3387	5 x 19 x 10	$1,775	GA (V1)
	25	CFW500C56P0T2DB66(DS)G2	CFDB2-7-4476	6.3	5000	5 x 26.5 x 13	$2,780	GA (V1)
460 VAC	1/2	CFW500A01P0T4DB66(DS)G2	CFDB2-150-746	150	843	5 x 12 x 10	$1,025	GA (V1)
	1	CFW500A01P6T4DB66(DS)G2	CFDB2-150-746	150	843	5 x 12 x 10	$1,025	GA (V1)
	2	CFW500A02P6T4DB66(DS)G2	CFDB2-150-746	150	843	5 x 12 x 10	$1,025	GA (V1)
	3	CFW500A04P3T4DB66(DS)G2	CFDB2-150-746	150	843	5 x 12 x 10	$1,025	GA (V1)
	5	CFW 500A06P5T4DB66(DS)G2	CFDB2-150-746	150	843	5 x 12 x 10	$1,025	GA (V1)
	7 1/2	CFW500A10P0T4DB66(DS)G2	CFDB2-75-1492	75	1,815	5 x 12 x 16	$1,430	GA (V1)
	10	CFW500B14P0T4DB66(DS)G2	CFDB2-50-2238	50	2,560	5 x 19 x 13	$1,965	GA (V1)
	10	CFW500B16P0T4DB66(DS)G2	CFDB2-50-2238	50	2,560	5 x 19 x 13	$1,965	GA (V1)
	15	CFW500B24P0T4DB66(DS)G2	CFDB2-25-4476	25	5,120	5 x 26.5 x 13	$2,700	GA (V1)
	25	CFW500B31P0T4DB66(DS)G2	CFDB2-19-5968	19	6,703	5 x 26.5 x 16	$3,155	GA (V1)
	30	CFW500C39P0T4DB66(DS)G2	CFDB2-10-11190	10	12,800	10 x 28 x 16	$6,050	GA (V1)
	50	CFW500C49P0T4DB66(DS)G2	CFDB2-10-11190	10	12,800	10 x 28 x 16	$6,050	GA (V1)

Notes:
1) Dimensions are provided for estimating purposes only.

CFW900 – System Drive

The CFW900 is a high-tech VFD for driving and controlling three-phase induction and permanent magnet motors. It offers excellent static and dynamic performance and highly precise torque, speed, and position control. It can be used in a wide range of applications due to its high overload capacity. Thanks to its technology, the CFW900 variable speed drive provides energy savings, safety, increased productivity, and quality in the process network in which it is implemented. It allows quick and easy access to the application information and configuration settings. Using a menu structure, the new interface of the CFW900 line offers an unprecedented user interactive experience, providing settings and configurations with a detailed description of the parameters right on the HMI, in addition to event logs with date and time and a setup wizard.

Standard Features

- IP20 Enclosure Protection class. (UL Type 1 with optional kit).
- Dual DC link inductors enable compliance with IEC 61000-3-2 & 61000-3-12 requirements regarding harmonics, (no need for external line reactance.)
- Normal duty and heavy-duty ratings to adapt to all kinds of loads.
- Conformal coated circuit board as per Class 3C2 in compliance with IEC 60721-3-3.
- Control Mode: Scalar, VVW (Voltage Vector WEG), Vector Control (Sensorless and closed loop with encoder feedback), VVW PM (suitable for fan, Pump, and compressor).
- Smart Thermal management allowing automatic adjustment of the switching frequency to keep the motor running in adverse conditions of high temperature.
- IoT - Ready VFD with MQTT protocol allows direct integration with WEG MFM.
- Specific PWM Modulation function eliminates the need of an output filter up to 200m motor cable length.
- 4 independent slots with the possibility of expansion to 7 slots to accommodate optional modules. (Any module can be mounted in any slot in any quantity, except the communication module which is limited to one per drive.)
- Detachable Modern Text/Graphic Keypad with USB port, built-in Bluetooth (Bluetooth allows easy programming & and monitoring of CFW900 using Cell phone app “WEG WPS”), Real-time clock with event log, copy function, Oriented start-up, and online help.
- Built-in as a standard:
  - RFI filter meeting the requirements of electromagnetic compatibility directive “EMC Directive 2004/108/EC”.
  - advanced SoftPLC (PLC functionality).
  - 24Vdc power supply (max. 800mA); can also accept external 24Vdc power to keep control & communication circuits active.
  - RS-485 (Modbus RTU) port
  - Dual Ethernet ports (Ethernet/IP or Modbus TCP)
  - STO (Safe Torque Off) and SS1 (Safe Stop, time controlled) safety functions meet SIL3 & Ple / Category 4 requirements, eliminating need of Safety relay/safety contactors.

Applications

- Pumps
- Fans/Blowers
- Conveyors
- Crushers
- Compressors
- Agitators and Mixers
- Extruders
- Grizzly Feeders
- Centrifuges
- Cranes and Hoists
- Rollout Tables
- Presses
- Saws

Please refer to back cover for description of “NOTES”

CFW900 CATALOG NUMBER SEQUENCE

CFW900	A	02P8	T	4	DB	20	Y2	B

Frame

A,B,C,D,E

ND O/P Current

02P8 = 2.8 Amps
03P6 = 3.6 Amps
04P6 = 4.6 Amps
06P0 = 6.0 Amps
07P5 = 7.5 Amps
19P0 = 19 Amps
26P0 = 26 Amps
…
…
0110 = 110 Amps
0150 = 150 Amps
0203 = 203 Amps
0242 = 242 Amps
0250 = 250 Amps

Options

DB = With Internal DB
NB = No Internal DB

20 = IP20 Encl.
21 = IP21 Encl.
N1 = UL Type 1 Encl.

Y2 = With STO & SS1

B = With Bluetooth HMI

Supply Voltage

2 = 200-240 Vac
4 = 380-480 Vac
5 = 500-600 Vac

Supply Phases

B = 1 or 3 Phase
T = 3 Phase

CFW900

Drive Ratings

Normal Duty (ND) Cycle:

- 110% for 60 seconds every 5 minutes.
- 150% for 3 seconds every 5 minutes.

Heavy Duty (HD) Cycle:

- 150% for 60 seconds every 5 minutes.
- 200% for 3 seconds every 5 minutes.

Sizing the drive:

The correct way to select a VFD is to match its output current with the motor-rated current. However, the tables in this catalog also present the expected motor horsepower for each VFD model as per WEG W22, 4-pole NEMA Premium Motor ratings. Use these horsepower ratings only as a guide.

A - surface mount brackets
B - heatsink/back of inverter
C - fan with mounting bracket
D - XC1 connector (CFW900-IOS)
E - CFW900-4SLOTS backplane
F - CFW900-REL accessory board module
G - front cover
H - HMI

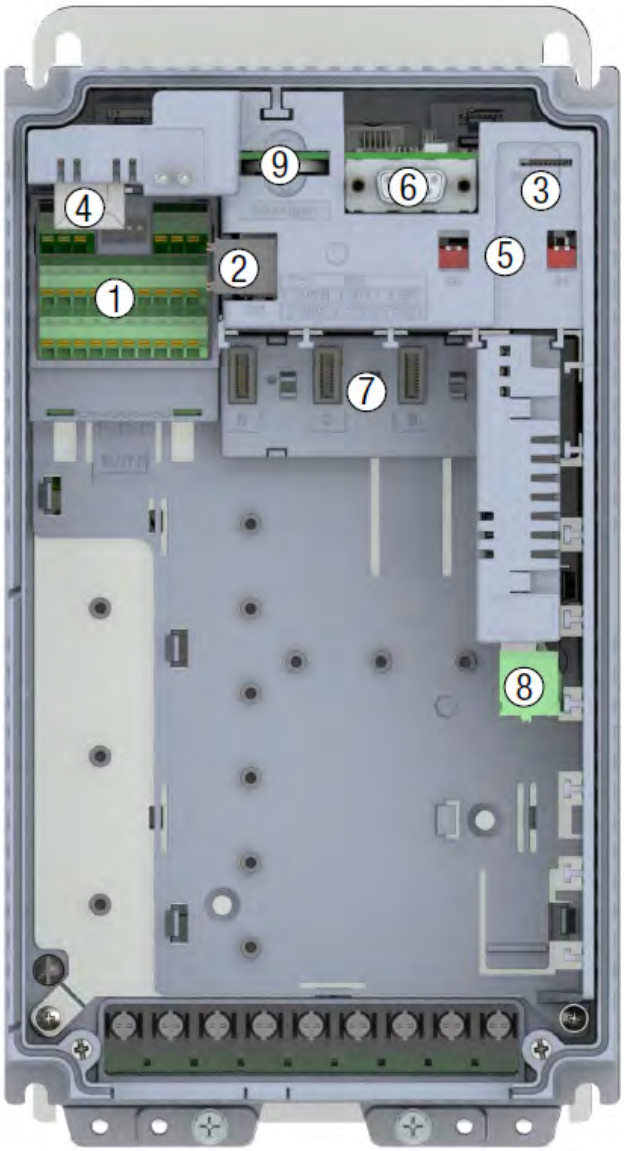

Item	Description
1	XC1 Connector (CFW900-IOS): digital and analog inputs and outputs, input for external power supply and RS-485 communication
2	XC2 Connector (safety module): STO and SS1-t functions
3	XC3 connector (microSD card slot): allows copying parameters and storing SoftPLC programs (see the programming manual); micro SD Card is not supplied with CFW900, available as an optional accessory.
4	XC4A and XC4B connectors: dual port ethernet connection (RJ45) (see the ethernet communication manual)
5	DIP switches S1 and S2: safety module configuration
6	XC6 connector: DB9 connector for connecting the HMI/remote HMI
7	"Backplane CFW900-4SLOTS: provides four slots to connect accessories. By default, slot A is taken by the CFW900-REL-01. It can be replaced by the CFW900-7SLOTS, which has seven slots for accessories."
8	XC30 (CFW900-REL-01): Relay output
9	CR2032 battery for real time clock. Use non-conductive pliers or tweezers to remove/replace the battery

CFW900-IP20
Enclosure

CFW900 with UL
Type 1 kit

CFW900 with IP21 kit

Please refer to back cover for description of "NOTES"

For detailed specifications, data sheets, drawings and performance curves visit http://www.weg.net

CFW900

CFW900 - IP20 - 230VAC

Motor Voltage	ND / VT [1]		HD / CT [1]		Catalog Number	Braking Transistor	Frame Size [4]	Dimensions (in.) HxWxD	Approx. Weight (lbs.)	List Price	Multiplier Symbol
	Motor HP [2]	Drive Amps [3]	Motor HP [2]	Drive Amps [3]							
230 Vac / 3 Phase	**Input Power Supply: Single or Three-Phase 200-240 Vac with Dynamic Braking Transistor**										
	1 1/2	4.6	1 1/2	4.6	CFW900A04P6B2DB20Y2B	Yes	A	10.6 x 5.7 x 8.7	9.9	$1,570	V1P
	2	6	2	6	CFW900A06P0B2DB20Y2B	Yes	A	10.6 x 5.7 x 8.7	9.9	$1,644	V1P
	2	7.5	2	7.5	CFW900A07P5B2DB20Y2B	Yes	A	10.6 x 5.7 x 8.7	9.9	$1,716	V1P
	3	10	3	10	CFW900A10P0B2DB20Y2B	Yes	A	10.6 x 5.7 x 8.7	9.9	$1,812	V1P
	Input Power Supply: Three-Phase 200-240 Vac with Dynamic Braking Transistor										
	1 1/2	4.6	1 1/2	4.6	CFW900A04P6T2DB20Y2B	Yes	A	10.6 x 5.7 x 8.7	9.9	$1,498	V1P
	2	6	1 1/2	5	CFW900A06P0T2DB20Y2B	Yes	A	10.6 x 5.7 x 8.7	9.9	$1,538	V1P
	2	7.5	2	6.8	CFW900A07P5T2DB20Y2B	Yes	A	10.6 x 5.7 x 8.7	9.9	$1,620	V1P
	3	10.6	3	9.6	CFW900A10P6T2DB20Y2B	Yes	A	10.6 x 5.7 x 8.7	9.9	$1,692	V1P
	5	13	3	11	CFW900A13P0T2DB20Y2B	Yes	A	10.6 x 5.7 x 8.7	9.9	$1,728	V1P
	7 1/2	19	5	16	CFW900A19P0T2DB20Y2B	Yes	A	10.6 x 5.7 x 8.7	9.9	$1,850	V1P
	10	26	7 1/2	22	CFW900B26P0T2DB20Y2B	Yes	B	15.2 x 6.5 x 9	22.0	$2,424	V1P
	10	34	10	28	CFW900B34P0T2DB20Y2B	Yes	B	15.2 x 6.5 x 9	22.0	$2,641	V1P
	15	45	10	35	CFW900B45P0T2DB20Y2B	Yes	B	15.2 x 6.5 x 9	22.0	$3,641	V1P
	20	56	15	47	CFW900C56P0T2DB20Y2B	Yes	C	18.1 x 7.9 x 11.6	45.2	$4,400	V1P
	25	70	20/25	59	CFW900C70P0T2DB20Y2B	Yes	C	18.1 x 7.9 x 11.6	45.2	$5,700	V1P
	30	80	25	70	CFW900C80P0T2DB20Y2B	Yes	C	18.1 x 7.9 x 11.6	45.2	$7,100	V1P
	40	110	30	92	CFW900D0110T2DB20Y2B	Yes	D	24.6 x 9.8 x 11.6	73.8	$9,000	V1P
	50	135	40	110	CFW900D0135T2DB20Y2B	Yes	D	24.6 x 9.8 x 11.6	73.8	$12,037	V1P
	60	150	50	124	CFW900D0150T2DB20Y2B	Yes	D	24.6 x 9.8 x 11.6	73.8	$13,295	V1P
	75	172	60	150	CFW900E0172T2DB20Y2B	Yes	E	26.6 x 13.2 x 14.1	140.0	$14,553	V1P
	75	195	60	160	CFW900E0195T2DB20Y2B	Yes	E	26.6 x 13.2 x 14.1	140.0	$17,922	V1P
	100	250	75	211	CFW900E0250T2DB20Y2B	Yes	E	26.6 x 13.2 x 14.1	140.0	$20,866	V1P
	Input Power Supply: Three-Phase 200-240 Vac without Dynamic Braking Transistor										
	40	110	30	92	CFW900D0110T2NB20Y2B	No	D	24.6 x 9.8 x 11.6	73.8	$8,550	V1P
	50	135	40	110	CFW900D0135T2NB20Y2B	No	D	24.6 x 9.8 x 11.6	73.8	$11,250	V1P
	60	150	50	124	CFW900D0150T2NB20Y2B	No	D	24.6 x 9.8 x 11.6	73.8	$12,425	V1P
	75	172	60	150	CFW900E0172T2NB20Y2B	No	E	26.6 x 13.2 x 14.1	140.0	$13,600	V1P
	75	195	60	160	CFW900E0195T2NB20Y2B	No	E	26.6 x 13.2 x 14.1	140.0	$16,750	V1P
	100	250	75	211	CFW900E0250T2NB20Y2B	No	E	26.6 x 13.2 x 14.1	140.0	$19,500	V1P

Notes:
1. ND/ VT = Normal Duty / Variable Torque (Quadratic Load), 110% overload / 60 sec OR 150% overload / 3 sec, every 5 minutes.
HD/ CT = Heavy Duty / Constant Torque, 150% overload / 60 sec OR 200% overload / 3 sec, every 5 minutes.
2. "HP" rating based on WEG 4-Pole W22 motors' "average FLA values." Use as a guide only.
3. Motor FLA may vary with speed and manufacturer. ALWAYS compare motor FLA to Nominal AMPS of the drive.
4. Frame A to D: Maximum 122°F (50°C) ambient temperature (w/o derating) with factory default settings for Intelligent Thermal Management (Active) and switching frequency (4 kHz).
Frame E: Maximum 113°F (45°C) ambient temperature (w/o derating) with factory default settings for Intelligent Thermal Management (Active) and switching frequency (2 kHz).

Please refer to back cover for description of "NOTES"

Data subject to change without notice.

CFW900 - IP20 - 460VAC

Motor Voltage	ND / VT [1]		HD / CT [1]		Catalog Number	Braking Transistor	Frame Size [4]	Dimensions (in.) HxWxD	Approx. Weight (lbs.)	List Price	Multiplier Symbol
	Motor HP [2]	Drive Amps [3]	Motor HP [2]	Drive Amps [3]							
460 Vac / 3 Phase	**Input Power Supply: Three-Phase 380-480 Vac with Dynamic Braking Transistor**										
	2	2.8	1 1/2	2.4	CFW900A02P8T4DB20Y2B	Yes	A	10.6 x 5.7 x 8.7	9.9	**$1,580**	V1P
	2	3.6	2	2.8	CFW900A03P6T4DB20Y2B	Yes	A	10.6 x 5.7 x 8.7	9.9	**$1,616**	V1P
	3	4.8	2	3.9	CFW900A04P8T4DB20Y2B	Yes	A	10.6 x 5.7 x 8.7	9.9	**$1,650**	V1P
	5	6.5	3	5.3	CFW900A06P5T4DB20Y2B	Yes	A	10.6 x 5.7 x 8.7	9.9	**$1,712**	V1P
	7 1/2	9.6	5	8	CFW900A09P6T4DB20Y2B	Yes	A	10.6 x 5.7 x 8.7	9.9	**$1,969**	V1P
	10	14	7 1/2	12	CFW900A14P0T4DB20Y2B	Yes	A	10.6 x 5.7 x 8.7	9.9	**$2,068**	V1P
	10	17	10	17	CFW900A17P0T4DB20Y2B	Yes	A	10.6 x 5.7 x 8.7	9.9	**$2,500**	V1P
	15/20	26	15	21	CFW900B26P0T4DB20Y2B	Yes	B	15.2 x 6.5 x 9	22.0	**$3,085**	V1P
	25	33	20	28	CFW900B33P0T4DB20Y2B	Yes	B	15.2 x 6.5 x 9	22.0	**$3,873**	V1P
	30	39	25	33	CFW900B39P0T4DB20Y2B	Yes	B	15.2 x 6.5 x 9	22.0	**$4,300**	V1P
	40	50	30	40	CFW900C50P0T4DB20Y2B	Yes	C	18.1 x 7.9 x 11.6	45.2	**$5,400**	V1P
	50	62	40	50	CFW900C62P0T4DB20Y2B	Yes	C	18.1 x 7.9 x 11.6	45.2	**$6,633**	V1P
	60	74	50	62	CFW900C74P0T4DB20Y2B	Yes	C	18.1 x 7.9 x 11.6	45.2	**$7,500**	V1P
	75	96	60	75	CFW900D96P0T4DB20Y2B	Yes	D	24.6 x 9.8 x 11.6	73.8	**$10,372**	V1P
	100	124	75	103	CFW900D0124T4DB20Y2B	Yes	D	24.6 x 9.8 x 11.6	73.8	**$11,876**	V1P
	125	146	100	124	CFW900D0146T4DB20Y2B	Yes	D	24.6 x 9.8 x 11.6	73.8	**$13,374**	V1P
	150	172	125	146	CFW900E0172T4DB20Y2B	Yes	E	26.6 x 13.2 x 14.1	140.0	**$16,049**	V1P
	175	203	125	161	CFW900E0203T4DB20Y2B	Yes	E	26.6 x 13.2 x 14.1	140.0	**$18,725**	V1P
	200	242	150	190	CFW900E0242T4DB20Y2B	Yes	E	26.6 x 13.2 x 14.1	140.0	**$22,470**	V1P
	Input Power Supply: Three-Phase 380-480 Vac without Dynamic Braking Transistor										
	75	96	60	75	CFW900D96P0T4NB20Y2B	No	D	24.6 x 9.8 x 11.6	73.8	**$9,695**	V1P
	100	124	75	103	CFW900D0124T4NB20Y2B	No	D	24.6 x 9.8 x 11.6	73.8	**$11,100**	V1P
	125	146	100	124	CFW900D0146T4NB20Y2B	No	D	24.6 x 9.8 x 11.6	73.8	**$12,500**	V1P
	150	172	125	146	CFW900E0172T4NB20Y2B	No	E	26.6 x 13.2 x 14.1	140.0	**$15,000**	V1P
	175	203	125	161	CFW900E0203T4NB20Y2B	No	E	26.6 x 13.2 x 14.1	140.0	**$17,500**	V1P
	200	242	150	190	CFW900E0242T4NB20Y2B	No	E	26.6 x 13.2 x 14.1	140.0	**$21,000**	V1P

Notes:
1. ND/ VT = Normal Duty / Variable Torque (Quadratic Load), 110% overload / 60 sec OR 150% overload / 3 sec, every 5 minutes.
HD/ CT = Heavy Duty / Constant Torque, 150% overload / 60 sec OR 200% overload / 3 sec, every 5 minutes.
2. "HP" rating based on WEG 4-Pole W22 motors' "average FLA values." Use as a guide only.
3. Motor FLA may vary with speed and manufacturer. ALWAYS compare motor FLA to Nominal AMPS of the drive.
4. Frame A to D: Maximum 122°F (50°C) ambient temperature (w/o derating) with factory default settings for Intelligent Thermal Management (Active) and switching frequency (4 kHz).
Frame E: Maximum 113°F (45°C) ambient temperature (w/o derating) with factory default settings for Intelligent Thermal Management (Active) and switching frequency (2 kHz).

Options and Accessories

TYPE	CATALOG NUMBER	DESCRIPTION	Apprx. Shpg. Wt. (lbs.)	List Price	Multiplier Symbol
CFW900 I/O Expansion Modules [1]	CFW900-IOAI-01	3 Isolated Analog Inputs: Impedance: > 400 Kohm (Voltage), 250 Ohm (Current) AI1: Voltage 0 to 10v, 12 bits; Current 0/4 to 20 mA, 11 bits AI2 & AI3: Voltage -10/0 to 10v, 11 bits + signal; Current - 0/4 to 20 mA, 10 bits 2 Isolated Analog Outputs: RL ≥ 1 Kohm (Voltage) or RL ≤ 600 ohm (Current) AO1 & AO2: Voltage 0 to 10v, 12 bits; Current - 0/4 to 20 mA, 12 bits	0.5	**$605**	V1P
	CFW900-IOD-01	8 configurable (NPN or PNP) isolated inputs, Max. Voltage: 30 Vdc. 8 configurable isolated digital outputs with solid-state relay: 30 Vdc.	0.5	**$455**	V1P
	CFW900-REL-01	3 Relay outputs (one module supplied as a standard with CFW900 Drive) Relay Output# 1: Form C (NO & NC contacts) Relay Output # 2 & 3: Form A (NO contact) Maximum voltage: 30 Vdc, 250 Vac, OVC III Maximum current: 2 A	0.5	**$200**	V1P
Temperature Transducers Modules [1]	CFW900-TEMP-01	Six (6) isolated inputs for PTC / PT100 or PT1000 Sensors (2-wire or 3-wire connections). All sensors must be of same type.	0.5	**$390**	V1P
Encoder Modules [1]	CFW900-ENC-01	Incremental encoder with a signal up to 310 kHz and repeater	0.5	**$435**	V1P
Communication Modules [2]	CFW900-CCAN-W	CAN interface module (CANopen / DeviceNet)	0.5	**$275**	V1P
	CFW900-CPDP-N	Profibus DP-V1 interface module	0.5	**$1,460**	V1P
	CFW900-CPN-IRT-N	Profinet IRT interface module - 2 Ports	0.5	**$2,810**	V1P
	CFW900-CECAT-N	EtherCAT interface module - 2 Ports	0.5	**$2,065**	V1P
Backplane - Slot for Accessories	CFW900-4SLOTS	Backplane with 4 Slots (supplied as a standard with CFW900 Drive)	0.5	**$200**	V1P
	CFW900-7SLOTS	Backplane with 7 Slots	0.5	**$250**	V1P
Keypad Accessories	CFW900-HMI-BLT	CFW900 standard keypad with Bluetooth	0.2	**$390**	V1P
	CFW900-RHMIF	CFW900 Remote keypad frame kit, UL Type 12	0.5	**$70**	V1P
Remote Keypad Cables	CFW900-CCHMIR01M	1m (3.3ft) Remote Keypad Cable	0.7	**$55**	V1P
	CFW900-CCHMIR02M	2m (6.6ft) Remote Keypad Cable	1.5	**$60**	V1P
	CFW900-CCHMIR03M	3m (10ft) Remote Keypad Cable	2	**$70**	V1P
	CFW900-CCHMIR05M	5m (16ft) Remote Keypad Cable	2.6	**$80**	V1P
	CFW900-CCHMIR07M	7.5m (25ft) Remote Keypad Cable	3.3	**$95**	V1P
	CFW900-CCHMIR10M	10m (33ft) Remote Keypad Cable	4.0	**$105**	V1P
UL Type 1 (NEMA1) Kits	CFW900-KN1A	UL Type 1 (NEMA1) - Conduit kit for CFW900 frame size A	22.0	**$85**	V1P
	CFW900-KN1B	UL Type 1 (NEMA1) - Conduit kit for CFW900 frame size B	16.0	**$105**	V1P
	CFW900-KN1C [3]	UL Type 1 (NEMA1) - Conduit kit for CFW900 frame size C	18.0	**$120**	V1P
	CFW900-KN1D [3]	UL Type 1 (NEMA1) - Conduit kit for CFW900 frame size D	28.0	**$170**	V1P
	CFW900-KN1E [3]	UL Type 1 (NEMA1) - Conduit kit for CFW900 frame size E	28.0	**$220**	V1P
IP21 kits	CFW900-IP21A	IP21 - Kit for CFW900 frame size A (top cover)	8.5	**$100**	V1P
	CFW900-IP21B	IP21 - Kit for CFW900 frame size B (top cover)	8.5	**$105**	V1P
	CFW900-IP21C	IP21 - Kit for CFW900 frame size C (top cover)	8.5	**$110**	V1P
	CFW900-IP21D	IP21 - Kit for CFW900 frame size D (top cover)	8.8	**$125**	V1P
	CFW900-IP21E	IP21 - Kit for CFW900 frame size E (top cover)	10.7	**$140**	V1P
microSD Card	SDC-8GB [4]	8GB industrial temperature microSD card	0.5	**$290**	V1P
Demo Suitcase	CFW900-DEMO-ENC-BLK	CFW900 Demo Suitcase (black color) with Encoder	48.0	**$11,390**	V1P

Notes:
1. These accessories can be installed in any available slot of the Drive. Up to 7 accessories of the same type can be used.
2. It is only possible to use one communication module per inverter.
3. UL Listing is in progress. The Items will be available in 2nd Q of 2025.
4. Not UL listed.

Please refer to back cover for description of "NOTES"

For detailed specifications, data sheets, drawings and performance curves visit http:// www.weg.net

Data subject to change without notice.

Technical Data

Input AC Power Supply	Voltage	Single Phase or Three Phase	Frame-A, B & C: 200-240 Vac (+10%, -15%)
			Frame-D & E: 208-240 Vac (+10%, -15%) 208-220V ac (+10%, -10%)
		Three phase	380-480 Vac (+10%, -15%)
	Frequency	50 / 60 Hz (Range: 48… 63Hz)	
	Phase Unbalance	≤ 3% between line voltages	
	Overvoltages / transients	Category III (EN 61010 / IEC61800-5-1 / UL61800-5-1)	
	Drive Power factor for rated condition - ND	For Single Phase or Three Phase, 200VAc drives (B2)	Single Phase: 0.70
			Three Phase: 0.77
		For three Phase (T2 or T4)	0.93
	Inverter displacement factor (cos phi)	≥ 0.98	
	Harmonic distortion of the input current (THDi)	≤ 42% for 75 to 100% of Drive nominal output current (ND) for balanced power supply	
Drive Output	Output Frequency	0 to 500 Hz for Frame A…D [1]	
		0 to 250 Hz for Frame E [1]	
	Switching Frequency	Rated [2]	Frames A to D : 4 kHz
			Frame E : 2kHz
		Adjustment range [3, 4]	Frames A to D : 1.5 to 16 kHz
			Frame E : 1 to 8 kHz
	Maximum motor Cable length	No need to use output filter: 200 m (over 100m, it is necessary to use PWM modulation for long cables) [5]	
General Data	RFI Filter	Built-In as a standard; Category C3.	
Enclosure	Drive	IP20 (UL Type 1 with optional kit)	
	Drive heat sink	UL Type 12	
Ambient	Max. operating ambient Temperature without D-rating (with Active Smart Thermal Management Feature) [6]	Surface Mounting	Frame-A to D: 50°C (122°F)
			Frame-E : 45°C (113°F)
		Flange Mounting	Frame-A to E front : 60°C (140°F) [7]
			Frame-A to D Heatsink : 50°C (122°F)
			Frame-E Heatsink: 45°C (113°F)
	Min. operating ambient Temperature	-10°C (14°F)	
	Humidity	5 ... 95 % non-condensing	
	Altitude	1000 meter w/o Derating; up to 4000 meter with derating [8]	
	Pollution degree	2 (EN50178 / IEC61800-5-1 / UL61800-5-1)	
	Conformal Coating	3C2 (IEC 60721-3-3:2002)	

NOTES:
1. *This output frequency range is valid considering the factory settings (e.g., rated switching frequency). It is possible to operate with higher output frequencies, limited to 1000 Hz, but the rated switching frequency must be increased. In these cases, WEG must be consulted.*
2. *The switching frequency can be automatically reduced due to inverter output overload, high ambient temperature, obstruction of air the circulation around the heatsink and/or operation with low output frequency.*
3. *For an operation with a switching frequency above the rated switching frequency, it is necessary to derate the drive output current. Please refer to the CFW900 user manual for more information.*
4. *Adjustment in 0.1 kHz steps.*
5. *The modulation type can be changed in parameter C1.4.1*
6. *The CFW900 can be used up to 60°C max. ambient temperautre with derating. Please refer to the CFW900 user manual for proper derating factor.*
7. *Exception: models CFW900C74P0T4 and CFW900D0146T4 that have specification of 55 °C (131 °F). For operation above 55 °C it is necessary to apply derating of 2 %/°C.*
8. *Please refer to the CFW900 user manual for proper derating factor for altitude higher than 1000 meter.*

CFW900

Technical Data

Motor Control	Method	Voltage Source
	Type of Control	V/F (Scalar)
		VVW: Voltage vector control
		Vector control with encoder
		Sensorless Vector control
	Supported Motors	Induction Machine
		Permanent magnet motor
	Modulation	SVPWM space vector PWM standard
		PWM optimized for long output cables
	Measurements and indications	Current measurement accuracy: 5% of the rated current
		Speed resolution: 1rpm
		Built-in real-time clock
Safety	Drive Protection	Output overcurrent/short-circuit
		Under/overvoltage
		Phase loss
		Overtemperature
		Overload on the motor, braking resistor and IGBTs
		Output phase-ground short-circuit
		External Fault/Alarm
	Functions (Built-in)	Safe torque off (STO) as per IEC 61800-5-2 or Stop category 0 as per IEC 60204-1
		Safe stop 1 time controlled (SS1-t) as per IEC 61800-5-2 or Stop category 1 as per IEC 60204-1
	Category	SIL 3, as per IEC 61508 / IEC 62061 / IEC 61800-5-2
		PL e / category 4, as per ISO 13849-1
	STO1 and STO2 Digital Input	Redundant inputs for OSSD signals or dry contact signals
	SP1 and SP2 test digital output	Outputs to power dry contact
	24VS power supply input	Input for 24 V power supply ± 15% to the internal safety module
Integral Keypad (HMI)	12 operator keys: Run/Stop, Direction of Rotation, Jog, Local/ Remote and browsing buttons: Left, Right, Up, Down, Enter, Back and Help	
	Graphical LCD display	
	View/edition of all parameters	
	Option of external mounting using: 1. unshielded pin-to-pin DB9 cable up to 20 m 2. shielded pin-to-pin DB9 cable up to 100 m.	
	Communication with smartphone using Bluetooth (for models equipped with CFW900-HMI-BLT).	
	USB communication with PC using WEG WPS	
	Allows powering the HMI and the control board through the USB port for inverter parameterization without powering up the network or DC link.	
	Bluetooth	
MicroSD Card Slot	One microSD card slot	
	Graphical LCD display	
	View/edition of all parameters	
	Card requirements: Maximum size of 32 GB; Industrial Temperature (-40 °C (-40 °F) to 85 °C (185 °F)); FAT32 file system.	
	MicroSD card not included with Drive	

Technical Data

Digital Inputs	Six (6) Digital inputs	
	Digital input DI1 to DI4	isolated digital inputs.
		Low level: Vdc -3 V to 5 V, I<1.5 mA
		High level: Vdc > 11 V, I>2 mA
		Current 8mA@24V (Typical)
		Maximum voltage: 30 Vdc
		Maximum current: 11mA@30Vdc
	Digital input DI5 and DI6	isolated digital inputs.
		Low level: Vdc -3 V to 5 V, I<1.5 mA
		High level: Vdc > 11 V, I>2 mA
		Current 8mA@24V (Typical)
		Maximum voltage: 30 Vdc
		Maximum current: 11mA@30Vdc
		Maximum frequency: 32 kHz
		Input for encoder signals (maximum cable length of 3 m)
Digital Outputs	2 transistor digital outputs (NPN)	
	Isolated from power circuits	
	Maximum current: 40 mA	
	Protected against short circuit to the GND	
	Maximum voltage: 24 Vdc	
	With freewheeling diode for 24 Vdc power supply	
	Maximum frequency: 32 kHz	
Relay Outputs (supplied with drive as a standard using one (1) CFW900-REL-01 module)	3 Relay outputs	
	Relay Output# 1: Form C (NO & NC contacts); Relay Output # 2 & 3: Form A (NO contact)	
	Maximum voltage: 30 Vdc, 250 Vac, OVC III	
	Maximum current: 2 A	
	Minimum current: 10 mA @5 Vdc	
	400 V TVS between contacts	
	Functional isolation between each relay output	
Analog Inputs	2 differential analog inputs	
	Isolated from power circuits	
	Levels: -10/0 at 10 V (11 bits + signal), 0/4 at 20 mA (10 bits)	
	Maximum voltage: 30 V	
	Maximum current: 25 mA	
	Impedance: 400 kΩ (voltage mode), 250 Ω (current mode)	
	Maximum common mode voltage: 10 V	
Analog outputs	2 analog outputs	
	Isolated from power circuits	
	Levels: 0 at 10 V (12 bits), 0/4 at 20 mA (12 bits)	
	Load: $R_L \geq 1$ Kohm (Voltage) or $R_L \leq 600$ ohm (Current)	
Communication	RS-485	Isolated RS-485 Interface
		Modbus-RTU Protocol
		Can be used to program the inverter via WEG WPS software application
	Dual Ethernet Ports	Two RJ-45 Ethernet connectors
		10/100 Mbps data rate with built-in dual port switch
		Protocol: Ethernet/IP or Modbus TCP
		Can be used to program the inverter via WEG WPS software application

Please refer to back cover for description of "NOTES"

CFW900

Technical Data

Safety Standards	UL61800-5-1 - "Adjustable Speed Electrical Power Drive Systems - Part 5-1: Safety Requirements - Electrical, Thermal and Energy". Note: "Suitable for Installation in a compartment handling conditioned air"	
	EN 61800-5-1 - "Safety requirements electrical, thermal and energy" isolated digital inputs.	
	EN 50178 - "Electronic equipment for use in power installations"	
Specification standards	EN 60146 (IEC 146) - "Semiconductor converters"	
	EN 61800-2 - "Adjustable speed electrical power drive systems - Part 2: general requirements - Rating specifications for low voltage adjustable frequency AC power drive systems	
Electromagnetic compatibility standards (EMC)	EN 61800-3 - "Adjustable speed electrical power drive systems - Part 3: EMC product standard including specific test methods"	
	EN 55011 - "Limits and methods of measurement of radio disturbance characteristics of industrial, scientific and medical (ISM) radio-frequency equipment"	
	CISPR 11 - Industrial, scientific and medical (ISM) radio-frequency equipment isolated digital inputs.	
	EN 61000-4-2 - "Electromagnetic compatibility (EMC) - Part 4: testing and measurement techniques - Sec. 2: electrostatic discharge immunity test"	
	EN 61000-4-3 - "Electromagnetic compatibility (EMC) - Part 4: testing and measurement techniques - Sec. 3: radiated, radio-frequency, electromagnetic field immunity test"	
	EN 61000-4-4 - "Electromagnetic compatibility (EMC) - Part 4: testing and measurement techniques - Sec. 4: electrical fast transient/burst immunity test"	
	EN 61000-4-5 - "Electromagnetic compatibility (EMC) - Part 4: testing and measurement techniques - Sec. 5: surge immunity test"	
	EN 61000-4-6 - "Electromagnetic compatibility (EMC) - Part 4: testing and measurement techniques - Sec. 6: immunity to conducted disturbances, induced by radio-frequency fields"	
	EN 61000-4-11 - "Testing and measurement techniques - Voltage dips, short interruptions and voltage variations immunity tests"	
Frame standards	EN 60529 - "Degrees of protection provided by enclosures (IP code)"	
	UL 50 - "Enclosures for electrical equipment"	
Ecodesign standards	IEC 61800-9-2 Parts 1 & 2 - "Adjustable speed electrical power drive systems - Ecodesign for power drive systems, motor starters, power electronics and their driven applications"	
Functional safety standards	EN 61800-5-2 - Adjustable speed electrical power drive systems - Part 5-2: Safety requirements - Functional	
	EN ISO 13849-1 - Safety of machinery - Safety-related parts of control systems - Part 1: General principles for design	
	EN 62061 - Safety of machinery - Functional safety of safety-related control systems	
	IEC 61508 Parts 1-7 - Functional safety of electrical/electronic/programmable electronic safety-related systems	
	EN 60204-1 - Safety of machinery - Electrical equipment of machines - Part 1: General requirements	
Directives	Low-Voltage	2014/35/EU
	EMC	2014/30/EU
	RoHS	2011/65/EU 2015/863/EU
	Ecodesign	2009/125/EC
	Machinery	2006/42/EC
Certifications	cULus	E184430
	Functional Safety	TÜV Rheinland Certificate
	CE	European Community
	UKCA	United Kingdom
	EAC	Russia
	C-Tick	Austrialia & New Zealand
	UL MX NOM	Mexico
	IRAM	Argentina

Please refer to back cover for description of "NOTES"

For detailed specifications, data sheets, drawings and performance curves visit http:// www.weg.net

Data subject to change without notice.

Dynamic Braking Resistors - 100% Braking Torque at 20% Duty Cycle (12 Seconds Max. Braking Time) - NEMA1 Enclosure

Motor Voltage	Motor HP (ND) [1]	CFW900 Catalog Number	Braking Resistor Catalog Number [2]	Rated Ohms	Rated Watts	Dimensions (in.) HxWxD [3]	List Price	Multiplier New (Old)
3 / 230 Vac	1 1/2	CFW900A04P6B2DB20Y2B	CFDB2-38-746	38	920	5 x 12 x 10	$1,025	GA (V1)
	2	CFW900A06P0B2DB20Y2B	CFDB2-38-746	38	920	5 x 12 x 10	$1,025	GA (V1)
	2	CFW900A07P5B2DB20Y2B	CFDB2-26-1119	26	1,170	5 x 12 x 13	$1,225	GA (V1)
	3	CFW900A10P0B2DB20Y2B	CFDB2-13-2238	12.6	2,580	5 x 19 x 10	$1,775	GA (V1)
	1 1/2	CFW900A04P6T2DB20Y2B	CFDB2-63-448	63	500	5 x 12 x 7	$825	GA (V1)
	2	CFW900A06P0T2DB20Y2B	CFDB2-63-448	63	500	5 x 12 x 7	$825	GA (V1)
	2	CFW900A07P5T2DB20Y2B	CFDB2-38-746	38	920	5 x 12 x 10	$1,025	GA (V1)
	3	CFW900A10P6T2DB20Y2B	CFDB2-19-1492	19	1,676	5 x 12 x 16	$1,430	GA (V1)
	5	CFW900A13P0T2DB20Y2B	CFDB2-19-1492	19	1,676	5 x 12 x 16	$1,430	GA (V1)
	7 1/2	CFW900A19P0T2DB20Y2B	CFDB2-13-2238	12.6	2,580	5 x 19 x 10	$1,775	GA (V1)
	10	CFW900B26P0T2DB20Y2B	CFDB2-13-2238	12.6	2,580	5 x 19 x 10	$1,775	GA (V1)
	10	CFW900B34P0T2DB20Y2B	CFDB2-13-2238	12.6	2,580	5 x 19 x 10	$1,775	GA (V1)
	15	CFW900B45P0T2DB20Y2B	CFDB2-13-2238	12.6	2,580	5 x 19 x 10	$1,775	GA (V1)
	20	CFW900C56P0T2DB20Y2B	CFDB2-8-3730	7.5	4,214	5 x 19 x 13	$2,150	GA (V1)
	25	CFW900C70P0T2DB20Y2B	CFDB2-7-4476	6.3	5,001	5 x 26.5 x 13	$2,780	GA (V1)
	30	CFW900C80P0T2DB20Y2B	CFDB2-7-4476	6.3	5,001	5 x 26.5 x 13	$2,780	GA (V1)
	40	CFW900D0110T2DB20Y2B	CFDB2-4-7460	3.9	7,800	10 x 28 x 10	$4,095	GA (V1)
	50	CFW900D0135T2DB20Y2B	CFDB2-4-7460	3.9	7,800	10 x 28 x 10	$4,095	GA (V1)
	60	CFW900D0150T2DB20Y2B	CFDB2-4-7460	3.9	7,800	10 x 28 x 10	$4,095	GA (V1)
	75	CFW900E0172T2DB20Y2B	CFDB2-3-11190	2.7	12,150	10 x 28 x 13	$6,010	GA (V1)
	75	CFW900E0195T2DB20Y2B	CFDB2-3-11190	2.7	12,150	10 x 28 x 13	$6,010	GA (V1)
	100	CFW900E0250T2DB20Y2B	CFDB2-3-11190	2.7	12,150	10 x 28 x 13	$6,010	GA (V1)
3 / 460 Vac	2	CFW900A02P8T4DB20Y2B	CFDB2-100-1119	100	1,280	5 x 12 x 13	$1,225	GA (V1)
	2	CFW900A03P6T4DB20Y2B	CFDB2-100-1119	100	1,280	5 x 12 x 13	$1,225	GA (V1)
	3	CFW900A04P8T4DB20Y2B	CFDB2-100-1119	100	1,280	5 x 12 x 13	$1,225	GA (V1)
	5	CFW900A06P5T4DB20Y2B	CFDB2-100-1119	100	1,280	5 x 12 x 13	$1,225	GA (V1)
	7 1/2	CFW900A09P6T4DB20Y2B	CFDB2-75-1492	75	1,815	5 x 12 x 16	$1,430	GA (V1)
	10	CFW900A14P0T4DB20Y2B	CFDB2-38-2984	38	3,352	5 x 19 x 16	$2,365	GA (V1)
	10	CFW900A17P0T4DB20Y2B	CFDB2-30-3730	30	4,374	5 x 26.5 x 13	$2,700	GA (V1)
	15/20	CFW900B26P0T4DB20Y2B	CFDB2-38-2984	38	3,352	5 x 19 x 16	$2,365	GA (V1)
	25	CFW900B33P0T4DB20Y2B	CFDB2-38-2984	38	3,352	5 x 19 x 16	$2,365	GA (V1)
	30	CFW900B39P0T4DB20Y2B	CFDB2-19-5968	19	6,703	5 x 26.5 x 16	$3,155	GA (V1)
	40	CFW900C50P0T4DB20Y2B	CFDB2-19-5968	19	6,703	5 x 26.5 x 16	$3,155	GA (V1)
	50	CFW900C62P0T4DB20Y2B	CFDB2-19-5968	19	6,703	5 x 26.5 x 16	$3,155	GA (V1)
	60	CFW900C74P0T4DB20Y2B	CFDB2-10-11190	10	12,800	10 x 28 x 16	$6,050	GA (V1)
	75	CFW900D96P0T4DB20Y2B	CFDB2-5-22380	5	25,600	24 x 30 x 18	$12,655	GA (V1)
	100	CFW900D0124T4DB20Y2B	CFDB2-5-22380	5	25,600	24 x 30 x 18	$12,655	GA (V1)
	125	CFW900D0146T4DB20Y2B	CFDB2-5-22380	5	25,600	24 x 30 x 18	$12,655	GA (V1)
	150	CFW900E0172T4DB20Y2B	CFDB2-5-29840	3.8	33,516	24 x 30 x 18	$12,655	GA (V1)
	175	CFW900E0203T4DB20Y2B	CFDB2-5-29840	3.8	33,516	24 x 30 x 18	$12,655	GA (V1)
	200	CFW900E0242T4DB20Y2B	CFDB2-4-29840	3.8	33,516	30 x 18 x 32	$12,655	GA (V1)

Notes:

1. "HP" rating based on WEG 4-Pole W22 motors' "average FLA values." Use as a guide only.

2. Dynamic Braking Resistors are non-stock items. Consult WEG for availability.

3. Dimensions are provided for estimating purposes only.

Please refer to back cover for description of "NOTES"

For detailed specifications, data sheets, drawings and performance curves visit http://www.weg.net

CFW900

Dynamic Braking Resistors - 100% Braking Torque at 50% Duty Cycle (30 Seconds Max. Braking Time) - NEMA1 Enclosure

Motor Voltage	Motor HP (ND) [1]	CFW900 Catalog Number	Braking Resistor Catalog Number [2]	Rated Ohms	Rated Watts	Dimensions (in.) HxWxD [3]	List Price	Multiplier New (Old)
3 / 230 Vac	1 1/2	CFW900A04P6B2DB20Y2B	CFDB5-38-1865	38	2,299	5 x 19 x 13	$1,965	GA (V1)
	2	CFW900A06P0B2DB20Y2B	CFDB5-38-1865	38	2,299	5 x 19 x 13	$1,965	GA (V1)
	2	CFW900A07P5B2DB20Y2B	CFDB5-26-2798	26	2,925	5 x 26.5 x 13	$2,700	GA (V1)
	3	CFW900A10P0B2DB20Y2B	CFDB5-13-5595	12.6	6,451	5 x 26.5 x 16	$3,155	GA (V1)
	1 1/2	CFW900A04P6T2DB20Y2B	CFDB5-63-1119	63	1,250	5 x 12 x 10	$1,225	GA (V1)
	2	CFW900A06P0T2DB20Y2B	CFDB5-63-1119	63	1,250	5 x 12 x 10	$1,225	GA (V1)
	2	CFW900A07P5T2DB20Y2B	CFDB5-38-1865	38	2,299	5 x 19 x 13	$1,965	GA (V1)
	3	CFW900A10P6T2DB20Y2B	CFDB5-19-3730	19	4,190	5 x 26.5 x 13	$2,700	GA (V1)
	5	CFW900A13P0T2DB20Y2B	CFDB5-19-3730	19	4,190	5 x 26.5 x 13	$2,700	GA (V1)
	7 1/2	CFW900A19P0T2DB20Y2B	CFDB5-13-5595	12.6	6,451	5 x 26.5 x 16	$3,155	GA (V1)
	10	CFW900B26P0T2DB20Y2B	CFDB5-13-5595	12.6	6,451	5 x 26.5 x 16	$3,155	GA (V1)
	10	CFW900B34P0T2DB20Y2B	CFDB5-13-5595	12.6	6,451	5 x 26.5 x 16	$3,155	GA (V1)
	15	CFW900B45P0T2DB20Y2B	CFDB5-13-5595	12.6	6,451	5 x 26.5 x 16	$3,155	GA (V1)
	20	CFW900C56P0T2DB20Y2B	CFDB5-8-9325	7.5	10,534	10 x 28 x 13	$4,990	GA (V1)
	25	CFW900C70P0T2DB20Y2B	CFDB5-7-11190	6.3	12,502	10 x 28 x16	$5,620	GA (V1)
	30	CFW900C80P0T2DB20Y2B	CFDB5-7-11190	6.3	12,502	10 x 28 x16	$5,620	GA (V1)
	40	CFW900D0110T2DB20Y2B	CFDB5-4-18650	3.9	19,500	24 x 30 x 18	$11,025	GA (V1)
	50	CFW900D0135T2DB20Y2B	CFDB5-4-18650	3.9	19,500	24 x 30 x 18	$11,025	GA (V1)
	60	CFW900D0150T2DB20Y2B	CFDB5-4-18650	3.9	19,500	24 x 30 x 18	$11,025	GA (V1)
	75	CFW900E0172T2DB20Y2B	CFDB5-3-27975	2.7	30,375	32 x 30 x 18	$16,420	GA (V1)
	75	CFW900E0195T2DB20Y2B	CFDB5-3-27975	2.7	30,375	32 x 30 x 18	$16,420	GA (V1)
	100	CFW900E0250T2DB20Y2B	CFDB5-3-27975	2.7	30,375	32 x 30 x 18	$16,420	GA (V1)
3 / 460 Vac	2	CFW900A02P8T4DB20Y2B	CFDB5-100-2798	100	3,200	5 x 19 x 16	$2,365	GA (V1)
	2	CFW900A03P6T4DB20Y2B	CFDB5-100-2798	100	3,200	5 x 19 x 16	$2,365	GA (V1)
	3	CFW900A04P8T4DB20Y2B	CFDB5-100-2798	100	3,200	5 x 19 x 16	$2,365	GA (V1)
	5	CFW900A06P5T4DB20Y2B	CFDB5-100-2798	100	3,200	5 x 19 x 16	$2,365	GA (V1)
	7 1/2	CFW900A09P6T4DB20Y2B	CFDB5-75-3730	75	4,538	5 x 26.5 x 16	$3,155	GA (V1)
	10	CFW900A14P0T4DB20Y2B	CFDB5-38-7460	38	8,379	10 x 28 x 13	$4,555	GA (V1)
	10	CFW900A17P0T4DB20Y2B	CFDB5-30-9325	30	10,935	10 x 28 x 16	$5,050	GA (V1)
	15/20	CFW900B26P0T4DB20Y2B	CFDB5-38-7460	38	8,379	10 x 28 x 13	$4,555	GA (V1)
	25	CFW900B33P0T4DB20Y2B	CFDB5-38-7460	38	8,379	10 x 28 x 13	$4,555	GA (V1)
	30	CFW900B39P0T4DB20Y2B	CFDB5-19-14920	19	16,758	24 x 30 x 18	$9,460	GA (V1)
	40	CFW900C50P0T4DB20Y2B	CFDB5-19-14920	19	16,758	24 x 30 x 18	$9,460	GA (V1)
	50	CFW900C62P0T4DB20Y2B	CFDB5-19-14920	19	16,758	24 x 30 x 18	$9,460	GA (V1)
	60	CFW900C74P0T4DB20Y2B	CFDB5-10-27975	10	32,000	32 x 30 x 18	$15,605	GA (V1)
	75	CFW900D96P0T4DB20Y2B	CFDB5-5-55950	5	64,000	48 x 30 x 18	$20,070	GA (V1)
	100	CFW900D0124T4DB20Y2B	CFDB5-5-55950	5	64,000	48 x 30 x 18	$20,070	GA (V1)
	125	CFW900D0146T4DB20Y2B	CFDB5-5-55950	5	64,000	48 x 30 x 18	$20,070	GA (V1)
	150	CFW900E0172T4DB20Y2B	CFDB5-4-74600	3.8	83,790	30 x 18 x 72	$33,780	GA (V1)
	175	CFW900E0203T4DB20Y2B	CFDB5-4-74600	3.8	83,790	30 x 18 x 72	$33,780	GA (V1)
	200	CFW900E0242T4DB20Y2B	CFDB5-4-74600	3.8	83,790	30 x 18 x 72	$33,780	GA (V1)

Notes:
1. "HP" rating based on WEG 4-Pole W22 motors' "average FLA values." Use as a guide only.
2. Dynamic Braking Resistors are non-stock items. Consult WEG for availability.
3. Dimensions are provided for estimating purposes only.

Please refer to back cover for description of "NOTES"

Data subject to change without notice.

EDP11 Series – Enclosed Drive Panels

The Engineered Drive Panel is an industrial general purpose AC motor control and protection package. It is designed for simple and quick installation and start-up, requiring only input power and output motor connections. There are two enclosure variants available such as NEMA 12 ventilated and NEMA 3R for outdoor installations.

The Engineered Drive Panel is built to complement the ruggedness and reliability of WEG motors, providing a complete, simple, and cost effective AC motor control, monitor and protection solution.

NEMA 12 Features

- CFW11 Drive
- Indoor rated
- ED1-ED4: non-ventilated and wall mounted
- ED5: non-ventilated and floor mounted
- ED6-ED10: ventilated and floor mounted
- Circuit breaker with through door handle
- CFW11 VFD (dual DC choke built-in)
- Fused 480V/120V CPT
- Internal fan
- Heat sink through the back
- Motor terminal block
- Door mounted keypad
- START/STOP pushbuttons
- RUN/FAULT pilot lights
- Keypad cover – same as GPH2
- Drive and controls mounted in NEMA 4 section of panel; heat sink is external and rated NEMA 12

NEMA 3R Features

- NEMA 12 features plus:
  - Outdoor rated
  - Weather kit (rain/sun/snow shield)
  - Panel space heater + thermostat
  - Lightning arrestor
  - Service entrance rated

3-Contactor Bypass Option

- NEMA 12 or NEMA 3R version
- AC3 full rated by-pass contactor
- Drive input and output contactors
- Motor overload relay
- E-stop mushroom style pushbutton
- Enclosure size to be determined

HOA/POT/TB Option

- HOA = HAND-OFF-AUTO
- POT = Potentiometer for Speed Reference
- TB = Auxiliary Control Terminal Block for Remote Command

EDP11 panels highlighted in GREEN on page #379 represent panels that are normally kept in stock.

EDP11 - ENGINEERED DRIVE PANEL

EDP11 Catalog Number Sequence

EDP11	S	024	G	N12	1	1	0	0	0

Configuration
S = Standard

Current Rating
003 = 3 Amps
007 = 7 Amps
024 = 24 Amps
045 = 45 Amps
070 = 70 Amps
105 = 105 Amps
180 = 180 Amps
211 = 211 Amps
370 = 370 Amps
515 = 515 Amps
720 = 720 Amps
1141 = 1141 Amps

Supply Voltage
D = 200-240 VAC
G = 460-480 VAC

Enclosure
N01 = NEMA 1
N12 = NEMA 12
N3R = NEMA 3R

3-Contactor Bypass [1]
1 = With Bypass
0 = No Bypass

Operator Devices
0 = No HOA, Pot, TB
1 = HOA, Pot, TB

Chart intended as reference only and not to create part numbers.
1) By-pass contactor and overload is "full rated" and mounted adjacent the VFD.

Engineered Drive Panel – NEMA 12 Enclosure (no By-Pass)

Motor Voltage	ND / VT[1]		HD / CT[1]		Catalog Number	Braking Transistor	Drive Frame Size	Enclosure Frame Size[4]	Approx. Weight (lbs)[7]	List Price	Multiplier New (old)
	Motor HP[2]	Drive Amps[3]	Motor HP[2]	Drive Amps[3]							
230 VAC	**Input Power Supply: Three-Phase 220-240 VAC**										
	2	7.0	1 1/2	5.5	**EDP11S007DN12**	Yes	A	ED1	36	**$6,690**	V1E (V1)
	3	10	2	8.0	**EDP11S010DN12**	Yes	A	ED1	36	**$6,756**	V1E (V1)
	5	13	3	11	**EDP11S013DN12**	Yes	A	ED1	41	**$6,855**	V1E (V1)
	5	16	5	13	**EDP11S016DN12**	Yes	A	ED1	42	**$7,123**	V1E (V1)
	7 1/2	24	7 1/2	20	**EDP11S024DN12**	Yes	B	ED1	56	**$7,664**	V1E (V1)
	10	28	10	24	**EDP11S028DN12**	Yes	B	ED1	56	**$8,408**	V1E (V1)
	10	33.5	10	28	**EDP11S033DN12**	Yes	B	ED1	56	**$9,108**	V1E (V1)
	15	45	15	36	**EDP11S045DN12**	Yes	C	ED2	88	**$10,214**	V1E (V1)
	20	54	20	45	**EDP11S054DN12**	Yes	C	ED2	90	**$11,491**	V1E (V1)
	25	70	20	56	**EDP11S070DN12**	Yes	C	ED2	100	**$12,162**	V1E (V1)
	30	86	25	70	**EDP11S086DN12**	Yes	D	ED3	230	**$14,321**	V1E (V1)
	40	105	30	86	**EDP11S105DN12**	Yes	D	ED3	240	**$17,164**	V1E (V1)
	50	142	40	115	**EDP11S142DN12**	No	E[5]	ED4	300	**$19,793**	V1E (V1)
	60	180	50	142	**EDP11S180DN12**	No	E[5]	ED4	300	**$25,116**	V1E (V1)
	75	211	60	180	**EDP11S211DN12**	No	E[5]	ED4	300	**$28,326**	V1E (V1)
460 VAC	**Input Power Supply: Three-Phase 460-480 VAC**										
	2	3.6	2	3.6	**EDP11S003GN12**	Yes	A	ED1	36	**$6,510**	V1E (V1)
	3	5.0	3	5.0	**EDP11S005GN12**	Yes	A	ED1	36	**$6,626**	V1E (V1)
	5	7.0	3	5.5	**EDP11S007GN12**	Yes	A	ED1	41	**$6,690**	V1E (V1)
	7 1/2	10	5	10	**EDP11S010GN12**	Yes	A	ED1	42	**$6,756**	V1E (V1)
	10	13.5	7 1/2	11	**EDP11S013GN12**	Yes	A	ED1	42	**$6,855**	V1E (V1)
	10	17	10	13.5	**EDP11S017GN12**	Yes	B	ED1	56	**$7,269**	V1E (V1)
	15	24	10	19	**EDP11S024GN12**	Yes	B	ED1	56	**$7,821**	V1E (V1)
	20	31	15	25	**EDP11S031GN12**	Yes	B	ED1	56	**$8,580**	V1E (V1)
	25	38	20	33	**EDP11S038GN12**	Yes	C	ED2	90	**$9,293**	V1E (V1)
	30	45	25	38	**EDP11S045GN12**	Yes	C	ED2	104	**$10,422**	V1E (V1)
	40	58.5	30	47	**EDP11S058GN12**	Yes	C	ED2	110	**$12,026**	V1E (V1)
	50/60	70.5	40	61	**EDP11S070GN12**	Yes	D	ED3	240	**$12,729**	V1E (V1)
	75	88	50	73	**EDP11S088GN12**	Yes	D	ED3	245	**$14,988**	V1E (V1)
	75	105	75	88	**EDP11S105GN12**	No	E[5]	ED4	300	**$17,964**	V1E (V1)
	100/125	142	75	115	**EDP11S142GN12**	No	E[5]	ED4	300	**$20,715**	V1E (V1)
	150	180	100	142	**EDP11S180GN12**	No	E[5]	ED4	300	**$26,286**	V1E (V1)
	175	211	125	180	**EDP11S211GN12**	No	E[5]	ED4	300	**$29,645**	V1E (V1)
	200	242	150	211	**EDP11S242GN12**	No	F[5]	ED6	700	**$40,755**	V1E (V1)
	250	312	200	242	**EDP11S312GN12**	No	F[5]	ED6	720	**$45,114**	V1E (V1)
	300	370	250	312	**EDP11S370GN12**	No	F[5]	ED6	750	**$47,743**	V1E (V1)
	400	477	300	370	**EDP11S477GN12**	No	F[5]	ED6	775	**$54,585**	V1E (V1)
	450	515	400	477	**EDP11S515GN12**	No	G[5]	ED8	1100	**$66,023**	V1E (V1)
	500	601	450	515	**EDP11S601GN12**	No	G[5]	ED8	1120	**$71,875**	V1E (V1)
	600	720	500	560	**EDP11S720GN12**	No	G[6]	ED8	1150	**$88,556**	V1E (V1)
	700	795	550	637	**EDP11S795GN12**	No	H[6]	ED10	1700	**$109,150**	V1E (V1)
	750	877	600	715	**EDP11S877GN12**	No	H[6]	ED10	1700	**$116,300**	V1E (V1)
	950	1062	750	855	**EDP11S1062GN12**	No	H[6]	ED10	1850	**$136,120**	V1E (V1)
	1000	1141	800	943	**EDP11S1141GN12**	No	H[6]	ED10	1850	**$147,575**	V1E (V1)

Notes:
1) CT (Constant Torque), 150% overload / 60 seconds; VT = Variable Torque (Quadratic Load), 110% overload / 60 seconds.
2) "HP" rating based on "average FLA values". Use as a guide only.
3) Motor FLA may vary with speed and manufacturer. ALWAYS compare motor FLA to nominal amps of drive.
4) ED1 - ED4 enclosures are non-ventilated and wall-mounted; ED6 - ED10 enclosures are ventilated and floor mounted.
5) Maximum 40°C ambient temperature without derating.
6) Maximum 35°C ambient temperature without derating.
7) Dimensions and weights are for estimating purposes only. Only use "AS BUILT" drawings for construction.
For other technical data please refer to WEG product manual.

EDP11 - ENGINEERED DRIVE PANEL

Engineered Drive Panel – NEMA 12 Enclosure with By-Pass

Motor Voltage	ND / VT[1]		HD / CT[1]		Catalog Number	Braking Transistor	Drive Frame Size	Enclosure Frame Size [4]	Approx. Weight (lbs) [7]	List Price	Multiplier New (old)
	Motor HP [2]	Drive Amps [3]	Motor HP [2]	Drive Amps [3]							
230 VAC	- Input Power Supply: Three-Phase 220-240 VAC										
	2	7.0	1 1/2	5.5	EDP11S007DN1210000	Yes	A	ED2	36	$8,200	V1E (V1)
	3	10	2	8.0	EDP11S010DN1210000	Yes	A	ED2	36	$8,276	V1E (V1)
	5	13	3	11	EDP11S013DN1210000	Yes	A	ED2	41	$8,375	V1E (V1)
	5	16	5	13	EDP11S016DN1210000	Yes	A	ED2	42	$8,643	V1E (V1)
	7 1/2	24	7 1/2	20	EDP11S024DN1210000	Yes	B	ED2	56	$9,262	V1E (V1)
	10	28	10	24	EDP11S028DN1210000	Yes	B	ED2	56	$10,200	V1E (V1)
	10	33.5	10	28	EDP11S033DN1210000	Yes	B	ED2	56	$11,011	V1E (V1)
	15	45	15	36	EDP11S045DN1210000	Yes	C	ED3	88	$12,316	V1E (V1)
	20	54	20	45	EDP11S054DN1210000	Yes	C	ED3	90	$13,738	V1E (V1)
	25	70	20	56	EDP11S070DN1210000	Yes	C	ED3	100	$14,857	V1E (V1)
	30	86	25	70	EDP11S086DN1210000	Yes	D	ED4	230	$17,016	V1E (V1)
	40	105	30	86	EDP11S105DN1210000	Yes	D	ED4	240	$20,052	V1E (V1)
	50	142	40	115	EDP11S142DN1210000	No	E[5]	ED5	300	$24,778	V1E (V1)
	60	180	50	142	EDP11S180DN1210000	No	E[5]	ED5	300	$31,111	V1E (V1)
	75	211	60	180	EDP11S211DN1210000	No	E[5]	ED5	300	$35,651	V1E (V1)
460 VAC	- Input Power Supply: Three-Phase 460-480 VAC										
	2	3.6	2	3.6	EDP11S003GN1210000	Yes	A	ED2	36	$8,020	V1E (V1)
	3	5.0	3	5.0	EDP11S005GN1210000	Yes	A	ED2	36	$8,136	V1E (V1)
	5	7.0	3	5.5	EDP11S007GN1210000	Yes	A	ED2	41	$8,200	V1E (V1)
	7 1/2	10	5	10	EDP11S010GN1210000	Yes	A	ED2	42	$8,276	V1E (V1)
	10	13.5	7 1/2	11	EDP11S013GN1210000	Yes	A	ED2	42	$8,375	V1E (V1)
	10	17	10	13.5	EDP11S017GN1210000	Yes	B	ED2	56	$8,867	V1E (V1)
	15	24	10	19	EDP11S024GN1210000	Yes	B	ED2	56	$9,613	V1E (V1)
	20	31	15	25	EDP11S031GN1210000	Yes	B	ED2	56	$10,483	V1E (V1)
	25	38	20	33	EDP11S038GN1210000	Yes	C	ED3	90	$11,395	V1E (V1)
	30	45	25	38	EDP11S045GN1210000	Yes	C	ED3	104	$12,669	V1E (V1)
	40	58.5	30	47	EDP11S058GN1210000	Yes	C	ED3	110	$14,721	V1E (V1)
	50/60	70.5	40	61	EDP11S070GN1210000	Yes	D	ED4	240	$15,424	V1E (V1)
	75	88	50	73	EDP11S088GN1210000	Yes	D	ED4	245	$17,876	V1E (V1)
	75	105	75	88	EDP11S105GN1210000	No	E[5]	ED5	300	$21,308	V1E (V1)
	100/125	142	75	115	EDP11S142GN1210000	No	E[5]	ED5	300	$25,700	V1E (V1)
	150	180	100	142	EDP11S180GN1210000	No	E[5]	ED5	300	$32,281	V1E (V1)
	175	211	125	180	EDP11S211GN1210000	No	E[5]	ED5	300	$36,970	V1E (V1)
	200	242	150	211	EDP11S242GN1210000	No	F[5]	ED7	700	$53,334	V1E (V1)
	250	312	200	242	EDP11S312GN1210000	No	F[5]	ED7	720	$59,257	V1E (V1)
	300	370	250	312	EDP11S370GN1210000	No	F[5]	ED7	750	$62,146	V1E (V1)
	400	477	300	370	EDP11S477GN1210000	No	F[5]	ED7	775	$76,618	V1E (V1)
	450	515	400	477	EDP11S515GN1210000	No	G[5]	ED9	1100	$88,056	V1E (V1)
	500	601	450	515	EDP11S601GN1210000	No	G[5]	ED9	1120	$99,447	V1E (V1)
	600	720	500	560	EDP11S720GN1210000	No	G[6]	ED9	1150	$119,944	V1E (V1)

Notes:
1) CT (Constant Torque), 150% overload / 60 seconds; VT = Variable Torque (Quadratic Load), 110% overload / 60 seconds.
2) "HP" rating based on "average FLA values". Use as a guide only.
3) Motor FLA may vary with speed and manufacturer. ALWAYS compare motor FLA to nominal amps of drive.
4) ED1 - ED5 enclosures are non-ventilated and wall-mounted (ED5 - free standing); ED6 - ED9 enclosures are ventilated and floor mounted.
5) Maximum 40°C ambient temperature without derating.
6) Maximum 35°C ambient temperature without derating.
7) Dimensions and weights are for estimating purposes only. Only use "AS BUILT" drawings for construction.
For other technical data please refer to WEG product manual.

Please refer to back cover for description of "NOTES"

For detailed specifications, data sheets, drawings and performance curves visit http:// www.weg.net

Data subject to change without notice.

Engineered Drive Panel – NEMA 12 Enclosure (no By-Pass) with HOA / Pot / TB

Motor Voltage	ND / VT[1]		HD / CT[1]		Catalog Number	Braking Transistor	Drive Frame Size	Enclosure Frame Size [4]	Approx. Weight (lbs) [7]	List Price	Multiplier New (old)
	Motor HP [2]	Drive Amps [3]	Motor HP [2]	Drive Amps [3]							
230 VAC	**Input Power Supply: Three-Phase 220-240 VAC**										
	2	7.0	1 1/2	5.5	EDP11S007DN1201000	Yes	A	ED1	36	**$7,453**	V1E (V1)
	3	10	2	8.0	EDP11S010DN1201000	Yes	A	ED1	36	**$7,519**	V1E (V1)
	5	13	3	11	EDP11S013DN1201000	Yes	A	ED1	41	**$7,618**	V1E (V1)
	5	16	5	13	EDP11S016DN1201000	Yes	A	ED1	42	**$7,886**	V1E (V1)
	7 1/2	24	7 1/2	20	EDP11S024DN1201000	Yes	B	ED1	56	**$8,427**	V1E (V1)
	10	28	10	24	EDP11S028DN1201000	Yes	B	ED1	56	**$9,171**	V1E (V1)
	10	33.5	10	28	EDP11S033DN1201000	Yes	B	ED1	56	**$9,871**	V1E (V1)
	15	45	15	36	EDP11S045DN1201000	Yes	C	ED2	88	**$10,977**	V1E (V1)
	20	54	20	45	EDP11S054DN1201000	Yes	C	ED2	90	**$12,254**	V1E (V1)
	25	70	20	56	EDP11S070DN1201000	Yes	C	ED2	100	**$12,925**	V1E (V1)
	30	86	25	70	EDP11S086DN1201000	Yes	D	ED3	230	**$15,084**	V1E (V1)
	40	105	30	86	EDP11S105DN1201000	Yes	D	ED3	240	**$17,927**	V1E (V1)
	50	142	40	115	EDP11S142DN1201000	No	E[5]	ED4	300	**$20,556**	V1E (V1)
	60	180	50	142	EDP11S180DN1201000	No	E[5]	ED4	300	**$25,879**	V1E (V1)
	75	211	60	180	EDP11S211DN1201000	No	E[5]	ED4	300	**$29,089**	V1E (V1)
460 VAC	**Input Power Supply: Three-Phase 460-480 VAC**										
	2	3.6	2	3.6	EDP11S003GN1201000	Yes	A	ED1	36	**$7,273**	V1E (V1)
	3	5.0	3	5.0	EDP11S005GN1201000	Yes	A	ED1	36	**$7,389**	V1E (V1)
	5	7.0	3	5.5	EDP11S007GN1201000	Yes	A	ED1	41	**$7,453**	V1E (V1)
	7 1/2	10	5	10	EDP11S010GN1201000	Yes	A	ED1	42	**$7,519**	V1E (V1)
	10	13.5	7 1/2	11	EDP11S013GN1201000	Yes	A	ED1	42	**$7,618**	V1E (V1)
	10	17	10	13.5	EDP11S017GN1201000	Yes	B	ED1	56	**$8,032**	V1E (V1)
	15	24	10	19	EDP11S024GN1201000	Yes	B	ED1	56	**$8,584**	V1E (V1)
	20	31	15	25	EDP11S031GN1201000	Yes	B	ED1	56	**$9,343**	V1E (V1)
	25	38	20	33	EDP11S038GN1201000	Yes	C	ED2	90	**$10,056**	V1E (V1)
	30	45	25	38	EDP11S045GN1201000	Yes	C	ED2	104	**$11,185**	V1E (V1)
	40	58.5	30	47	EDP11S058GN1201000	Yes	C	ED2	110	**$12,789**	V1E (V1)
	50/60	70.5	40	61	EDP11S070GN1201000	Yes	D	ED3	240	**$13,492**	V1E (V1)
	75	88	50	73	EDP11S088GN1201000	Yes	D	ED3	245	**$15,751**	V1E (V1)
	75	105	75	88	EDP11S105GN1201000	No	E[5]	ED4	300	**$18,727**	V1E (V1)
	100/125	142	75	115	EDP11S142GN1201000	No	E[5]	ED4	300	**$21,478**	V1E (V1)
	150	180	100	142	EDP11S180GN1201000	No	E[5]	ED4	300	**$27,049**	V1E (V1)
	175	211	125	180	EDP11S211GN1201000	No	E[5]	ED4	300	**$30,408**	V1E (V1)
	200	242	150	211	EDP11S242GN1201000	No	F[5]	ED6	700	**$41,613**	V1E (V1)
	250	312	200	242	EDP11S312GN1201000	No	F[5]	ED6	720	**$45,972**	V1E (V1)
	300	370	250	312	EDP11S370GN1201000	No	F[5]	ED6	750	**$48,601**	V1E (V1)
	400	477	300	370	EDP11S477GN1201000	No	F[5]	ED6	775	**$55,443**	V1E (V1)
	450	515	400	477	EDP11S515GN1201000	No	G[5]	ED8	1100	**$66,881**	V1E (V1)
	500	601	450	515	EDP11S601GN1201000	No	G[5]	ED8	1120	**$72,733**	V1E (V1)
	600	720	500	560	EDP11S720GN1201000	No	G[6]	ED8	1150	**$89,414**	V1E (V1)
	700	795	550	637	EDP11S795GN1201000	No	H[6]	ED10	1700	**$110,008**	V1E (V1)
	750	877	600	715	EDP11S877GN1201000	No	H[6]	ED10	1700	**$117,158**	V1E (V1)
	950	1062	750	855	EDP11S1062GN1201000	No	H[6]	ED10	1850	**$136,978**	V1E (V1)
	1000	1141	800	943	EDP11S1141GN1201000	No	H[6]	ED10	1850	**$148,433**	V1E (V1)

Notes:
1) CT (Constant Torque), 150% overload / 60 seconds; VT = Variable Torque (Quadratic Load), 110% overload / 60 seconds.
2) "HP" rating based on "average FLA values". Use as a guide only.
3) Motor FLA may vary with speed and manufacturer. ALWAYS compare motor FLA to nominal amps of drive.
4) ED1 - ED4 enclosures are non-ventilated and wall-mounted; ED6 - ED10 enclosures are ventilated and floor mounted.
5) Maximum 40°C ambient temperature without derating
6) Maximum 35°C ambient temperature without derating
7) Dimensions and weights are for estimating purposes only. Only use "AS BUILT" drawings for construction.
For other technical data please refer to WEG product manual.

For detailed specifications, data sheets, drawings and performance curves visit http://www.weg.net

EDP11 - ENGINEERED DRIVE PANEL

Engineered Drive Panel – NEMA 12 Enclosure with By-Pass and HOA / Pot / TB

Motor Voltage	ND / VT[1]		HD / CT[1]		Catalog Number	Braking Transistor	Drive Frame Size	Enclosure Frame Size [4]	Approx. Weight (lbs) [7]	List Price	Multiplier New (old)
	Motor HP [2]	Drive Amps[3]	Motor HP [2]	Drive Amps [3]							
230 VAC	**Input Power Supply: Three-Phase 220-240 VAC**										
	2	7.0	1 1/2	5.5	EDP11S007DN1211000	Yes	A	ED2	36	**$8,963**	V1E (V1)
	3	10	2	8.0	EDP11S010DN1211000	Yes	A	ED2	36	**$9,039**	V1E (V1)
	5	13	3	11	EDP11S013DN1211000	Yes	A	ED2	41	**$9,138**	V1E (V1)
	5	16	5	13	EDP11S016DN1211000	Yes	A	ED2	42	**$9,406**	V1E (V1)
	7 1/2	24	7 1/2	20	EDP11S024DN1211000	Yes	B	ED2	56	**$10,025**	V1E (V1)
	10	28	10	24	EDP11S028DN1211000	Yes	B	ED2	56	**$10,963**	V1E (V1)
	10	33.5	10	28	EDP11S033DN1211000	Yes	B	ED2	56	**$11,774**	V1E (V1)
	15	45	15	36	EDP11S045DN1211000	Yes	C	ED3	88	**$13,079**	V1E (V1)
	20	54	20	45	EDP11S054DN1211000	Yes	C	ED3	90	**$14,501**	V1E (V1)
	25	70	20	56	EDP11S070DN1211000	Yes	C	ED3	100	**$15,620**	V1E (V1)
	30	86	25	70	EDP11S086DN1211000	Yes	D	ED4	230	**$17,779**	V1E (V1)
	40	105	30	86	EDP11S105DN1211000	Yes	D	ED4	240	**$20,815**	V1E (V1)
	50	142	40	115	EDP11S142DN1211000	No	E[5]	ED5	300	**$25,541**	V1E (V1)
	60	180	50	142	EDP11S180DN1211000	No	E[5]	ED5	300	**$31,874**	V1E (V1)
	75	211	60	180	EDP11S211DN1211000	No	E[5]	ED5	300	**$36,414**	V1E (V1)
460 VAC	**Input Power Supply: Three-Phase 460-480 VAC**										
	2	3.6	2	3.6	EDP11S003GN1211000	Yes	A	ED2	36	**$8,783**	V1E (V1)
	3	5.0	3	5.0	EDP11S005GN1211000	Yes	A	ED2	36	**$8,899**	V1E (V1)
	5	7.0	3	5.5	EDP11S007GN1211000	Yes	A	ED2	41	**$8,963**	V1E (V1)
	7 1/2	10	5	10	EDP11S010GN1211000	Yes	A	ED2	42	**$9,039**	V1E (V1)
	10	13.5	7 1/2	11	EDP11S013GN1211000	Yes	A	ED2	42	**$9,138**	V1E (V1)
	10	17	10	13.5	EDP11S017GN1211000	Yes	B	ED2	56	**$9,630**	V1E (V1)
	15	24	10	19	EDP11S024GN1211000	Yes	B	ED2	56	**$10,376**	V1E (V1)
	20	31	15	25	EDP11S031GN1211000	Yes	B	ED2	56	**$11,246**	V1E (V1)
	25	38	20	33	EDP11S038GN1211000	Yes	C	ED3	90	**$12,158**	V1E (V1)
	30	45	25	38	EDP11S045GN1211000	Yes	C	ED3	104	**$13,432**	V1E (V1)
	40	58.5	30	47	EDP11S058GN1211000	Yes	C	ED3	110	**$15,484**	V1E (V1)
	50/60	70.5	40	61	EDP11S070GN1211000	Yes	D	ED4	240	**$16,187**	V1E (V1)
	75	88	50	73	EDP11S088GN1211000	Yes	D	ED4	245	**$18,639**	V1E (V1)
	75	105	75	88	EDP11S105GN1211000	No	E[5]	ED5	300	**$22,071**	V1E (V1)
	100/125	142	75	115	EDP11S142GN1211000	No	E[5]	ED5	300	**$26,463**	V1E (V1)
	150	180	100	142	EDP11S180GN1211000	No	E[5]	ED5	300	**$33,044**	V1E (V1)
	175	211	125	180	EDP11S211GN1211000	No	E[5]	ED5	300	**$37,733**	V1E (V1)
	200	242	150	211	EDP11S242GN1211000	No	F[5]	ED7	700	**$54,097**	V1E (V1)
	250	312	200	242	EDP11S312GN1211000	No	F[5]	ED7	720	**$60,115**	V1E (V1)
	300	370	250	312	EDP11S370GN1211000	No	F[5]	ED7	750	**$63,004**	V1E (V1)
	400	477	300	370	EDP11S477GN1211000	No	F[5]	ED7	775	**$77,476**	V1E (V1)
	450	515	400	477	EDP11S515GN1211000	No	G[5]	ED9	1100	**$88,914**	V1E (V1)
	500	601	450	515	EDP11S601GN1211000	No	G[5]	ED9	1120	**$100,305**	V1E (V1)
	600	720	500	560	EDP11S720GN1211000	No	G[6]	ED9	1150	**$120,802**	V1E (V1)

Notes:
1) CT (Constant Torque), 150% overload / 60 seconds; VT = Variable Torque (Quadratic Load), 110% overload / 60 seconds.
2) "HP" rating based on "average FLA values". Use as a guide only.
3) Motor FLA may vary with speed and manufacturer. ALWAYS compare motor FLA to nominal amps of drive.
4) ED1 - ED4 enclosures are non-ventilated and wall-mounted; ED6 - ED10 enclosures are ventilated and floor mounted.
5) Maximum 45°C ambient temperature without derating.
6) Maximum 40°C ambient temperature without derating.
7) Maximum 35°C ambient temperature without derating.

Please refer to back cover for description of "NOTES"

Data subject to change without notice.

Engineered Drive Panel – NEMA 3R Enclosure (no By-Pass)

Motor Voltage	ND / VT[1]		HD / CT[1]		Catalog Number	Braking Transistor	Drive Frame Size	Enclosure Frame Size [4]	Approx. Weight (lbs) [7]	List Price	Multiplier New (old)
	Motor HP [2]	Drive Amps[3]	Motor HP [2]	Drive Amps [3]							
230 VAC	**Input Power Supply: Three-Phase 220-240 VAC**										
	2	7.0	1 1/2	5.5	EDP11S007DN3R	Yes	A[5]	ED1	36	**$8,521**	V1E (V1)
	3	10	2	8.0	EDP11S010DN3R	Yes	A[5]	ED1	36	**$8,587**	V1E (V1)
	5	13	3	11	EDP11S013DN3R	Yes	A[5]	ED1	41	**$8,686**	V1E (V1)
	5	16	5	13	EDP11S016DN3R	Yes	A[5]	ED1	42	**$8,918**	V1E (V1)
	7 1/2	24	7 1/2	20	EDP11S024DN3R	Yes	B[5]	ED1	56	**$9,459**	V1E (V1)
	10	28	10	24	EDP11S028DN3R	Yes	B[5]	ED1	56	**$10,202**	V1E (V1)
	10	33.5	10	28	EDP11S033DN3R	Yes	B[5]	ED1	56	**$10,902**	V1E (V1)
	15	45	15	36	EDP11S045DN3R	Yes	C[5]	ED2	88	**$12,122**	V1E (V1)
	20	54	20	45	EDP11S054DN3R	Yes	C[5]	ED2	90	**$13,400**	V1E (V1)
	25	70	20	56	EDP11S070DN3R	Yes	C[5]	ED2	100	**$14,162**	V1E (V1)
	30	86	25	70	EDP11S086DN3R	Yes	D[5]	ED3	230	**$16,320**	V1E (V1)
	40	105	30	86	EDP11S105DN3R	Yes	D[5]	ED3	240	**$19,338**	V1E (V1)
	50	142	40	115	EDP11S142DN3R	No	E[6]	ED4	300	**$21,967**	V1E (V1)
	60	180	50	142	EDP11S180DN3R	No	E[6]	ED4	300	**$27,290**	V1E (V1)
	75	211	60	180	EDP11S211DN3R	No	E[6]	ED4	300	**$30,499**	V1E (V1)
460 VAC	**Input Power Supply: Three-Phase 460-480 VAC**										
	2	3.6	2	3.6	EDP11S003GN3R	Yes	A[5]	ED1	36	**$8,341**	V1E (V1)
	3	5.0	3	5.0	EDP11S005GN3R	Yes	A[5]	ED1	36	**$8,457**	V1E (V1)
	5	7.0	3	5.5	EDP11S007GN3R	Yes	A[5]	ED1	41	**$8,521**	V1E (V1)
	7 1/2	10	5	10	EDP11S010GN3R	Yes	A[5]	ED1	42	**$8,587**	V1E (V1)
	10	13.5	7 1/2	11	EDP11S013GN3R	Yes	A[5]	ED1	42	**$8,686**	V1E (V1)
	10	17	10	13.5	EDP11S017GN3R	Yes	B[5]	ED1	56	**$9,100**	V1E (V1)
	15	24	10	19	EDP11S024GN3R	Yes	B[5]	ED1	56	**$9,652**	V1E (V1)
	20	31	15	25	EDP11S031GN3R	Yes	B[5]	ED1	56	**$10,411**	V1E (V1)
	25	38	20	33	EDP11S038GN3R	Yes	C[5]	ED2	90	**$11,125**	V1E (V1)
	30	45	25	38	EDP11S045GN3R	Yes	C[5]	ED2	104	**$12,369**	V1E (V1)
	40	58.5	30	47	EDP11S058GN3R	Yes	C[5]	ED2	110	**$13,673**	V1E (V1)
	50/60	70.5	40	61	EDP11S070GN3R	Yes	D[5]	ED3	240	**$14,451**	V1E (V1)
	75	88	50	73	EDP11S088GN3R	Yes	D[5]	ED3	245	**$16,653**	V1E (V1)
	75	105	75	88	EDP11S105GN3R	No	E[6]	ED4	300	**$19,733**	V1E (V1)
	100/125	142	75	115	EDP11S142GN3R	No	E[6]	ED4	300	**$22,415**	V1E (V1)
	150	180	100	142	EDP11S180GN3R	No	E[6]	ED4	300	**$27,847**	V1E (V1)
	175	211	125	180	EDP11S211GN3R	No	E[6]	ED4	300	**$31,122**	V1E (V1)
	200	242	150	211	EDP11S242GN3R	No	F[6]	ED6	700	**$45,693**	V1E (V1)
	250	312	200	242	EDP11S312GN3R	No	F[6]	ED6	720	**$50,053**	V1E (V1)
	300	370	250	312	EDP11S370GN3R	No	F[6]	ED6	750	**$52,682**	V1E (V1)
	400	477	300	370	EDP11S477GN3R	No	F[6]	ED6	775	**$59,523**	V1E (V1)
	450	515	400	477	EDP11S515GN3R	No	G[6]	ED8	1100	**$71,976**	V1E (V1)
	500	601	450	515	EDP11S601GN3R	No	G[6]	ED8	1120	**$77,828**	V1E (V1)
	600	720	500	560	EDP11S720GN3R	No	G[7]	ED8	1150	**$94,509**	V1E (V1)
	700	795	550	637	EDP11S795GN3R	No	H[7]	ED10	1700	**$116,480**	V1E (V1)
	750	877	600	715	EDP11S877GN3R	No	H[7]	ED10	1700	**$123,630**	V1E (V1)
	950	1062	750	855	EDP11S1062GN3R	No	H[7]	ED10	1850	**$142,890**	V1E (V1)
	1000	1141	800	943	EDP11S1141GN3R	No	H[7]	ED10	1850	**$154,345**	V1E (V1)

Notes:
1) CT (Constant Torque), 150% overload / 60 seconds; VT = Variable Torque (Quadratic Load), 110% overload / 60 seconds.
2) "HP" rating based on "average FLA values". Use as a guide only.
3) Motor FLA may vary with speed and manufacturer. ALWAYS compare motor FLA to nominal amps of drive.
4) ED1 - ED4 enclosures are non-ventilated and wall-mounted; ED6 - ED10 enclosures are ventilated and floor mounted.
5) Maximum 45°C ambient temperature without derating.
6) Maximum 40°C ambient temperature without derating.
7) Maximum 35°C ambient temperature without derating.
8) Dimensions and weights are for estimating purposes only. Only use "AS BUILT" drawings for construction.
For other technical data please refer to WEG product manual.

For detailed specifications, data sheets, drawings and performance curves visit http://www.weg.net

EDP11 - ENGINEERED DRIVE PANEL

Engineered Drive Panel – NEMA 3R Enclosure with By-Pass

Motor Voltage	ND / VT[1]		HD / CT[1]		Catalog Number	Braking Transistor	Drive Frame Size	Enclosure Frame Size [4]	Approx. Weight (lbs) [7]	List Price	Multiplier New (old)
	Motor HP [2]	Drive Amps[3]	Motor HP [2]	Drive Amps [3]							
230 VAC	**Input Power Supply: Three-Phase 220-240 VAC**										
	2	7.0	1 1/2	5.5	EDP11S007DN3R10000	Yes	A[5]	ED2	36	$10,031	V1E (V1)
	3	10	2	8.0	EDP11S010DN3R10000	Yes	A[5]	ED2	36	$10,107	V1E (V1)
	5	13	3	11	EDP11S013DN3R10000	Yes	A[5]	ED2	41	$10,206	V1E (V1)
	5	16	5	13	EDP11S016DN3R10000	Yes	A[5]	ED2	42	$10,438	V1E (V1)
	7 1/2	24	7 1/2	20	EDP11S024DN3R10000	Yes	B[5]	ED2	56	$11,057	V1E (V1)
	10	28	10	24	EDP11S028DN3R10000	Yes	B[5]	ED2	56	$11,994	V1E (V1)
	10	33.5	10	28	EDP11S033DN3R10000	Yes	B[5]	ED2	56	$12,805	V1E (V1)
	15	45	15	36	EDP11S045DN3R10000	Yes	C[5]	ED3	88	$14,224	V1E (V1)
	20	54	20	45	EDP11S054DN3R10000	Yes	C[5]	ED3	90	$15,647	V1E (V1)
	25	70	20	56	EDP11S070DN3R10000	Yes	C[5]	ED3	100	$16,857	V1E (V1)
	30	86	25	70	EDP11S086DN3R10000	Yes	D[5]	ED4	230	$19,015	V1E (V1)
	40	105	30	86	EDP11S105DN3R10000	Yes	D[5]	ED4	240	$22,226	V1E (V1)
	50	142	40	115	EDP11S142DN3R10000	No	E[6]	ED5	300	$26,952	V1E (V1)
	60	180	50	142	EDP11S180DN3R10000	No	E[6]	ED5	300	$33,285	V1E (V1)
	75	211	60	180	EDP11S211DN3R10000	No	E[6]	ED5	300	$37,824	V1E (V1)
460 VAC	**Input Power Supply: Three-Phase 460-480 VAC**										
	2	3.6	2	3.6	EDP11S003GN3R10000	Yes	A[5]	ED2	36	$9,851	V1E (V1)
	3	5.0	3	5.0	EDP11S005GN3R10000	Yes	A[5]	ED2	36	$9,967	V1E (V1)
	5	7.0	3	5.5	EDP11S007GN3R10000	Yes	A[5]	ED2	41	$10,031	V1E (V1)
	7 1/2	10	5	10	EDP11S010GN3R10000	Yes	A[5]	ED2	42	$10,107	V1E (V1)
	10	13.5	7 1/2	11	EDP11S013GN3R10000	Yes	A[5]	ED2	42	$10,206	V1E (V1)
	10	17	10	13.5	EDP11S017GN3R10000	Yes	B[5]	ED2	56	$10,698	V1E (V1)
	15	24	10	19	EDP11S024GN3R10000	Yes	B[5]	ED2	56	$11,444	V1E (V1)
	20	31	15	25	EDP11S031GN3R10000	Yes	B[5]	ED2	56	$12,314	V1E (V1)
	25	38	20	33	EDP11S038GN3R10000	Yes	C[5]	ED3	90	$13,227	V1E (V1)
	30	45	25	38	EDP11S045GN3R10000	Yes	C[5]	ED3	104	$14,616	V1E (V1)
	40	58.5	30	47	EDP11S058GN3R10000	Yes	C[5]	ED3	110	$16,368	V1E (V1)
	50/60	70.5	40	61	EDP11S070GN3R10000	Yes	D[5]	ED4	240	$17,146	V1E (V1)
	75	88	50	73	EDP11S088GN3R10000	Yes	D[5]	ED4	245	$19,541	V1E (V1)
	75	105	75	88	EDP11S105GN3R10000	No	E[6]	ED5	300	$23,077	V1E (V1)
	100/125	142	75	115	EDP11S142GN3R10000	No	E[6]	ED5	300	$27,400	V1E (V1)
	150	180	100	142	EDP11S180GN3R10000	No	E[6]	ED5	300	$33,842	V1E (V1)
	175	211	125	180	EDP11S211GN3R10000	No	E[6]	ED5	300	$38,447	V1E (V1)
	200	242	150	211	EDP11S242GN3R10000	No	F[6]	ED7	700	$58,272	V1E (V1)
	250	312	200	242	EDP11S312GN3R10000	No	F[6]	ED7	720	$64,196	V1E (V1)
	300	370	250	312	EDP11S370GN3R10000	No	F[6]	ED7	750	$67,085	V1E (V1)
	400	477	300	370	EDP11S477GN3R10000	No	F[6]	ED7	775	$81,556	V1E (V1)
	450	515	400	477	EDP11S515GN3R10000	No	G[6]	ED9	1100	$94,009	V1E (V1)
	500	601	450	515	EDP11S601GN3R10000	No	G[6]	ED9	1120	$105,400	V1E (V1)
	600	720	500	560	EDP11S720GN3R10000	No	G[7]	ED9	1150	$125,897	V1E (V1)

Notes:
1) CT (Constant Torque), 150% overload / 60 seconds; VT = Variable Torque (Quadratic Load), 110% overload / 60 seconds.
2) "HP" rating based on "average FLA values". Use as a guide only.
3) Motor FLA may vary with speed and manufacturer. ALWAYS compare motor FLA to nominal amps of drive.
4) ED1 - ED5 enclosures are non-ventilated and wall-mounted (ED5 - free standing); ED6 - ED9 enclosures are ventilated and floor mounted.
5) Maximum 45°C ambient temperature without derating.
6) Maximum 40°C ambient temperature without derating.
7) Maximum 35°C ambient temperature without derating
8) Dimensions and weights are for estimating purposes only. Only use "AS BUILT" drawings for construction.
For other technical data please refer to WEG product manual.

Please refer to back cover for description of "NOTES"

For detailed specifications, data sheets, drawings and performance curves visit http:// www.weg.net

Data subject to change without notice.

Engineered Drive Panel – NEMA 3R Enclosure (no By-Pass) with HOA / Pot / TB

Motor Voltage	ND / VT[1]		HD / CT[1]		Catalog Number	Braking Transistor	Drive Frame Size	Enclosure Frame Size [4]	Approx. Weight (lbs) [7]	List Price	Multiplier New (old)
	Motor HP[2]	Drive Amps[3]	Motor HP[2]	Drive Amps[3]							
230 VAC	**Input Power Supply: Three-Phase 220-240 VAC**										
	2	7.0	1 1/2	5.5	EDP11S007DN3R01000	Yes	A[5]	ED1	36	**$9,284**	V1E (V1)
	3	10	2	8.0	EDP11S010DN3R01000	Yes	A[5]	ED1	36	**$9,350**	V1E (V1)
	5	13	3	11	EDP11S013DN3R01000	Yes	A[5]	ED1	41	**$9,449**	V1E (V1)
	5	16	5	13	EDP11S016DN3R01000	Yes	A[5]	ED1	42	**$9,681**	V1E (V1)
	7 1/2	24	7 1/2	20	EDP11S024DN3R01000	Yes	B[5]	ED1	56	**$10,222**	V1E (V1)
	10	28	10	24	EDP11S028DN3R01000	Yes	B[5]	ED1	56	**$10,965**	V1E (V1)
	10	33.5	10	28	EDP11S033DN3R01000	Yes	B[5]	ED1	56	**$11,665**	V1E (V1)
	15	45	15	36	EDP11S045DN3R01000	Yes	C[5]	ED2	88	**$12,885**	V1E (V1)
	20	54	20	45	EDP11S054DN3R01000	Yes	C[5]	ED2	90	**$14,163**	V1E (V1)
	25	70	20	56	EDP11S070DN3R01000	Yes	C[5]	ED2	100	**$14,925**	V1E (V1)
	30	86	25	70	EDP11S086DN3R01000	Yes	D[5]	ED3	230	**$17,083**	V1E (V1)
	40	105	30	86	EDP11S105DN3R01000	Yes	D[5]	ED3	240	**$20,101**	V1E (V1)
	50	142	40	115	EDP11S142DN3R01000	No	E[6]	ED4	300	**$22,730**	V1E (V1)
	60	180	50	142	EDP11S180DN3R01000	No	E[6]	ED4	300	**$28,053**	V1E (V1)
	75	211	60	180	EDP11S211DN3R01000	No	E[6]	ED4	300	**$31,262**	V1E (V1)
460 VAC	**Input Power Supply: Three-Phase 460-480 VAC**										
	2	3.6	2	3.6	EDP11S003GN3R01000	Yes	A[5]	ED1	36	**$9,104**	V1E (V1)
	3	5.0	3	5.0	EDP11S005GN3R01000	Yes	A[5]	ED1	36	**$9,220**	V1E (V1)
	5	7.0	3	5.5	EDP11S007GN3R01000	Yes	A[5]	ED1	41	**$9,284**	V1E (V1)
	7 1/2	10	5	10	EDP11S010GN3R01000	Yes	A[5]	ED1	42	**$9,350**	V1E (V1)
	10	13.5	7 1/2	11	EDP11S013GN3R01000	Yes	A[5]	ED1	42	**$9,449**	V1E (V1)
	10	17	10	13.5	EDP11S017GN3R01000	Yes	B[5]	ED1	56	**$9,863**	V1E (V1)
	15	24	10	19	EDP11S024GN3R01000	Yes	B[5]	ED1	56	**$10,415**	V1E (V1)
	20	31	15	25	EDP11S031GN3R01000	Yes	B[5]	ED1	56	**$11,174**	V1E (V1)
	25	38	20	33	EDP11S038GN3R01000	Yes	C[5]	ED2	90	**$11,888**	V1E (V1)
	30	45	25	38	EDP11S045GN3R01000	Yes	C[5]	ED2	104	**$13,132**	V1E (V1)
	40	58.5	30	47	EDP11S058GN3R01000	Yes	C[5]	ED2	110	**$14,436**	V1E (V1)
	50/60	70.5	40	61	EDP11S070GN3R01000	Yes	D[5]	ED3	240	**$15,214**	V1E (V1)
	75	88	50	73	EDP11S088GN3R01000	Yes	D[5]	ED3	245	**$17,416**	V1E (V1)
	75	105	75	88	EDP11S105GN3R01000	No	E[6]	ED4	300	**$20,496**	V1E (V1)
	100/125	142	75	115	EDP11S142GN3R01000	No	E[6]	ED4	300	**$23,178**	V1E (V1)
	150	180	100	142	EDP11S180GN3R01000	No	E[6]	ED4	300	**$28,610**	V1E (V1)
	175	211	125	180	EDP11S211GN3R01000	No	E[6]	ED4	300	**$31,885**	V1E (V1)
	200	242	150	211	EDP11S242GN3R01000	No	F[6]	ED6	700	**$46,456**	V1E (V1)
	250	312	200	242	EDP11S312GN3R01000	No	F[6]	ED6	720	**$50,911**	V1E (V1)
	300	370	250	312	EDP11S370GN3R01000	No	F[6]	ED6	750	**$53,540**	V1E (V1)
	400	477	300	370	EDP11S477GN3R01000	No	F[6]	ED6	775	**$60,381**	V1E (V1)
	450	515	400	477	EDP11S515GN3R01000	No	G[6]	ED8	1100	**$72,834**	V1E (V1)
	500	601	450	515	EDP11S601GN3R01000	No	G[6]	ED8	1120	**$78,686**	V1E (V1)
	600	720	500	560	EDP11S720GN3R01000	No	G[7]	ED8	1150	**$95,367**	V1E (V1)
	700	795	550	637	EDP11S795GN3R01000	No	H[7]	ED10	1700	**$117,338**	V1E (V1)
	750	877	600	715	EDP11S877GN3R01000	No	H[7]	ED10	1700	**$124,488**	V1E (V1)
	950	1062	750	855	EDP11S1062GN3R01000	No	H[7]	ED10	1850	**$143,748**	V1E (V1)
	1000	1141	800	943	EDP11S1141GN3R01000	No	H[7]	ED10	1850	**$155,203**	V1E (V1)

Notes:
1) CT (Constant Torque), 150% overload / 60 seconds; VT = Variable Torque (Quadratic Load), 110% overload / 60 seconds.
2) "HP" rating based on "average FLA values". Use as a guide only.
3) Motor FLA may vary with speed and manufacturer. ALWAYS compare motor FLA to nominal amps of drive.
4) ED1 - ED4 enclosures are non-ventilated and wall-mounted; ED6 - ED10 enclosures are ventilated and floor mounted.
5) Maximum 45°C ambient temperature without derating.
6) Maximum 40°C ambient temperature without derating.
7) Maximum 35°C ambient temperature without derating.
8) Dimensions and weights are for estimating purposes only. Only use "AS BUILT" drawings for construction.
For other technical data please refer to WEG product manual.

EDP11 panels highlighted in GREEN represent panels that are normally kept in stock.

EDP11 - ENGINEERED DRIVE PANEL

Engineered Drive Panel – NEMA 3R Enclosure with By-Pass and HOA / Pot / TB

Motor Voltage	ND / VT[1]		HD / CT[1]		Catalog Number	Braking Transistor	Drive Frame Size	Enclosure Frame Size[4]	Approx. Weight (lbs)[7]	List Price	Multiplier New (old)
	Motor HP[2]	Drive Amps[3]	Motor HP[2]	Drive Amps[3]							
230 VAC	Input Power Supply: Three-Phase 220-240 VAC										
	2	7.0	1 1/2	5.5	EDP11S007DN3R11000	Yes	A[5]	ED2	36	$10,794	V1E (V1)
	3	10	2	8.0	EDP11S010DN3R11000	Yes	A[5]	ED2	36	$10,870	V1E (V1)
	5	13	3	11	EDP11S013DN3R11000	Yes	A[5]	ED2	41	$10,969	V1E (V1)
	5	16	5	13	EDP11S016DN3R11000	Yes	A[5]	ED2	42	$11,201	V1E (V1)
	7 1/2	24	7 1/2	20	EDP11S024DN3R11000	Yes	B[5]	ED2	56	$11,820	V1E (V1)
	10	28	10	24	EDP11S028DN3R11000	Yes	B[5]	ED2	56	$12,757	V1E (V1)
	10	33.5	10	28	EDP11S033DN3R11000	Yes	B[5]	ED2	56	$13,568	V1E (V1)
	15	45	15	36	EDP11S045DN3R11000	Yes	C[5]	ED3	88	$14,987	V1E (V1)
	20	54	20	45	EDP11S054DN3R11000	Yes	C[5]	ED3	90	$16,410	V1E (V1)
	25	70	20	56	EDP11S070DN3R11000	Yes	C[5]	ED3	100	$17,620	V1E (V1)
	30	86	25	70	EDP11S086DN3R11000	Yes	D[5]	ED4	230	$19,778	V1E (V1)
	40	105	30	86	EDP11S105DN3R11000	Yes	D[5]	ED4	240	$22,989	V1E (V1)
	50	142	40	115	EDP11S142DN3R11000	No	E[6]	ED5	300	$27,715	V1E (V1)
	60	180	50	142	EDP11S180DN3R11000	No	E[6]	ED5	300	$34,048	V1E (V1)
	75	211	60	180	EDP11S211DN3R11000	No	E[6]	ED5	300	$38,587	V1E (V1)
460 VAC	Input Power Supply: Three-Phase 460-480 VAC										
	2	3.6	2	3.6	EDP11S003GN3R11000	Yes	A[5]	ED2	36	$10,614	V1E (V1)
	3	5.0	3	5.0	EDP11S005GN3R11000	Yes	A[5]	ED2	36	$10,730	V1E (V1)
	5	7.0	3	5.5	EDP11S007GN3R11000	Yes	A[5]	ED2	41	$10,794	V1E (V1)
	7 1/2	10	5	10	EDP11S010GN3R11000	Yes	A[5]	ED2	42	$10,870	V1E (V1)
	10	13.5	7 1/2	11	EDP11S013GN3R11000	Yes	A[5]	ED2	42	$10,969	V1E (V1)
	10	17	10	13.5	EDP11S017GN3R11000	Yes	B[5]	ED2	56	$11,461	V1E (V1)
	15	24	10	19	EDP11S024GN3R11000	Yes	B[5]	ED2	56	$12,207	V1E (V1)
	20	31	15	25	EDP11S031GN3R11000	Yes	B[5]	ED2	56	$13,077	V1E (V1)
	25	38	20	33	EDP11S038GN3R11000	Yes	C[5]	ED3	90	$13,873	V1E (V1)
	30	45	25	38	EDP11S045GN3R11000	Yes	C[5]	ED3	104	$15,233	V1E (V1)
	40	58.5	30	47	EDP11S058GN3R11000	Yes	C[5]	ED3	110	$16,683	V1E (V1)
	50/60	70.5	40	61	EDP11S070GN3R11000	Yes	D[5]	ED4	240	$17,909	V1E (V1)
	75	88	50	73	EDP11S088GN3R11000	Yes	D[5]	ED4	245	$20,304	V1E (V1)
	75	105	75	88	EDP11S105GN3R11000	No	E[6]	ED5	300	$23,840	V1E (V1)
	100/125	142	75	115	EDP11S142GN3R11000	No	E[6]	ED5	300	$28,163	V1E (V1)
	150	180	100	142	EDP11S180GN3R11000	No	E[6]	ED5	300	$34,605	V1E (V1)
	175	211	125	180	EDP11S211GN3R11000	No	E[6]	ED5	300	$39,210	V1E (V1)
	200	242	150	211	EDP11S242GN3R11000	No	F[6]	ED7	700	$59,035	V1E (V1)
	250	312	200	242	EDP11S312GN3R11000	No	F[6]	ED7	720	$65,054	V1E (V1)
	300	370	250	312	EDP11S370GN3R11000	No	F[6]	ED7	750	$67,943	V1E (V1)
	400	477	300	370	EDP11S477GN3R11000	No	F[6]	ED7	775	$82,414	V1E (V1)
	450	515	400	477	EDP11S515GN3R11000	No	G[6]	ED9	1100	$94,867	V1E (V1)
	500	601	450	515	EDP11S601GN3R11000	No	G[6]	ED9	1120	$106,258	V1E (V1)
	600	720	500	560	EDP11S720GN3R11000	No	G[7]	ED9	1150	$126,755	V1E (V1)

Notes:
1) CT (Constant Torque), 150% overload / 60 seconds; VT = Variable Torque (Quadratic Load), 110% overload / 60 seconds.
2) "HP" rating based on "average FLA values". Use as a guide only.
3) Motor FLA may vary with speed and manufacturer. ALWAYS compare motor FLA to nominal amps of drive.
4) ED1 - ED5 enclosures are non-ventilated and wall-mounted (ED5 - free standing); ED6 - ED9 enclosures are ventilated and floor mounted.
5) Maximum 45°C ambient temperature without derating.
6) Maximum 40°C ambient temperature without derating.
7) Maximum 35°C ambient temperature without derating.
8) Dimensions and weights are for estimating purposes only. Only use "AS BUILT" drawings for construction.
For other technical data please refer to WEG product manual.

Please refer to back cover for description of "NOTES"

For detailed specifications, data sheets, drawings and performance curves visit http:// www.weg.net

Data subject to change without notice.

Dimensions

Enclosure Frame Size

ED 1, 2, 3, 4

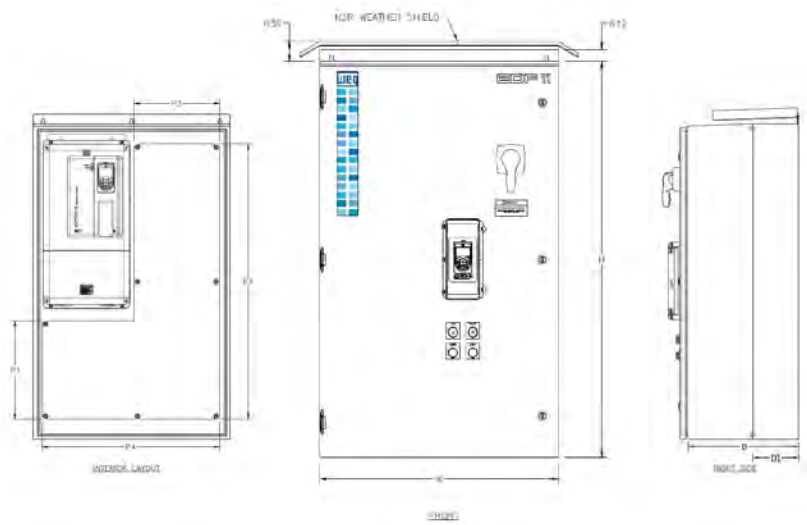

ED 5

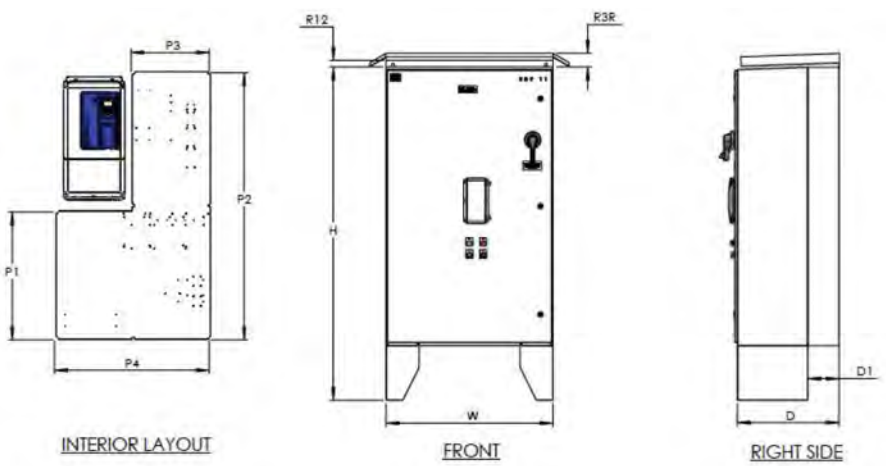

Frame[5]	H	W	D	D1	R3R[1]	R12[2]
ED1[4]	24	20	11.5	2.8	2.5	1.5
ED2[4]	30	24	14	5.4	2.5	1.5
ED3[4]	36	30	14	5.5	2.5	1.5
ED4[4]	48	30	17.5	6.8	2.5	1.5
ED5[3]	72	36	22	6.8	3	1.5

Notes:
1) For NEMA 3R cabinet.
2) For NEMA 12 cabinet.
3) ED5 "H" dimension includes 12 ft for legs.
4) ED1 - ED4 enclosures are non-ventilated and wall-mounted; ED5 enclosures are non-ventilated and floor mounted.
5) Dimensions are provided for estimating purposes only.

EDP11 - ENGINEERED DRIVE PANEL

Dimensions

Enclosure Frame Size

ED 6

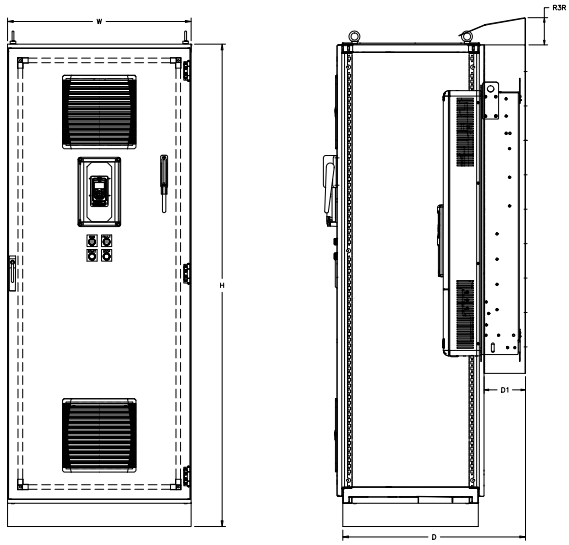

FRONT EXTERIOR VIEW

SIDE EXTERIOR VIEW

Frame[1]	H	W	D(N12)	D(N3R)	D1(N12)	D1(N3R)	R3R	N12
ED6	83	32	31.4	41	6.2	11.4	0.5	1.5
ED7	83	63	31.4	41	6.2	11.4	0.5	1.5
ED8	83	56	31.9	41	7.5	11.4	0.5	1.5
ED9	83	95	31.9	41	7.5	11.4	0.5	1.5
ED10	91	80	31.9	41	7.5	11.4	0.5	1.5

Notes:
1) ED6 - ED10 enclosures are ventilated and floor-mounted. Dimensions are provided for estimating purposes only.

ED 7, 8, 9, 10

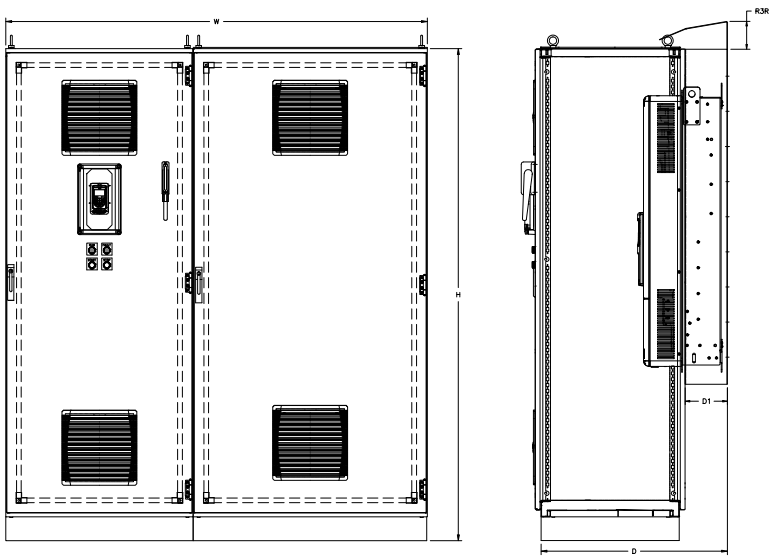

FRONT EXTERIOR VIEW

SIDE EXTERIOR VIEW

Please refer to back cover for description of “NOTES”

For detailed specifications, data sheets, drawings and performance curves visit http:// www.weg.net

Data subject to change without notice.

GPH2 Series – Combination Soft-Starters

The Combination Soft Starter is a NEMA 4 Enclosed industrial general purpose AC motor soft starter package. It is designed for simple and quick installation and start-up, requiring only input power and output motor connections.

The Combination Soft Starter is built to complement the ruggedness and reliability of WEG motors, providing a complete, simple, and cost effective AC motor starting and protection solution.

Standard Features

- Rated for 300% for 30 seconds
- Rated for 450% with derating
- 5 to 175 HP at 230V
- 10 to 350 HP at 460V
- Wall mounted enclosures for up to 125 HP at 230V; 250 HP at 460V
- Floor Mounted enclosure for up to 150 to 175 HP at 230V, and 300 to 350 HP at 460V
- Soft Starter
- SSW07 from 17 to 412A (all models with integrated AC1 by-pass)
- Circuit breaker with through door disconnect
- Control power transformer
- START/STOP pushbuttons
- RUN/FAULT pilot lights
- Hand-Off-Auto (HOA) selector switch
- SuperDrive G2 compatible

Optional Features

- AC3 by-pass contactor and DOL Selector Switch
- Door mounted keypad
- 575 VAC Supply
- SUSE Service Entrance Rated

Notes:
SSW07 models do not include keypad

Applications

- Centrifugal pumps
- Screw compressors
- Centrifugal fans
- Wood chipper
- Veneer lathe
- Saw
- Conveyor

GPH2 panels highlighted in GREEN on pages #385 - 388, represent panels that are normally kept in stock.

GHP2 - COMBINATION SOFT STARTER

GPH2 Catalog Number Sequence

GPH2	010	Q	C	2	0	0	0

Current Rating
005 = 5 HP
007 = 7.5 HP
010 = 10 HP
015 = 15 HP
025 = 25 HP
030 = 30 HP
050 = 40/50 HP
060 = 60 HP
075 = 75 HP
100 = 100 HP
125 = 125 HP
250 = 250 HP
350 = 350 HP

By-Pass
Q = Integral AC1 [1]
P = External AC3 [2]

Circuit Breaker
C = Circuit Breaker Included

Supply Voltage
2 = 200-240 VAC
4 = 460-480 VAC

Future Use

Options

Chart intended as reference only and not to create part numbers.
1) Bypass contactor is 'Run Rated' and is integral to the soft starter.
2) Bypass contactor is 'Full Rated' and mounted adjacent the soft starter inside the panel.

NEMA 4 Enclosure (Standard Version – with Circuit Breaker, Integral AC1 By-Pass and no Keypad on Door)

Motor Voltage	Motor HP[1]	Starter Amps[2]	Catalog Number	Frame Size	Approx. Weight[4] (lbs)	List Price	Multiplier New (old)
230 VAC	Input Power Supply: Three-Phase 200-240 VAC						
	5	17	GPH2005QC2000	1	140	$3,650	E1G (E1)
	7.5	24	GPH2007QC2000	1	140	$3,750	E1G (E1)
	10	30	GPH2010QC2000	1	140	$3,900	E1G (E1)
	15	45	GPH2015QC2000	2	150	$4,300	E1G (E1)
	25	61	GPH2025QC2000	2	150	$4,800	E1G (E1)
	30	85	GPH2030QC2000	2	150	$5,800	E1G (E1)
	50	130	GPH2050QC2000	3	280	$6,990	E1G (E1)
	60	171	GPH2060QC2000	3	280	$7,500	E1G (E1)
	75	200	GPH2075QC2000	3	280	$8,450	E1G (E1)
	100	255	GPH2100QC2000	4	415	$10,700	E1G (E1)
	125	312	GPH2125QC2000	4	415	$11,880	E1G (E1)
	150	365	GPH2150QC2000	5	610	$12,700	E1G (E1)
	175	412	GPH2175QC2000	5	610	$14,500	E1G (E1)
460 VAC	Input Power Supply: Three-Phase 460-480 VAC						
	10	17	GPH2010QC4000	1	140	$3,650	E1G (E1)
	15	24	GPH2015QC4000	1	140	$3,750	E1G (E1)
	20	30	GPH2020QC4000	1	140	$3,900	E1G (E1)
	30	45	GPH2030QC4000	2	150	$4,300	E1G (E1)
	40 / 50	61	GPH2050QC4000	2	150	$4,800	E1G (E1)
	75	85	GPH2075QC4000	2	150	$5,800	E1G (E1)
	100	130	GPH2100QC4000	3	280	$6,990	E1G (E1)
	125	171	GPH2125QC4000	3	280	$7,500	E1G (E1)
	150	200	GPH2150QC4000	3	280	$8,450	E1G (E1)
	200	255	GPH2200QC4000	4	415	$10,700	E1G (E1)
	250	312	GPH2250QC4000	4	415	$11,880	E1G (E1)
	300	365	GPH2300QC4000	5	610	$12,700	E1G (E1)
	350	412	GPH2350QC4000	5	610	$14,500	E1G (E1)

Notes:
1) "HP" rating based on FLA values from WEG W22, 2- and 4-pole, NEMA premium motors.
2) Motor FLA may vary with speed and manufacturer. ALWAYS compare motor FLA to nominal amps of the starter.
3) For other technical data please refer to WEG product manual.
4) Dimensions and weights are for estimating purposes only. Only use "AS BUILT" drawings for construction.

GPH2 panels highlighted in GREEN represent panels that are normally kept in stock.

GHP2 - COMBINATION SOFT STARTER

NEMA 4 Enclosure (with Circuit Breaker, Integral AC1 By-Pass and Keypad on Door)

Motor Voltage	Motor HP[1]	Starter Amps[2]	Catalog Number	Frame Size	Approx. Weight[4] (lbs)	List Price	Multiplier New (old)
230 VAC	Input Power Supply: Three-Phase 200-240 VAC						
	5	17	GPH2005QC2001	1	140	$4,145	E1G (E1)
	7.5	24	GPH2007QC2001	1	140	$4,245	E1G (E1)
	10	30	GPH2010QC2001	1	140	$4,395	E1G (E1)
	15	45	GPH2015QC2001	2	150	$4,795	E1G (E1)
	25	61	GPH2025QC2001	2	150	$5,295	E1G (E1)
	30	85	GPH2030QC2001	2	150	$6,295	E1G (E1)
	50	130	GPH2050QC2001	3	280	$7,485	E1G (E1)
	60	171	GPH2060QC2001	3	280	$7,995	E1G (E1)
	75	200	GPH2075QC2001	3	280	$8,945	E1G (E1)
	100	255	GPH2100QC2001	4	415	$11,195	E1G (E1)
	125	312	GPH2125QC2001	4	415	$12,375	E1G (E1)
	150	365	GPH2150QC2001	5	610	$13,195	E1G (E1)
	175	412	GPH2175QC2001	5	610	$14,995	E1G (E1)
460 VAC	Input Power Supply: Three-Phase 460-480 VAC						
	10	17	GPH2010QC4001	1	140	$4,145	E1G (E1)
	15	24	GPH2015QC4001	1	140	$4,245	E1G (E1)
	20	30	GPH2020QC4001	1	140	$4,395	E1G (E1)
	30	45	GPH2030QC4001	2	150	$4,795	E1G (E1)
	40 / 50	61	GPH2050QC4001	2	150	$5,295	E1G (E1)
	75	85	GPH2075QC4001	2	150	$6,295	E1G (E1)
	100	130	GPH2100QC4001	3	280	$7,485	E1G (E1)
	125	171	GPH2125QC4001	3	280	$7,995	E1G (E1)
	150	200	GPH2150QC4001	3	280	$8,945	E1G (E1)
	200	255	GPH2200QC4001	4	415	$11,195	E1G (E1)
	250	312	GPH2250QC4001	4	415	$12,375	E1G (E1)
	300	365	GPH2300QC4001	5	610	$13,195	E1G (E1)
	350	412	GPH2350QC4001	5	610	$14,995	E1G (E1)

Notes:
1) "HP" rating based on FLA values from WEG W22, 2- and 4-pole, NEMA premium motors.
2) Motor FLA may vary with speed and manufacturer. ALWAYS compare motor FLA to nominal amps of the starter.
3) For other technical data please refer to WEG product manual.
4) Dimensions and weights are for estimating purposes only. Only use "AS BUILT" drawings for construction.

GPH2 panels highlighted in GREEN represent panels that are normally kept in stock.

Please refer to back cover for description of "NOTES"

Data subject to change without notice.

NEMA 4 Enclosure (with Circuit Breaker, External AC3 By-Pass and no Keypad on Door)

Motor Voltage	Motor HP[1]	Starter Amps[2]	Catalog Number	Frame Size	Approx. Weight[4] (lbs)	List Price	Multiplier New (old)
230 VAC	Input Power Supply: Three-Phase 200-240 VAC						
	5	17	GPH2005PC2000	1	140	$3,900	E1G (E1)
	7.5	24	GPH2007PC2000	1	140	$4,032	E1G (E1)
	10	30	GPH2010PC2000	1	140	$4,243	E1G (E1)
	15	45	GPH2015PC2000	2	150	$4,865	E1G (E1)
	25	61	GPH2025PC2000	2	150	$5,412	E1G (E1)
	30	85	GPH2030PC2000	2	150	$6,585	E1G (E1)
	50	130	GPH2050PC2000	3	280	$8,260	E1G (E1)
	60	171	GPH2060PC2000	3	280	$9,013	E1G (E1)
	75	200	GPH2075PC2000	3	280	$10,350	E1G (E1)
	100	255	GPH2100PC2000	4	415	$12,965	E1G (E1)
	125	312	GPH2125PC2000	4	415	$14,847	E1G (E1)
	150	365	GPH2150PC2000	5	610	$15,706	E1G (E1)
	175	412	GPH2175PC2000	5	610	$21,075	E1G (E1)
460 VAC	Input Power Supply: Three-Phase 460-480 VAC						
	10	17	GPH2010PC4000	1	140	$3,900	E1G (E1)
	15	24	GPH2015PC4000	1	140	$4,032	E1G (E1)
	20	30	GPH2020PC4000	1	140	$4,243	E1G (E1)
	30	45	GPH2030PC4000	2	150	$4,865	E1G (E1)
	40 / 50	61	GPH2050PC4000	2	150	$5,412	E1G (E1)
	75	85	GPH2075PC4000	2	150	$6,585	E1G (E1)
	100	130	GPH2100PC4000	3	280	$8,260	E1G (E1)
	125	171	GPH2125PC4000	3	280	$9,013	E1G (E1)
	150	200	GPH2150PC4000	3	280	$10,350	E1G (E1)
	200	255	GPH2200PC4000	4	415	$12,965	E1G (E1)
	250	312	GPH2250PC4000	4	415	$14,847	E1G (E1)
	300	365	GPH2300PC4000	5	610	$15,706	E1G (E1)
	350	412	GPH2350PC4000	5	610	$21,075	E1G (E1)

Notes:
1) "HP" rating based on FLA values from WEG W22, 2- and 4-pole, NEMA premium motors.
2) Motor FLA may vary with speed and manufacturer. ALWAYS compare motor FLA to nominal amps of the starter.
3) For other technical data please refer to WEG product manual.
4) Dimensions and weights are for estimating purposes only. Only use "AS BUILT" drawings for construction.

GPH2 panels highlighted in GREEN represent panels that are normally kept in stock.

GHP2 - COMBINATION SOFT STARTER

NEMA 4 Enclosure (with Circuit Breaker, External AC3 By-Pass and Keypad on Door)

Motor Voltage	Motor HP[1]	Starter Amps[2]	Catalog Number	Frame Size	Approx. Weight[4] (lbs)	List Price	Multiplier New (old)
230 VAC	Input Power Supply: Three-Phase 200-240 VAC						
	5	17	GPH2005PC2001	1	140	$4,395	E1G (E1)
	7.5	24	GPH2007PC2001	1	140	$4,527	E1G (E1)
	10	30	GPH2010PC2001	1	140	$4,738	E1G (E1)
	15	45	GPH2015PC2001	2	150	$5,360	E1G (E1)
	25	61	GPH2025PC2001	2	150	$5,907	E1G (E1)
	30	85	GPH2030PC2001	2	150	$7,080	E1G (E1)
	50	130	GPH2050PC2001	3	280	$8,755	E1G (E1)
	60	171	GPH2060PC2001	3	280	$9,508	E1G (E1)
	75	200	GPH2075PC2001	3	280	$10,845	E1G (E1)
	100	255	GPH2100PC2001	4	415	$13,460	E1G (E1)
	125	312	GPH2125PC2001	4	415	$15,342	E1G (E1)
	150	365	GPH2150PC2001	5	610	$16,201	E1G (E1)
	175	412	GPH2175PC2001	5	610	$21,570	E1G (E1)
460 VAC	Input Power Supply: Three-Phase 460-480 VAC						
	10	17	GPH2010PC4001	1	140	$4,395	E1G (E1)
	15	24	GPH2015PC4001	1	140	$4,527	E1G (E1)
	20	30	GPH2020PC4001	1	140	$4,738	E1G (E1)
	30	45	GPH2030PC4001	2	150	$5,360	E1G (E1)
	40 / 50	61	GPH2050PC4001	2	150	$5,907	E1G (E1)
	75	85	GPH2075PC4001	2	150	$7,080	E1G (E1)
	100	130	GPH2100PC4001	3	280	$8,755	E1G (E1)
	125	171	GPH2125PC4001	3	280	$9,508	E1G (E1)
	150	200	GPH2150PC4001	3	280	$10,845	E1G (E1)
	200	255	GPH2200PC4001	4	415	$13,460	E1G (E1)
	250	312	GPH2250PC4001	4	415	$15,342	E1G (E1)
	300	365	GPH2300PC4001	5	610	$16,201	E1G (E1)
	350	412	GPH2350PC4001	5	610	$21,570	E1G (E1)

Notes:
1) "HP" rating based on FLA values from WEG W22, 2- and 4-pole, NEMA premium motors.
2) Motor FLA may vary with speed and manufacturer. ALWAYS compare motor FLA to nominal amps of the starter.
3) For other technical data please refer to WEG product manual.
4) Dimensions and weights are for estimating purposes only. Only use "AS BUILT" drawings for construction.

GPH2 panels highlighted in GREEN represent panels that are normally kept in stock.

Please refer to back cover for description of "NOTES"

Dimensions

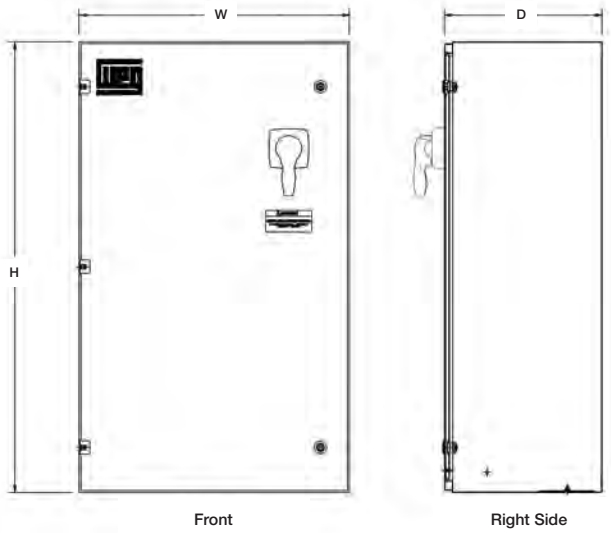

Frame Sizes 1-4

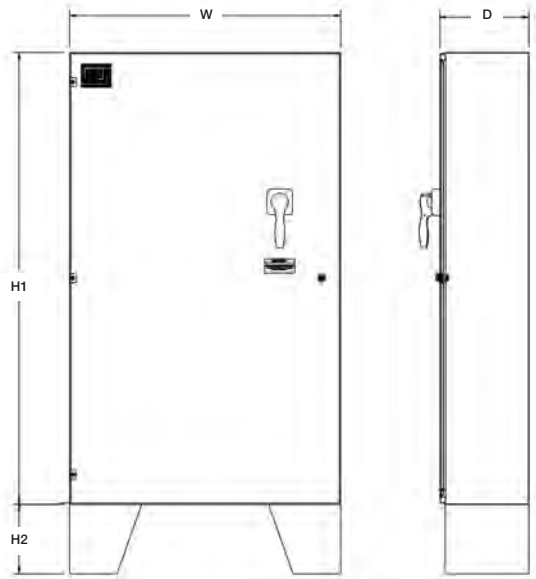

Frame Sizes 5

GPH Dimensions [1]

Frame	W	D	H/H1	H2	Approx. Weight (lbs)
1	16	8	24	N/A	140
2	24	12	32	N/A	150
3	24	14	40	N/A	280
4	32	16	48	N/A	415
5	36	16	60	12	610

Notes:
1) H1 + H2 = overall height

Enclosed Starters Series

Operation and Protection of Motors up to 600 HP at 460 VAC (800A)

WEG Enclosed Starters Series were designed to meet the requirements and flexibility frequently demanded in industrial applications. Featuring components that meet IEC design standards and UL horsepower ratings, WEG enclosed starters are UL508A approved and cULus certified. This means your panels will fulfill the rigorous requirements of UL508A and will have the quality and performance as for all WEG products.

Standard or Custom

By having most of the processes in WEG facilities, we can manufacture not only the enclosed starters listed on this catalog, but also any other custom panel your application may require. Our engineers will work together with you to provide the perfect solution for your application.

Perfect Solution

WEG offers options for both: Full Voltage Non-Reversing Non-Combination Starters and Full Voltage Non-Reversing Combination Starters up to 250 HP at 460 VAC.

WEG's UL508A panel shops can manufacture any configuration of Non-Combination or Combination Starters for any low voltage horsepower ratings. Some examples are listed below:

- Enclosed contactors
- Full voltage reversing starters
- Reduced voltage magnetic starters (part-winding, wye-delta)
- Reduced voltage solid-state starters
- Multi-speed starters
- Explosion proof starters

Whenever you need a reliable product to control and protect your application, WEG field specialists can help you find the best solution.

New Concepts

Smaller size components allow selection of smaller enclosures which translates to cost savings. A wide range of ratings and frames allow the components to be more closely matched to your application. Our overload relays provide phase loss sensitivity, ambient temperature compensated for -4°F to +140°F (eliminating the need for additional heaters), and automatic reset for remote applications.

A wide range of industrial applications are covered: Pumps, Industrial Washing Machines, Compressors, Blowers, Cutting Machines, Conveyors, Lumber Processing and many others.

Please refer to back cover for description of "NOTES"

For detailed specifications, data sheets, drawings and performance curves visit http:// www.weg.net

Data subject to change without notice.

Product Line Overview

Non-Combination Starters

Model		ESW	PESW	ESWX-M16	ESWX-M	ESWX
Maximum horsepower rating at 460 VAC 60 Hz	HP	75	75	10	75	75
Maximum rated current Imax (Iu)	A	105	105	16	100	105
Rated operational voltage	V	600	600	600	600	600
Enclosure type		Metallic Type 1	Non-Metallic Type 4X	Cast Aluminum NEMA 7/9 NEMA 4X	Cast Aluminum Type 7/9	Cast Aluminum Type 7/9
Protections Provided						
Motor disconnect				✓	✓	
Motor branch short-circuit				✓	✓	
Motor controller		✓	✓	✓	✓	✓
Motor overload		✓	✓	✓	✓	✓

Product Line Overview

Combination Starters

Model		ESWC	ESWE
Maximum horsepower rating at 460 VAC 60 Hz	HP	250	20
Maximum rated current Imax (Iu)	A	300	32
Rated operational voltage	V	600	600
Enclosure type		Metallic Type 1 Type 3R Type 4 / 12	Non-Metallic Type 4X
Protections Provided			
Motor disconnect		✓	✓
Motor branch short-circuit		✓	✓
Motor controller		✓	✓
Motor overload		✓	✓

Please refer to back cover for description of “NOTES”

For detailed specifications, data sheets, drawings and performance curves visit http:// www.weg.net

Data subject to change without notice.

ESW/PESW Series – Non-Combination Starters

WEG offers non-reversing and non-combination magnetic starters up to 75 HP at 460 VAC (105 A). Featuring WEG contactors and overload relays, the magnetic starters are ideal to protect and operate motors, ensuring smooth operation year-after year. The ESW series starters are housed in a metallic Type 1 enclosure and the PESW series are enclosed in a non-metallic Type 4X housing.

WEG ESW and PESW starters are pre-wired from the factory and recommended for all single- and three-phase applications where magnetic starters can be applied.

Standard Features

- High horsepower ratings in four compact sizes
- Fast acceleration and high initial torque
- Bimetallic overload relays – class 10
- Adjustable trip current
- Ambient temperature compensated
- Phase-loss sensitivity protection
- Selectable manual or automatic RESET
- Electrically isolated NO and NC auxiliary contacts
- Easy to install and setup

UL File No. E202315

ESW Catalog Number Sequence

ESW	(*)	-	B	18	D15	A	-	R32

ESW Enclosed Starter Non-Combination NEMA1
Blank: Three-Phase
S: Single-Phase

Contactor Series
Blank: CWM
B: CWB

Contactor Frame Size
9: 9A
12: 12A
18: 18A
25: 25A
32: 32A
38: 38A
40: 40A
50: 50A
65: 65A
80: 80A
95: 95A
105: 105A

Coil Voltage
CWB Contactor:
D15: 120 VAC
V24: 208-240 VAC
D39: 480 VAC
CWM Contactor:
V18: 120 VAC
V24: 208-240 VAC
V47: 480 VAC

Control Devices
A: START STOP + RESET
C: ON OFF Selector Switch + RESET
E: RESET Only
H: HOA + RESET

Overload Current Setting

Three-Phase	Range	Single-Phase
R23	0.8 - 1.2A	RM23
R24	1.2 - 1.8A	RM24
R25	1.8 - 2.8A	RM25
R26	2.8 - 4A	RM26
R27	4 - 6.3A	RM27
R28	5.6 - 8A	RM28
R29	7 - 10A	RM29
R30	8 - 12.5A	RM30
R32	11 - 17A	RM32
R33	15 - 23A	RM33
R34	22 - 32A	RM34
R35	32 - 40A	RM35
R70	25 - 40A	RM70
R71	32 - 50A	RM71
R72	40 - 57A	
R73	50 - 63A	
R74	57 - 70A	
R75	63 - 80A	
R43	63 - 80A	
R44	75 - 97A	
R45	90 - 112A	

Chart intended as reference only and not to create part numbers.

NEMA 1 Enclosure – Three Phase

ESW Series – Non-combination Across The Line Starter
Three-Phase – Enclosure Type-1

Max UL Horsepower				Box	Setting Range (A)	Coil Voltage (V)	RESET Only		START STOP + RESET		Multiplier New (Old)
200V	230V	460V	575V				Catalog Number	List Price	Catalog Number	List Price	
-	-	1/2	1/2	M04	0.8 - 1.2	120	ESW-B9D15E-R23	$157	ESW-B9D15A-R23	$210	Z3E (Z3)
						208-240	ESW-B9V24E-R23		ESW-B9V24A-R23		
						480	ESW-B9D39E-R23		ESW-B9D39A-R23		
-	-	3/4	1	M04	1.2 - 1.8	120	ESW-B9D15E-R24	$157	ESW-B9D15A-R24	$210	
						208-240	ESW-B9V24E-R24		ESW-B9V24A-R24		
						480	ESW-B9D39E-R24		ESW-B9D39A-R24		
1/2	1/2	1	2	M04	1.8 - 2.8	120	ESW-B9D15E-R25	$157	ESW-B9D15A-R25	$210	
						208-240	ESW-B9V24E-R25		ESW-B9V24A-R25		
						480	ESW-B9D39E-R25		ESW-B9D39A-R25		
3/4	3/4	2	3	M04	2.8 - 4.0	120	ESW-B9D15E-R26	$157	ESW-B9D15A-R26	$210	
						208-240	ESW-B9V24E-R26		ESW-B9V24A-R26		
						480	ESW-B9D39E-R26		ESW-B9D39A-R26		
1	1 1/2	3	5	M04	4.0 - 6.3	120	ESW-B9D15E-R27	$157	ESW-B9D15A-R27	$210	
						208-240	ESW-B9V24E-R27		ESW-B9V24A-R27		
						480	ESW-B9D39E-R27		ESW-B9D39A-R27		
2	2	5	5	M04	5.6 - 8.0	120	ESW-B9D15E-R28	$157	ESW-B9D15A-R28	$210	
						208-240	ESW-B9V24E-R28		ESW-B9V24A-R28		
						480	ESW-B9D39E-R28		ESW-B9D39A-R28		
2	3	5	7 1/2	M04	7.0 - 10	120	ESW-B9D15E-R29	$157	ESW-B9D15A-R29	$210	
						208-240	ESW-B9V24E-R29		ESW-B9V24A-R29		
						480	ESW-B9D39E-R29		ESW-B9D39A-R29		
3	3	7 1/2	10	M04	8.0 - 12.5	120	ESW-B12D15E-R30	$174	ESW-B12D15A-R30	$227	
						208-240	ESW-B12V24E-R30		ESW-B12V24A-R30		
						480	ESW-B12D39E-R30		ESW-B12D39A-R30		
3	5	10	15	M04	11 - 17	120	ESW-B18D15E-R32	$188	ESW-B18D15A-R32	$241	
						208-240	ESW-B18V24E-R32		ESW-B18V24A-R32		
						480	ESW-B18D39E-R32		ESW-B18D39A-R32		
5	7 1/2	15	15	M04	15 - 23	120	ESW-B25D15E-R33	$223	ESW-B25D15A-R33	$276	
						208-240	ESW-B25V24E-R33		ESW-B25V24A-R33		
						480	ESW-B25D39E-R33		ESW-B25D39A-R33		
10	10	20	25	M04	22 - 32	120	ESW-B32D15E-R34	$245	ESW-B32D15A-R34	$298	
						208-240	ESW-B32V24E-R34		ESW-B32V24A-R34		
						480	ESW-B32D39E-R34		ESW-B32D39A-R34		
10	-	25	-	M04	32 - 40	120	ESW-B38D15E-R35	$292	ESW-B38D15A-R35	$345	
						208-240	ESW-B38V24E-R35		ESW-B38V24A-R35		
						480	ESW-B38D39E-R35		ESW-B38D39A-R35		
10	10	20	25	M06	25 - 40	120	ESW-B40D15E-R70	$336	ESW-B40D15A-R70	$385	
						208-240	ESW-B40V24E-R70		ESW-B40V24A-R70		
						480	ESW-B40D39E-R70		ESW-B40D39A-R70		
10	15	30	40	M06	32 - 50	120	ESW-B50D15E-R71	$350	ESW-B50D15A-R71	$403	
						208-240	ESW-B50V24E-R71		ESW-B50V24A-R71		
						480	ESW-B50D39E-R71		ESW-B50D39A-R71		
15	20	40	50	M06	40 - 57	120	ESW-B65D15E-R72	$375	ESW-B65D15A-R72	$428	
						208-240	ESW-B65V24E-R72		ESW-B65V24A-R72		
						480	ESW-B65D39E-R72		ESW-B65D39A-R72		
15	20	40	50	M06	50 - 63	120	ESW-B65D15E-R73	$400	ESW-B65D15A-R73	$450	
						208-240	ESW-B65V24E-R73		ESW-B65V24A-R73		
						480	ESW-B65D39E-R73		ESW-B65D39A-R73		
20	25	50	-	M06	57 - 70	120	ESW-B80D15E-R74	$421	ESW-B80D15A-R74	$474	
						208-240	ESW-B80V24E-R74		ESW-B80V24A-R74		
						480	ESW-B80D39E-R74		ESW-B80D39A-R74		
-	25	50	-	M06	63 - 80	120	ESW-B80D15E-R75	$448	ESW-B80D15A-R75	$498	
						208-240	ESW-B80V24E-R75		ESW-B80V24A-R75		
						480	ESW-B80D39E-R75		ESW-B80D39A-R75		
25	30	60	75	M08	63 - 80	120	ESW-95V18E-R43	$876	ESW-95V18A-R43	$929	
						208-240	ESW-95V24E-R43		ESW-95V24A-R43		
						480	ESW-95V47E-R43		ESW-95V47A-R43		
30	30	75	75	M08	75 - 97	120	ESW-105V18E-R44	$975	ESW-105V18A-R44	$1,028	
						208-240	ESW-105V24E-R44		ESW-105V24A-R44		
						480	ESW-105V47E-R44		ESW-105V47A-R44		
30	40	75	-	M08	90 - 112	120	ESW-105V18E-R45	$975	ESW-105V18A-R45	$1,028	
						208-240	ESW-105V24E-R45		ESW-105V24A-R45		
						480	ESW-105V47E-R45		ESW-105V47A-R45		

Notes:
- *3-Phase starters can be wired for single-phase applications (see page 291 for single-phase conversion diagram).*

Please refer to back cover for description of "NOTES"

For detailed specifications, data sheets, drawings and performance curves visit http://www.weg.net

Enclosed Starters - ESWS

NEMA 1 Enclosure – Single Phase

ESWS Series – Non-combination Across The Line Starter – Non Reversing Single-Phase – Enclosure Type-1

Max UL Horsepower 115V	Max UL Horsepower 230V	Box	Setting Range (A)	Coil Voltage (V)	RESET only Catalog Number	RESET only List Price	START STOP + RESET Catalog Number	START STOP + RESET List Price	Multiplier New (Old)
_	_	M04	0.8 - 1.2	120	ESWS-B9D15E-RM23	$135	ESWS-B9D15A-RM23	$188	Z3E (Z3)
				208-240	ESWS-B9V24E-RM23		ESWS-B9V24A-RM23		
_	1/10	M04	1.2 - 1.8	120	ESWS-B9D15E-RM24	$135	ESWS-B9D15A-RM24	$188	
				208-240	ESWS-B9V24E-RM24		ESWS-B9V24A-RM24		
_	1/6	M04	1.8 - 2.8	120	ESWS-B9D15E-RM25	$135	ESWS-B9D15A-RM25	$188	
				208-240	ESWS-B9V24E-RM25		ESWS-B9V24A-RM25		
1/8	1/3	M04	2.8 - 4.0	120	ESWS-B9D15E-RM26	$135	ESWS-B9D15A-RM26	$188	
				208-240	ESWS-B9V24E-RM26		ESWS-B9V24A-RM26		
1/4	1/2	M04	4.0 - 6.3	120	ESWS-B9D15E-RM27	$135	ESWS-B9D15A-RM27	$188	
				208-240	ESWS-B9V24E-RM27		ESWS-B9V24A-RM27		
1/3	1	M04	5.6 - 8.0	120	ESWS-B9D15E-RM28	$135	ESWS-B9D15A-RM28	$188	
				208-240	ESWS-B9V24E-RM28		ESWS-B9V24A-RM28		
1/2	1 1/2	M04	7.0 - 10	120	ESWS-B9D15E-RM29	$135	ESWS-B9D15A-RM29	$188	
				208-240	ESWS-B9V24E-RM29		ESWS-B9V24A-RM29		
1/2	2	M04	8.0 - 12.5	120	ESWS-B12D15E-RM30	$161	ESWS-B12D15A-RM30	$214	
				208-240	ESWS-B12V24E-RM30		ESWS-B12V24A-RM30		
3/4	2	M04	10 - 15	120	ESWS-B18D15E-RM31	$170	ESWS-B18D15A-RM31	$223	
				208-240	ESWS-B18V24E-RM31		ESWS-B18V24A-RM31		
1	3	M04	11 - 17	120	ESWS-B18D15E-RM32	$170	ESWS-B18D15A-RM32	$223	
				208-240	ESWS-B18V24E-RM32		ESWS-B18V24A-RM32		
1 1/2	3	M04	15 - 23	120	ESWS-B25D15E-RM33	$180	ESWS-B25D15A-RM33	$233	
				208-240	ESWS-B25V24E-RM33		ESWS-B25V24A-RM33		
2	5	M04	22 - 32	120	ESWS-B32D15E-RM34	$230	ESWS-B32D15A-RM34	$276	
				208-240	ESWS-B32V24E-RM34		ESWS-B32V24A-RM34		
3	7 1/2	M04	32 - 40	120	ESWS-B38D15E-RM35	$274	ESWS-B38D15A-RM35	$327	
				208-240	ESWS-B38V24E-RM35		ESWS-B38V24A-RM35		
3	7 1/2	M06	25 - 40	120	ESWS-B40D15E-RM70	$312	ESWS-B40D15A-RM70	$394	
				208-240	ESWS-B40V24E-RM70		ESWS-B40V24A-RM70		
3	10	M06	32 - 50	120	ESWS-B50D15E-RM71	$330	ESWS-B50D15A-RM71	$423	
				208-240	ESWS-B50V24E-RM71		ESWS-B50V24A-RM71		

Notes:
- *OLR must be set at 115% of motor FLA.*
- *ESWS – Single-phase version – assembled with 2-pole contactor and 2-pole overload relays.*

Please refer to back cover for description of "NOTES"

Data subject to change without notice.

Field Mod Kits for ESW/ESWS Series

Accessories	Field Kit Medications				
Description	Structure		Catalog Number	List Price	Multiplier New (Old)
	Top	Bottom			
No pilot device metal brackets – 2 x 22 mm holes w/plugs	PLUG	PLUG	KESWPP	$25	Z3E (Z3)
START STOP pushbutton	PLUG	START - STOP	KESWPS	$80	
HAND-OFF-AUTO selector switch	HAND - OFF - AUTO	PLUG	KESWHP	$80	
OFF-ON selector switch	OFF - ON	PLUG	KESWFP	$80	
E-STOP	PLUG	E-STOP	KESWPE	$80	

KESWPP

KESWPS

KESWHP

KESWFP

Wiring Diagram

Single-Phase Starter

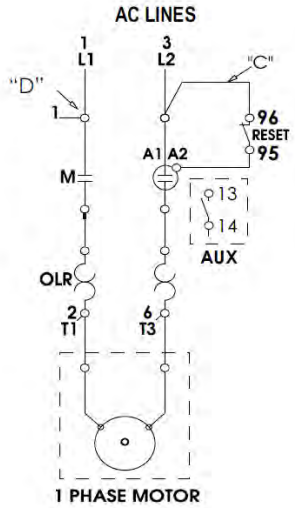

Three-Phase Starter

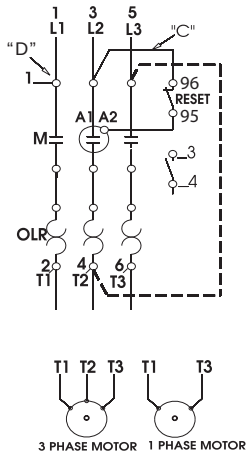

Conversion to single-phase, add jumper wire from L3 to T2 (follow dotted line connection above)

Separate Control

For separate control, remove wires "C" and "D" if supplied and connect separate control lines to terminal Nº 96 on the overload relay and to terminal Nº _3 on the auxiliary Contact block (for 3-wire control) or to the contactor coil Nº A1 (for 2-wire control).

Pilot Devices

2-Wire Control

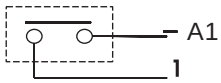

NOT FOR USE WITH AUTO RESET OL RELAYS.

3-Wire Control

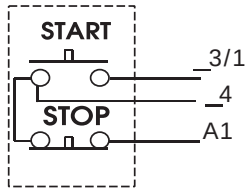

Hand-Off-Auto Wire Control (for ESW series only)

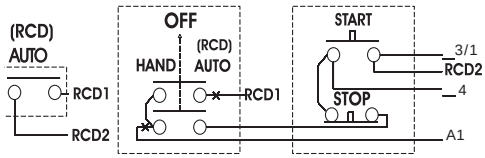

Dimensions

Provision for Cable Gland Fitting	Standard			
	Top	Bottom	Side	Back
Box M04	2x (1/2" or 3/4")	2x (1/2" or 3/4")	4x (1/2" or 3/4")	2x (1/2" or 3/4")
	1x (3/4" or 1")	1x (3/4" or 1")	-	-
Box M06	1x (1/2" or 3/4")	1x (1/2" or 3/4")	3x (1/2" or 3/4")	-
	2x (1" or 1 1/4")	2x (1" or 1 1/4")	4x (1" or 1 1/4")	-
Box M08	1x (1")	1x (1")	1x (1")	1x (1")
	1x (1 1/2")	1x (1 1/2")	4x (3/4")	-

Dimensions (approx. inches)				
Enclosed Starters	Enclosure Size			
	BOX	H	W	D
ESW(S)-B9, B12, B18, B25, B32, B38	M04	9.5	5.5	5.0
ESW(S)-B40, B50, B65, B80	M06	13.0	7.5	5.6
ESW 95, 105	M08	17.8	9.5	6.7

Please refer to back cover for description of "NOTES"

For detailed specifications, data sheets, drawings and performance curves visit http:// www.weg.net

Data subject to change without notice.

PESW Catalog Number Sequence

PESW	(*)	-	B	18	D15	AX	-	R32

PESW Enclosed Starter Non-Combination NEMA4X
Blank: Three-Phase
S: Single-Phase

Contactor Series
Blank: CWM
B: CWB

Contactor Frame Size
9: 9A
12: 12A
18: 18A
25: 25A
32: 32A
38: 38A
40: 40A
50: 50A
65: 65A
80: 80A
95: 95A
105: 105A

Coil Voltage
CWB Contactor:
D15: 120 VAC
V24: 208-240 VAC
D39: 480 VAC
CWM Contactor:
V18: 120 VAC
V24: 208-240 VAC
V47: 480 VAC

Control Devices
AX: START STOP + RESET
ACX: START STOP + HOA + RESET
AB1X: START STOP + Indicator
ECX: HOA + RESET
EX: RESET Only
EFX: ON/OFF Selector + RESET
ICX: HOA, No Reset
IFX: ON/OFF Switch, No Reset

Overload Current Setting

Three-Phase	Range	Single-Phase
R57	0.8 - 1.2 A	RM57
R58	1.2 - 1.8A	RM58
R59	1.8 - 2.8A	RM59
R60	2.8 - 4A	RM60
R61	4 - 6.3A	RM61
R62	5.6 - 8A	RM62
R63	7 - 10A	RM63
R64	8 - 12.5A	RM64
R66	11 - 17A	RM66
R67	15 - 23A	RM67
R68	22 - 32A	RM68
R69	32 - 40A	RM69
R70	25 - 40A	RM70
R71	32 - 50A	RM71
R72	40 - 57A	RM72
R73	50 - 63A	RM73
R74	57 - 70A	RM74
R75	63 - 80A	RM75
R43	63 - 80A	RM43
R44	75 - 97A	RM44
R45	90 - 112A	RM45

Chart intended as reference only and not to create part numbers.

PESW

PESW Series – Non-Combination Across the Line Starter

Three-Phase Enclosure Type 4X

Max UL Horsepower				Box	Setting Range (A)	Coil Voltage (V)	RESET only		START STOP + RESET		Multiplier New (Old)
200V	230V	460V	575V				Catalog Number	List Price	Catalog Number	List Price	
-	-	1/2	1/2	05	0.8 - 1.2	120	PESW-B9D15EX-R57	$157	PESW-B9D15AX-R57	$210	Z3P (Z3)
						208-240	PESW-B9V24EX-R57		PESW-B9V24AX-R57		
						480	PESW-B9D39EX-R57		PESW-B9D39AX-R57		
-	-	3/4	1	05	1.2 - 1.8	120	PESW-B9D15EX-R58	$157	PESW-B9D15AX-R58	$210	
						208-240	PESW-B9V24EX-R58		PESW-B9V24AX-R58		
						480	PESW-B9D39EX-R58		PESW-B9D39AX-R58		
1/2	1/2	1	2	05	1.8 - 2.8	120	PESW-B9D15EX-R59	$157	PESW-B9D15AX-R59	$210	
						208-240	PESW-B9V24EX-R59		PESW-B9V24AX-R59		
						480	PESW-B9D39EX-R59		PESW-B9D39AX-R59		
3/4	3/4	2	3	05	2.8 - 4.0	120	PESW-B9D15EX-R60	$157	PESW-B9D15AX-R60	$210	
						208-240	PESW-B9V24EX-R60		PESW-B9V24AX-R60		
						480	PESW-B9D39EX-R60		PESW-B9D39AX-R60		
1	1 1/2	3	5	05	4.0 - 6.3	120	PESW-B9D15EX-R61	$157	PESW-B9D15AX-R61	$210	
						208-240	PESW-B9V24EX-R61		PESW-B9V24AX-R61		
						480	PESW-B9D39EX-R61		PESW-B9D39AX-R61		
2	2	5	5	05	5.6 - 8.0	120	PESW-B9D15EX-R62	$157	PESW-B9D15AX-R62	$210	
						208-240	PESW-B9V24EX-R62		PESW-B9V24AX-R62		
						480	PESW-B9D39EX-R62		PESW-B9D39AX-R62		
2	3	5	7 1/2	05	7.0 - 10	120	PESW-B9D15EX-R63	$157	PESW-B9D15AX-R63	$210	
						208-240	PESW-B9V24EX-R63		PESW-B9V24AX-R63		
						480	PESW-B9D39EX-R63		PESW-B9D39AX-R63		
3	3	7 1/2	10	05	8.0 - 12.5	120	PESW-B12D15EX-R64	$174	PESW-B12D15AX-R64	$227	
						208-240	PESW-B12V24EX-R64		PESW-B12V24AX-R64		
						480	PESW-B12D39EX-R64		PESW-B12D39AX-R64		
3	5	10	15	05	11 - 17	120	PESW-B18D15EX-R66	$188	PESW-B18D15AX-R66	$241	
						208-240	PESW-B18V24EX-R66		PESW-B18V24AX-R66		
						480	PESW-B18D39EX-R66		PESW-B18D39AX-R66		
5	7 1/2	15	15	05	15 - 23	120	PESW-B25D15EX-R67	$223	PESW-B25D15AX-R67	$276	
						208-240	PESW-B25V24EX-R67		PESW-B25V24AX-R67		
						480	PESW-B25D39EX-R67		PESW-B25D39AX-R67		
10	10	20	25	05	22 - 32	120	PESW-B32D15EX-R68	$262	PESW-B32D15AX-R68	$298	
						208-240	PESW-B32V24EX-R68		PESW-B32V24AX-R68		
						480	PESW-B32D39EX-R68		PESW-B32D39AX-R68		
10	--	25	--	05	32 - 40	120	PESW-B38D15EX-R69	$321	PESW-B38D15AX-R69	$345	
						208-240	PESW-B38V24EX-R69		PESW-B38V24AX-R69		
						480	PESW-B38D39EX-R69		PESW-B38D39AX-R69		

Non-Combination Across the Line Starter continued on next page.

PESW Series – Non-Combination Across the Line Starter Continued

Three-Phase Enclosure Type 4X

Max UL Horsepower				Box	Setting Range (A)	Coil Voltage (V)	RESET only		START STOP + RESET		Multiplier New (Old)
200V	230V	460V	575V				Catalog Number	List Price	Catalog Number	List Price	
10	10	20	25	08	25 - 40	120	PESW-B40D15EX-R70	$536	PESW-B40D15AX-R70	$550	Z3P (Z3)
						208-240	PESW-B40V24EX-R70		PESW-B40V24AX-R70		
						480	PESW-B40D39EX-R70		PESW-B40D39AX-R70		
10	15	30	40	08	32 - 50	120	PESW-B50D15EX-R71	$564	PESW-B50D15AX-R71	$579	
						208-240	PESW-B50V24EX-R71		PESW-B50V24AX-R71		
						480	PESW-B50D39EX-R71		PESW-B50D39AX-R71		
15	20	40	50	08	40 - 57	120	PESW-B65D15EX-R72	$589	PESW-B65D15AX-R72	$604	
						208-240	PESW-B65V24EX-R72		PESW-B65V24AX-R72		
						480	PESW-B65D39EX-R72		PESW-B65D39AX-R72		
20	25	50	-	08	57 - 70	120	PESW-B80D15EX-R74	$635	PESW-B80D15AX-R74	$650	
						208-240	PESW-B80V24EX-R74		PESW-B80V24AX-R74		
						480	PESW-B80D39EX-R74		PESW-B80D39AX-R74		
-	25	50	-	08	63 - 80	120	PESW-B80D15EX-R75	$665	PESW-B80D15AX-R75	$680	
						208-240	PESW-B80V24EX-R75		PESW-B80V24AX-R75		
						480	PESW-B80D39EX-R75		PESW-B80D39AX-R75		
25	30	60	75	10	63 - 80	120	PESW-95V18EX-R43	$1,085	PESW-95V18AX-R43	$1,100	
						208-240	PESW-95V24EX-R43		PESW-95V24AX-R43		
						480	PESW-95V47EX-R43		PESW-95V47AX-R43		
30	30	75	75	10	75 - 97	120	PESW-105V18EX-R44	$1,184	PESW-105V18AX-R44	$1,199	
						208-240	PESW-105V24EX-R44		PESW-105V24AX-R44		
						480	PESW-105V47EX-R44		PESW-105V47AX-R44		
30	40	75	-	10	90 -112	120	PESW-105V18EX-R45	$1,184	PESW-105V18AX-R45	$1,199	
						208-240	PESW-105V24EX-R45		PESW-105V24AX-R45		
						480	PESW-105V47EX-R45		PESW-105V47AX-R45		

Notes:
- *OLR must be set at 115% of FLA.*
- *3-phase starters with 120V coil are wired for separate control.*
- *3-phase starters can be wired for single-phase applications (see diagram) on page 291.*

PESW Series – Non-Combination Across the Line Starter

Single-Phase Enclosure Type 4X

Max UL Horsepower		Box	Setting Range (A)	Coil Voltage (V)	RESET only		START STOP + RESET		Multiplier New (Old)
115V	230V				Catalog Number	List Price	Catalog Number	List Price	
1/8	1/3	05	2.8 - 4.0	120	PESWS-B9D15EX-RM60	$140	PESWS-B9D15AX-RM60	$155	Z3P (Z3)
				208-240	PESWS-B9V24EX-RM60		PESWS-B9V24AX-RM60		
1/4	1/2	05	4.0 - 6.3	120	PESWS-B9D15EX-RM61	$140	PESWS-B9D15AX-RM61	$155	
				208-240	PESWS-B9V24EX-RM61		PESWS-B9V24AX-RM61		
1/3	1	05	5.6 - 8.0	120	PESWS-B9D15EX-RM62	$140	PESWS-B9D15AX-RM62	$155	
				208-240	PESWS-B9V24EX-RM62		PESWS-B9V24AX-RM62		
1/2	1 1/2	05	7.0 - 10	120	PESWS-B9D15EX-RM63	$140	PESWS-B9D15AX-RM63	$155	
				208-240	PESWS-B9V24EX-RM63		PESWS-B9V24AX-RM63		
1/2	2	05	8.0 - 12.5	120	PESWS-B12D15EX-RM64	$140	PESWS-B12D15AX-RM64	$155	
				208-240	PESWS-B12V24EX-RM64		PESWS-B12V24AX-RM64		
3/4	2	05	10 - 15	120	PESWS-B18D15EX-RM65	$161	PESWS-B18D15AX-RM65	$182	
				208-240	PESWS-B18V24EX-RM65		PESWS-B18V24AX-RM65		
1	3	05	11 - 17	120	PESWS-B18D15EX-RM66	$170	PESWS-B18D15AX-RM66	$182	
				208-240	PESWS-B18V24EX-RM66		PESWS-B18V24AX-RM66		
1 1/2	3	05	15 - 23	120	PESWS-B25D15EX-RM67	$180	PESWS-B25D15AX-RM67	$195	
				208-240	PESWS-B25V24EX-RM67		PESWS-B25V24AX-RM67		
2	5	05	22 - 32	120	PESWS-B32D15EX-RM68	$180	PESWS-B32D15AX-RM68	$195	
				208-240	PESWS-B32V24EX-RM68		PESWS-B32V24AX-RM68		
3	7 1/2	05	32 - 40	120	PESWS-B38D15EX-RM69	$274	PESWS-B38D15AX-RM69	$300	
				208-240	PESWS-B38V24EX-RM69		PESWS-B38V24AX-RM69		
3	7 1/2	08	25 - 40	120	PESWS-B40D15EX-RM70	$410	PESWS-B40D15AX-RM70	$418	
				208-240	PESWS-B40V24EX-RM70		PESWS-B40V24AX-RM70		
3	10	08	32 - 50	120	PESWS-B50D15EX-RM71	$430	PESWS-B50D15AX-RM71	$440	
				208-240	PESWS-B50V24EX-RM71		PESWS-B50V24AX-RM71		

Accessories – Mounting in Control Stations

Contact Block

Replacement Base Mount Contact Blocks for PESW(S)-B9...38

	Description	Contacts	Diagram	Standard Packing	Catalog Number	Price	Multiplier
0.015 kg	Single contact blocks to mounting in control stations or DIN rail 35 mm	1NO		1 piece	BC10B-CSW	$5.00	Z5

Notes:
- *Overload must be set at 115% of motor FLA.*
- *PESWS – Single-phase version – assembled with 2-pole contactor and 2-pole overload relay.*

Please refer to back cover for description of "NOTES"

For detailed specifications, data sheets, drawings and performance curves visit http:// www.weg.net

Data subject to change without notice.

Wiring Diagram

Single-Phase Starter

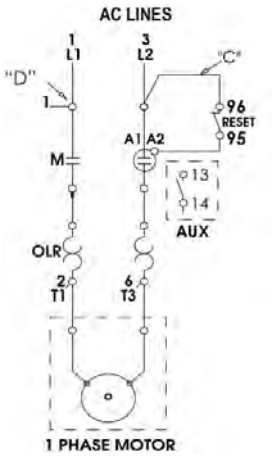

Three-Phase Starter

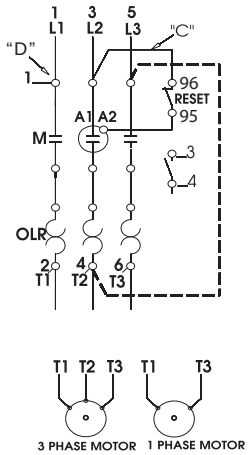

Conversion to single-phase, add jumper wire from L3 to T2 (follow dotted line connection above).

Separate Control

For separate control, remove wires "C" and "D" if supplied and connect separate control lines to terminal Nº 96 on the overload relay and to terminal Nº _3 on the auxiliary contact block (for 3-wire control) or to the contactor coil Nº A1 (for 2-wire control).

Pilot Devices

2-Wire Control

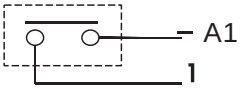

NOT FOR USE WITH AUTO RESET OL RELAYS.

3-Wire Control

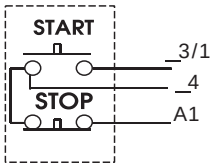

Dimensions

Size 05 – mm (in)	Size 08 – mm (in)	Size 10 – mm (in)
øA = 5.5 (0.2165)	øA = 6.0 (0.2)	øA = 7.0 (0.3)
B = 219.0 (8.622)	B = 275 (10.8)	B = 355 (14.0)
C = 112 (4.4331)	C = 143 (5.6)	C = 167 (6.6)
D = 114.0 (4.4882)	D = 180 (7.1)	D = 250 (9.9)
E = 217 (8.5433)	E = 280 (11.0)	E = 360 (14.2)

Provision for Cable Gland Fitting	Standard		
	Top	Bottom	Back
Size 05	2 x 1/2" - 3/4" PG13.5	2 x 1/2" - 3/4" PG13.5	4 X 1/2" PG13.5
Size 08	2 x 3/4" and 1"	2 x 3/4" and 1"	-
Size 10	2 x 3/4" and 1"	2 x 3/4" and 1"	-
	1 x 1" and 1 1/4"	1 x 1" and 1 1/4"	-

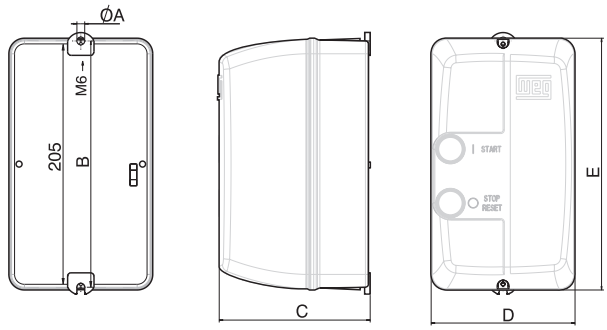

For wall mounting on starters size 08 and 10, four screws with the following characteristics should be used:

- Pan, dome or rounded shaped head;
- Starter size 08:
- Screws size 1/4 in (or M6 – ISO Standard);
- Dimensions: diameter thread shall be maximum 1/4 in and diameter head shall be maximum 15/64 in.
- Starter size 10:
- Screws size 12 (or M5 – ISO Standard);
- Dimensions: diameter thread shall be maximum 0.236 in and diameter head shall be maximum 0.394 in.

COMBINATION STARTERS

ESWC Series – Combination Starters

High performance and optimized solutions for motor starting and control. WEG offers full voltage non-reversing combination starters, ESWC series, up to 250 HP at 460 VAC (300A) with control power transformers for three-phase applications.

Standard Features

- Multi-rated enclosure type: 1/3R/4/12
- Multi-voltage transformer: primary 208V/230V/460V – secondary 120V
- Branch disconnect: rotary through-the-door handle
- Short-circuit protection: molded case circuit breaker
- Motor control: magnetic IEC contactor
- Overload protection: solid-state overload relay
  - Selectable trip class 10, 20, 30
  - (5:1) ratio adjustable current setting
- Standard Control Devices: RESET, START, STOP, HOA, and RUN LIGHT

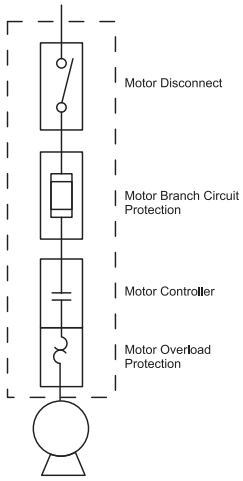

ESWC Catalog Number Sequence

ESWC 9 - TM1 K 9 - RE1

Product Code
ESWC: Combination Starters

Contactor Size
9: 9A
12: 12A
18: 18A
25: 25A
38: 38A
65: 65A
105: 105A
112: 112A
150: 150A

Control Power Transformer (Pri/Sec)[1]
TM1: 208/230/460 V - 120V1
T5: 600 V - 120V

Control Options
A: RESET, START, STOP
B: RESET, START, STOP, HOA
C: RESET, START/STOP SELECTOR
D: RESET, STOP
E: RESET
I: NONE
J: RESET, START, STOP, RUN LIGHT
K: RESET, START, STOP, HOA, RUN LIGHT
S: RESET, START, HOA

Enclosure Type
9: 1/3R/4/12
0: 4X SS

Electronic Overload Range
RE1: 0.4 - 2.0A
RE2: 1.6 - 8.0A
RE3: 5.0 - 25A
RE4: 8.0 - 40A
RE5: 14 - 56A
RE6: 28 - 112A
RE7: 50 - 250A
RE8: 85 - 420A
RE9: 170 - 840A

Chart intended as reference only and not to create part numbers.

Notes:
1) Wired for 480V primary from the factory. Instructions and fuses provided for 208V - 230V field conversion.

Please refer to back cover for description of "NOTES"

For detailed specifications, data sheets, drawings and performance curves visit http:// www.weg.net

Data subject to change without notice.

ESWC Series – Full Voltage Non-Reversing Combination Starter (Three Phase)

Supply Voltage	Motor HP Range	Overload Range (A)	Metallic Enclosure Type 1/3R/4/12			Multiplier New (Old)
			Catalog Number	List Price	Box Size	
208 VAC	-	0.4-2.0	ESWC-9TM1K9-RE1	$2,120	B-1	Z3C (Z3)
240 VAC	-					
480 VAC	0.5 – 0.75					
600 VAC	0.5 - 1		ESWC-9T5K9-RE1			
208 VAC	0.5 - 1.5	1.6-8.0	ESWC-9TM1K9-RE2	$2,120	B-1	
240 VAC	0.5 - 2					
480 VAC	0.75 - 5					
600 VAC	1 - 5		ESWC-9T5K9-RE2			
208 VAC	1.5 - 3	5.0-25.0	ESWC-12TM1K9-RE3	$2,120	B-1	
240 VAC	1.5 - 3					
480 VAC	5 - 7.5					
600 VAC	5 - 10		ESWC-12T5K9-RE3			
208 VAC	3 - 5	5.0-25.0	ESWC-18TM1K9-RE3	$2,170	B-1	
240 VAC	3 - 5					
480 VAC	7.5 - 10					
600 VAC	10 - 15		ESWC-18T5K9-RE3			
208 VAC	5 - 7.5	8.0-40.0	ESWC-25TM1K9-RE4	$2,170	B-1	
240 VAC	5 - 7.5					
480 VAC	7.5 - 15					
600 VAC	15 - 20		ESWC-25T5K9-RE4			
208 VAC	7.5 - 10	8.0-40.0	ESWC-38TM1K9-RE4	$2,355	B-1	
240 VAC	7.5 - 10					
480 VAC	15 - 25					
600 VAC	20 - 30		ESWC-38T5K9-RE4			
208 VAC	10 - 20	28-112	ESWC-65TM1K9-RE6	$2,652	B-1	
240 VAC	10 - 20					
480 VAC	25 - 40					
600 VAC	30 - 60		ESWC-65T5K9-RE6			
208 VAC	20 - 30	28-112	ESWC-105TM1K9-RE6	$3,455	B-2	
240 VAC	20 - 30					
480 VAC	40 - 75					
600 VAC	50 - 100		ESWC-105T5K9-RE6			
208 VAC	30 - 50	50-250	ESWC-150TM1K9-RE7	$5,500	B-3	
240 VAC	30 - 50					
480 VAC	75 - 125					
600 VAC	75 - 150		ESWC-150T5K9-RE7			
208 VAC	50 - 60	50-250	ESWC-180TM1K9-RE7	$6,540	B-3	
240 VAC	50 - 60					
480 VAC	100 - 150					
600 VAC	125 - 175		ESWC-180T5K9-RE7			
208 VAC	60 - 100	85-420	ESWC-300TM1K9-RE8	$7,600	B-3	
240 VAC	60 - 125					
480 VAC	150 - 250					
600 VAC	175 - 300		ESWC-300T5K9-RE8			

Notes:
- *Wired for 480V primary from the factory. Instructions and fuses provided for 208V - 230V field conversion.*

ESWC

Dimensions – mm (inch)

Enclosure Size	Dimensions – mm (inch)		
	H	W	D
B1	400 (15.75)	400 (15.75)	200 (7.87)
B2	500 (19.69)	400 (15.75)	200 (7.87)
B3	800 (31.5)	600 (23.6)	300 (11.8)

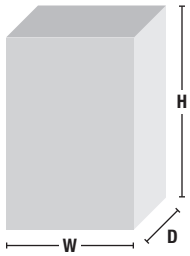

B1 Enclosure

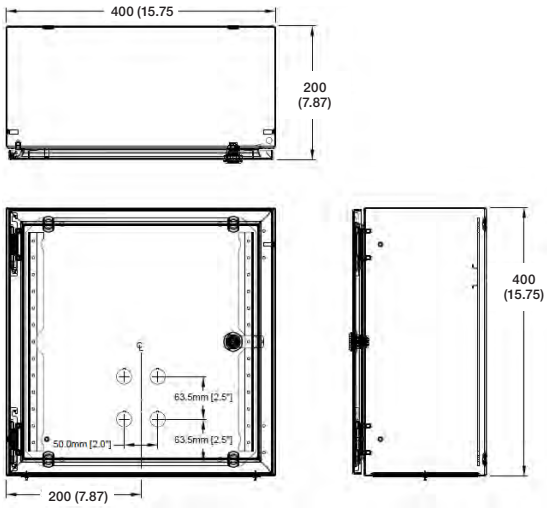

B2 Enclosure

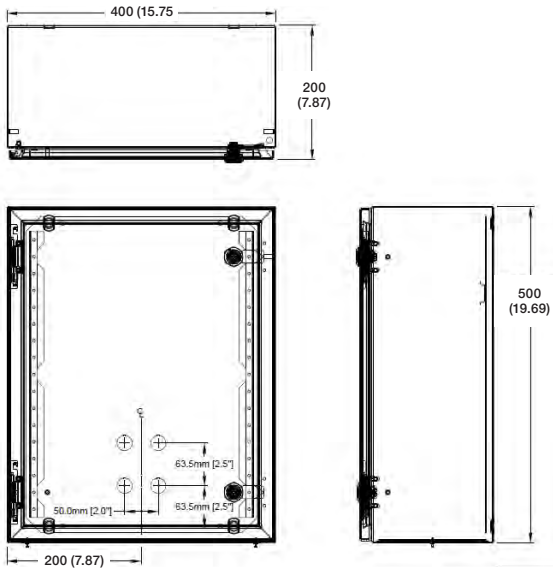

B3 Enclosure

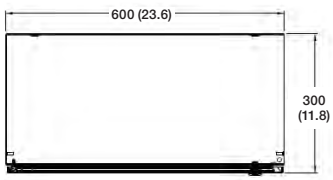

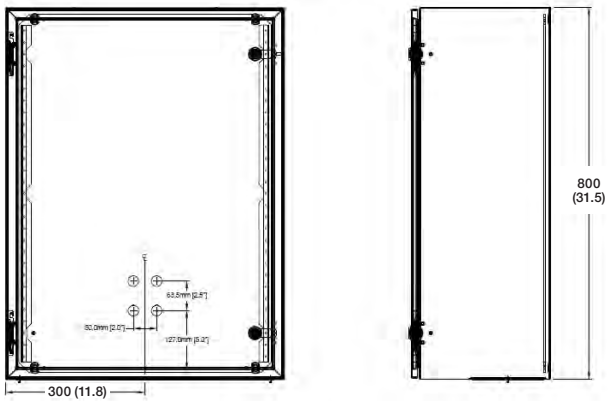

Data subject to change without notice.

ESWE Series – Combination Starters

High performance and optimized solutions for motor starting and control. WEG offers full voltage non-reversing combination starters, ESWE series, up to 20 HP at 460 VAC (38A) with or without control power transformers for three-phase applications.

Standard Features

- Standard enclosure type: non-metallic 4X
- Control power transformer: with or without
  - CPT primary 575V – secondary 120V
  - CPT primary 480V/240V – secondary 120V
- Branch disconnect: rotary through-the-door handle
- Short-circuit protection: manual motor protector
- Motor control: magnetic IEC contactor
- Overload protection: manual motor protector
- Standard control devices: HAND-OFF-AUTO switch, START-STOP pushbuttons, pilot lights

ESWE Catalog Number Sequence

ESWE - B 9 V24 K X - D10

Contactor Series
B: CWB

Contactor Frame Size
9: 9A
12: 12A
18: 18A
25: 25A
38: 38A

Coil Voltage
Without CPT
D02: 24 VAC
D15: 120 VAC
V24:208-240 VAC
D39: 480 VAC
D45: 600 VAC
With CPT
T01: 208V / 120V
T02: 240V / 120V
T03: 277V / 120V
T04: 480V / 120V
T05: 600V / 120V
T06: 208V / 24V
T08: 240V / 24V
T09: 277V / 24V
T0A: 240V / 24V
TOB: 600V / 24V

Control Devices
K: HOA, START, STOP, RESET Pilot Lights

Enclosure Type
X: NEMA 4X

Overload Current Setting
D01: 0.1 - 0.16A
D02: 0.16 - 0.25A
D03: 0.25 - 0.4A
D04: 0.4 - 0.63A
D05: 0.63 - 1A
D06: 1 - 1.6A
D07: 1.6 - 2.5A
D08: 2.5 - 4A
D09: 4 - 6.3A
D10: 6.3 - 10A
D11: 10 - 16A
D12: 16 - 20A
D13: 20 - 25A
D14: 25 - 32A

Chart intended as reference only and not to create part numbers.

ESWE

Combination Type E Across The Line Starter

- Branch disconnect: rotary through-the-door handle
- Short-circuit protection: manual motor protection
- Motor control: magnetic contactor
- Overload protection: manual motor protection
- Control devices: HAND-OFF-AUTO switch, START-STOP pushbutton, pilot lights

Three-Phase Without CPT – Enclosure Type 4X
Combination Type E Across the Line Starter

Max 3-ph HP Motors				Overload Setting Range (A)	Coil Voltage (VAC)[1]	Non-Metallic Enclosure Type 4X			Multiplier New (Old)
200V	230V	460V	575V			Catalog Number	List Price	Box Size	
-	-	1/2	1/2	0.63 - 1.0	120	ESWE-B9D15KX-D05	$855	E-1	Z3C (Z3)
					480	ESWE-B9D39KX-D05			
1/4	1/3	3/4	1	1.0 - 1.6	120	ESWE-B9D15KX-D06	$855	E-1	
					208-240	ESWE-B9V24KX-D06			
					480	ESWE-B9D39KX-D06			
1/2	1/2	1 1/2	1 1/2	1.6 - 2.5	120	ESWE-B9D15KX-D07	$855	E-1	
					208-240	ESWE-B9V24KX-D07			
					480	ESWE-B9D39KX-D07			
3/4	1	2	3	2.5 - 4.0	120	ESWE-B9D15KX-D08	$855	E-1	
					208-240	ESWE-B9V24KX-D08			
					480	ESWE-B9D39KX-D08			
1 1/2	1 1/2	3	5	4.0 - 6.3	120	ESWE-B9D15KX-D09	$855	E-1	
					208-240	ESWE-B9V24KX-D09			
					480	ESWE-B9D39KX-D09			
3	3	5	7 1/2	6.3 - 10	120	ESWE-B9D15KX-D10	$865	E-1	
					208-240	ESWE-B9V24KX-D10			
					480	ESWE-B9D39KX-D10			
5	5	10	15	10 - 16	120	ESWE-B18D15KX-D11	$875	E-1	
					208-240	ESWE-B18V24KX-D11			
					480	ESWE-B18D39KX-D11			
7 1/2	7 1/2	15	15	16 - 20	120	ESWE-B25D15KX-D12	$900	E-1	
					208-240	ESWE-B25V24KX-D12			
					480	ESWE-B25D39KX-D12			
10	10	20	25	25 - 32	120	ESWE-B38D15KX-D14	$990	E-1	
					208-240	ESWE-B38V24KX-D14			
					480	ESWE-B38D39KX-D14			

Three-Phase with CPT – Enclosure Type 4X

Max 3-ph HP Motors				Overload Setting Range (A)	Coil Voltage (VAC) (prim. / sec.)	Non-Metallic Enclosure Type 4X			Multiplier New (Old)
200V	230V	460V	575V			Catalog Number	List Price	Box Size	
-	-	1/2	1/2	0.63 - 1.0	480 / 120	ESWE-B9T04KX-D05	$1,140	E-1	Z3C (Z3)
					575 / 120	ESWE-B9T05KX-D05			
1/4	1/3	3/4	1	1.0 - 1.6	240 / 120	ESWE-B9T02KX-D06	$1,140	E-1	
					480 / 120	ESWE-B9T04KX-D06			
					575 / 120	ESWE-B9T05KX-D06			
1/2	1/2	1 1/2	1 1/2	1.6 - 2.5	240 / 120	ESWE-B9T02KX-D07	$1,140	E-1	
					480 / 120	ESWE-B9T04KX-D07			
					575 / 120	ESWE-B9T05KX-D07			
3/4	1	2	3	2.5 - 4.0	240 / 120	ESWE-B9T02KX-D08	$1,140	E-1	
					480 / 120	ESWE-B9T04KX-D08			
					575 / 120	ESWE-B9T05KX-D08			
1 1/2	1 1/2	3	5	4.0 - 6.3	240 / 120	ESWE-B9T02KX-D09	$1,140	E-1	
					480 / 120	ESWE-B9T04KX-D09			
					575 / 120	ESWE-B9T05KX-D09			
3	3	5	7 1/2	6.3 - 10	240 / 120	ESWE-B9T02KX-D10	$1,140	E-1	
					480 / 120	ESWE-B9T04KX-D10			
					575 / 120	ESWE-B9T05KX-D10			
5	5	10	15	10 - 16	240 / 120	ESWE-B18T02KX-D11	$1,155	E-1	
					480 / 120	ESWE-B18T04KX-D11			
					575 / 120	ESWE-B18T05KX-D11			
7 1/2	7 1/2	15	15	16 - 20	240 / 120	ESWE-B25T02KX-D12	$1,175	E-1	
					480 / 120	ESWE-B25T04KX-D12			
					575 / 120	ESWE-B25T05KX-D12			
10	10	20	25	25 - 32	240 / 120	ESWE-B38T02KX-D14	$1,260	E-1	
					480 / 120	ESWE-B38T04KX-D14			
					575 / 120	ESWE-B38T05KX-D14			

Notes:
1) Please contact your local WEG representative for starters with 575V coil voltage.
• 3-phase starters with 120V coil are pre-wired for separate control
• 3-phase starters can be wired for single-phase applications

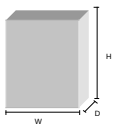

Dimensions (in)			
Box Size	Enclosure Size		
	H	W	D
E-1	14.2	9.9	6.6

Data subject to change without notice.

Dimensions (in) – ESWE Series

Enclosure Size	Dimensions (in)		
	H	W	D
E-1	14.2	9.9	6.6

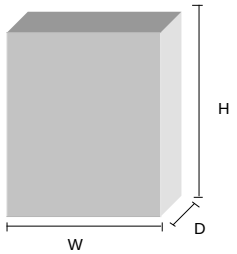

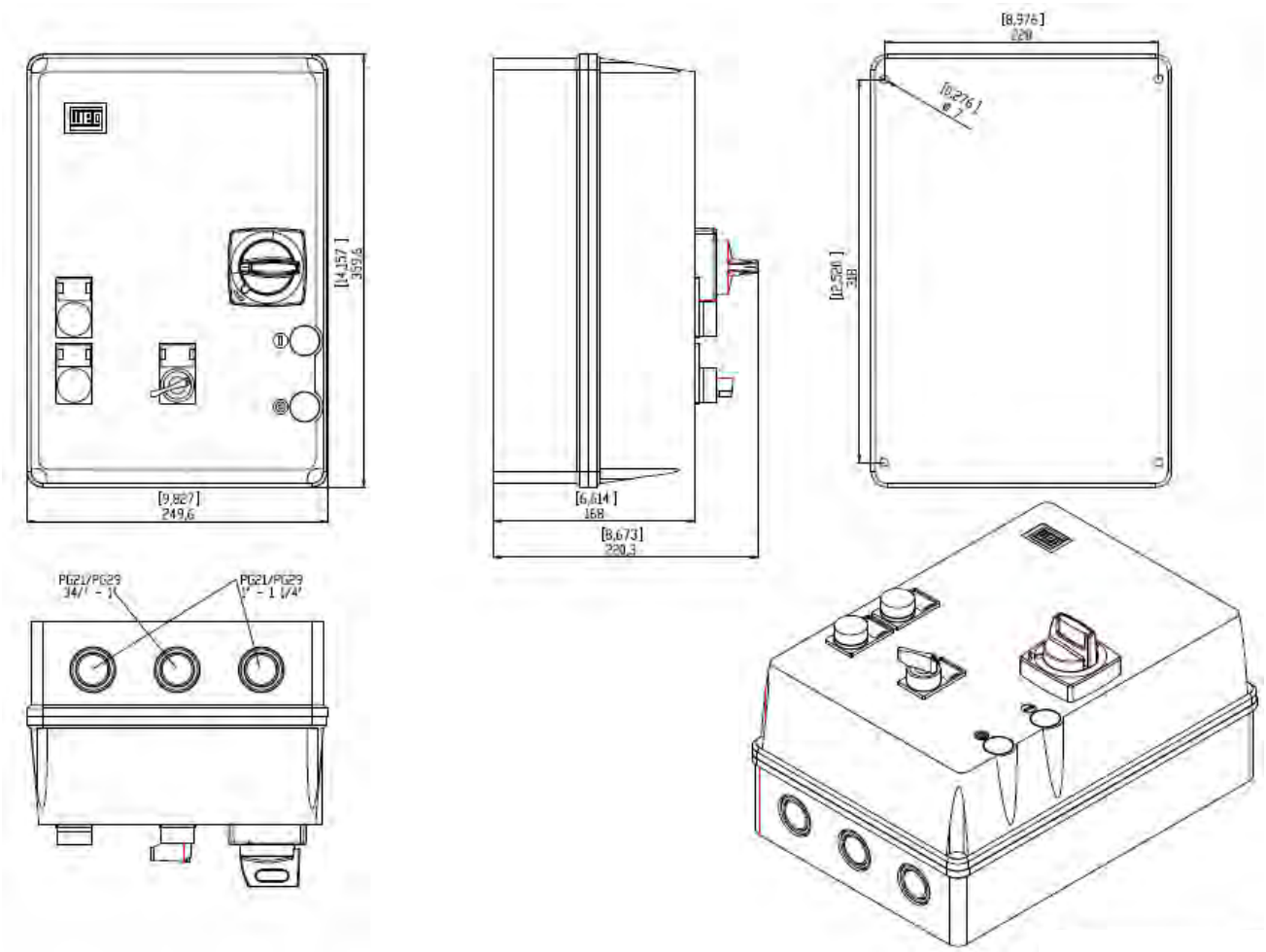

ESWX Series – Hazardous Location Starters

Motor Control for Hazardous Areas: Class I, Groups C & D – Class II, Groups E, F, G

WEG Explosion Proof Motors Starters are the perfect compliment for motor control in hazardous and industrial environments. Applications include oil and gas, mining, and chemical processing industries.

ESWX-M Series – Enclosed Manual Motor Starters

- High short-circuit interrupting rating – up to 50 kA at 480V
- Thermal overload protection Class 10
- Phase loss sensitivity protection
- Ambient temperature compensation -4ºF+140ºF (-20ºC +60ºC)
- Lockable rotary handle mechanism for disconnect
- Snap-in accessories
- Finger safe protected terminals
- Test trip feature
- Manual motor starters
- Suitable for motor disconnect applications

ESWX Series – Enclosed Starters

- Copper free aluminum alloy body
- Bolted flange design
- Durable cast on lugs
- Watertight 'O' rings for NEMA applications
- Hinged door for easier access
- NEMA 7 / 9 housing
- Class I, Groups C and D - Class II, Groups E, F, G
- Starter includes contactor plus overload relay
- START, STOP, and RESET buttons (standard)
- HOA or pilot light (optional)
- Available up to 75 HP at 460 VAC – 100 A
- NEMA rated starters available from size 00 to size 3 on request

Data subject to change without notice.

ESWX-M25 Series

- NEMA 4X / 7 / 9 housing
- Hinged cover for easy access
- ON / OFF – rotary handle
- Lockable in OFF position
- Available up to 20 HP at 460 VAC – 32A

ESWX-M25 – Product Selection

Max 3 Phase UL HP			Thermal Setting (A)	Short-Circuit Interrupting Capacity		Catalog Number	List Price	Multiplier
Three-Phase								
230V	460V	575V		480 VAC	600 VAC			
-	1/2	1/2	0.63 - 1.0	50 kA	25 kA	ESWX-M25R79-U001	$2,200	Z33
-	3/4	3/4	1.0 - 1.6	50 kA	25 kA	ESWX-M25R79-D016	$2,200	
1/2	1	1 1/2	1.6 - 2.5	50 kA	25 kA	ESWX-M25R79-D025	$2,200	
3/4	2	3	2.5 - 4.0	50 kA	25 kA	ESWX-M25R79-U004	$2,200	
1 1/2	3	5	4.0 - 6.3	50 kA	25 kA	ESWX-M25R79-D063	$2,200	
3	5	7 1/2	6.3 - 10	50 kA	25 kA	ESWX-M25R79-U010	$2,200	
5	10	15	10 - 16	50 kA	25 kA	ESWX-M25R79-U016	$2,200	
7 1/2	15	15	16 - 20	50 kA	25 kA	ESWX-M25R79-U020	$2,200	
7 1/2	15	20	20 - 25	50 kA	25 kA	ESWX-M25R79-U025	$2,200	
10	20	25	25 - 32	42 kA	25 kA	ESWX-M25R79-U032	$2,200	

ESWX-M65 Series

- NEMA 4X / 7 / 9 housing
- Hinged cover for easy access
- ON / OFF – rotary handle
- Lockable in OFF position
- Available up to 50 HP at 460 VAC – 65A

ESWX-M65 – Product Selection

Max 3 Phase UL HP			Thermal Setting (A)	Short-Circuit Interrupting Capacity		Catalog Number	List Price	Multiplier
Three-Phase								
230V	460V	575V		480 VAC	600 VAC			
15	25	30	32 - 40	35 kA	10 kA	ESWX-M65R79-U040	$2,600	Z33
15	30	40	40 - 50	35 kA	10 kA	ESWX-M65R79-U050	$2,600	
20	50	60	50 - 65	35 kA	10 kA	ESWX-M65R79-U065	$2,600	

ESWX-M100 Series

- NEMA 4X / 7 / 9 housing
- Hinged cover for easy access
- ON / OFF – rotary handle
- Lockable in OFF position
- Available up to 75 HP at 460 VAC – 100A

ESWX-M100 – Product Selection

Max 3 Phase UL HP			Thermal Setting (A)	Short-Circuit Interrupting Capacity		Catalog Number	List Price	Multiplier
Three-Phase								
230V	460V	575V		480 VAC	600 VAC			
25	50	60	55 - 75	50 kA	10 kA	ESWX-M100R79-U075	$3,350	Z33
30	60	75	70 - 90	50 kA	10 kA	ESWX-M100R79-U090	$3,350	
30	75	100	80 - 100	50 kA	10 kA	ESWX-M100R79-U100	$3,350	

ESWX

Accessories for MPW18 / 40 / 80 – Summary

Description	Catalog Number	List Price	Multiplier
Auxiliary Contact Blocks			
1NO & 1NC auxiliary contact block front mounting – 250V max	ACBF-11	$20	Z4
1NO & 1NC auxiliary contact block left side mounting – 600V max	ACBS-11	$22	
2NO Auxiliary contact block left side mounting – 600V max	ACBS-20	$22	
2NC Auxiliary contact block left side mounting – 600V max	ACBS-02	$22	
Undervoltage and Shunt Release Blocks			
Shunt release block right side mounting – 20-24V 50/60 Hz	SRMP D51	$56	Z4
Shunt release block right side mounting – 100-127V 50/60 Hz	SRMP D59	$56	
Shunt release block right side mounting – 200-240V 50/60 Hz	SRMP D65	$56	
Undervoltage release block right side mounting – 24V 60 Hz	URMP D02	$56	
Undervoltage release block right side mounting – 120V 60 Hz	URMP V18	$56	
Undervoltage release block right side mounting – 208V 60 Hz	URMP V23	$56	
Undervoltage release block right side mounting – 240V 60 Hz	URMP V30	$56	
Undervoltage release block right side mounting – 480V 60 Hz	URMP V47	$56	

Accessories For MPW100 – Summary

Description	Catalog Number	List Price	Multiplier
Auxiliary Contact Blocks			
1NO & 1NC auxiliary contact block front mounting – 250V max	ACBF-11 MPW100	$35	Z4
1NO & 1NC auxiliary contact block left side mounting – 600V max	ACBS-11 MPW100	$27	
2NO Auxiliary contact block left side mounting – 600V max	ACBS-20 MPW100	$27	
2NC Auxiliary contact block left side mounting – 600V max	ACBS-02 MPW100	$27	
Undervoltage and Shunt Release Blocks			
Shunt release block right side mounting – 120V 50/60 Hz	SRMP V18 MPW100	$56	Z4
Shunt release block right side mounting – 240-260V 60 Hz	SRMP V33 MPW100	$56	
Undervoltage release block right side mounting – 120V 60 Hz	URMP V18 MPW100	$56	
Undervoltage release block right side mounting – 240V 60 Hz	URMP V33 MPW100	$56	
Undervoltage release block right side mounting – 460V 60 Hz	URMP V43 MPW100	$56	

Data subject to change without notice.

NEMA 7/9 Enclosure – Three Phase

- Motor control: magnetic contactor
- Overload protection: thermal overload relay
- Control devices: START, STOP and RESET pushbuttons
  - One additional pilot device available as modification; ex. I-HOA or I-indicator light
- Cast aluminum NEMA 7/9 housing with NEMA 4 gasket
  - Breather and drain available on request

ESWX Series – Non-combination Across The Line Starter for use in Hazardous Areas Enclosure Type NEMA 7/9

Max UL 3 Phase Horsepower				Box	Setting Range (A)	Coil Voltage (V)	RESET only		START + STOP + RESET		Multiplier
200V	230V	460V	575V				Catalog Number	List Price	Catalog Number	List Price	
-	1/3	1/2	-	X04	0.8 - 1.2	120	ESWX-25V18E79-R23	$3,250	ESWX-25V18A79-R23	$3,850	Z33
						208-240	ESWX-25V24E79-R23		ESWX-25V24A79-R23		
						480	ESWX-25V47E79-R23		ESWX-25V47A79-R23		
-	-	1	1	X04	1.2 - 1.8	120	ESWX-25V18E79-R24	$3,250	ESWX-25V18A79-R24	$3,850	
						480	ESWX-25V47E79-R24		ESWX-25V47A79-R24		
1/2	3/4	1 1/2	2	X04	1.8 - 2.8	120	ESWX-25V18E79-R25	$3,250	ESWX-25V18A79-R25	$3,850	
						208-240	ESWX-25V24E79-R25		ESWX-25V24A79-R25		
						480	ESWX-25V47E79-R25		ESWX-25V47A79-R25		
1	1	2	3	X04	2.8 - 4.0	120	ESWX-25V18E79-R26	$3,250	ESWX-25V18A79-R26	$3,850	
						208-240	ESWX-25V24E79-R26		ESWX-25V24A79-R26		
						480	ESWX-25V47E79-R26		ESWX-25V47A79-R26		
1 1/2	1 1/2	3	5	X04	4.0 - 6.3	120	ESWX-25V18E79-R27	$3,250	ESWX-25V18A79-R27	$3,850	
						208-240	ESWX-25V24E79-R27		ESWX-25V24A79-R27		
						480	ESWX-25V47E79-R27		ESWX-25V47A79-R27		
2	2	5	-	X04	5.6 - 8.0	120	ESWX-25V18E79-R28	$3,250	ESWX-25V18A79-R28	$3,850	
						208-240	ESWX-25V24E79-R28		ESWX-25V24A79-R28		
						480	ESWX-25V47E79-R28		ESWX-25V47A79-R28		
3	3	-	7 1/2	X04	7.0 - 10	120	ESWX-25V18E79-R29	$3,250	ESWX-25V18A79-R29	$3,850	
						208-240	ESWX-25V24E79-R29		ESWX-25V24A79-R29		
-	-	7 1/2	10	X04	8.0 - 12.5	120	ESWX-25V18E79-R30	$3,250	ESWX-25V18A79-R30	$3,850	
						480	ESWX-25V47E79-R30		ESWX-25V47A79-R30		
5	5	10	15	X04	11 - 17	120	ESWX-25V18E79-R32	$3,250	ESWX-25V18A79-R32	$3,850	
						208-240	ESWX-25V24E79-R32		ESWX-25V24A79-R32		
						480	ESWX-25V47E79-R32		ESWX-25V47A79-R32		
7 1/2	7 1/2	15	-	X04	15 - 23	120	ESWX-25V18E79-R33	$3,250	ESWX-25V18A79-R33	$3,850	
						208-240	ESWX-25V24E79-R33		ESWX-25V24A79-R33		
						480	ESWX-25V47E79-R33		ESWX-25V47A79-R33		
10	10	20	25	X04	22 - 32	120	ESWX-40V18E79-R34	$3,300	ESWX-40V18A79-R34	$3,950	
						208-240	ESWX-40V24E79-R34		ESWX-40V24A79-R34		
						480	ESWX-40V47E79-R34		ESWX-40V47A79-R34		
10	15	30	-	X04	25 - 40	120	ESWX-40V18E79-R35	$3,300	ESWX-40V18A79-R35	$3,950	
						208-240	ESWX-40V24E79-R35		ESWX-40V24A79-R35		
						480	ESWX-40V47E79-R35		ESWX-40V47A79-R35		
15	15	30	40	X04	32 - 50	120	ESWX-80V18E79-R38	$3,400	ESWX-80V18A79-R38	$4,050	
						208-240	ESWX-80V24E79-R38		ESWX-80V24A79-R38		
						480	ESWX-80V47E79-R38		ESWX-80V47A79-R38		
20	20	40	50	X04	40 - 57	120	ESWX-80V18E79-R39	$3,400	ESWX-80V18A79-R39	$4,050	
						208-240	ESWX-80V24E79-R39		ESWX-80V24A79-R39		
						480	ESWX-80V47E79-R39		ESWX-80V47A79-R39		
-	25	50	60	X04	57 - 70	120	ESWX-80V18E79-R41	$3,420	ESWX-80V18A79-R41	$4,050	
						208-240	ESWX-80V24E79-R41		ESWX-80V24A79-R41		
						480	ESWX-80V47E79-R41		ESWX-80V47A79-R41		
25	30	60	75	Consult Factory	63 - 80	120	ESWX-105V18E79-R43	$4,870	ESWX-105V18A79-R43	$5,600	
						208-240	ESWX-105V24E79-R43		ESWX-105V24A79-R43		
						480	ESWX-105V47E79-R43		ESWX-105V47A79-R43		
30	-	75	-	Consult Factory	75 - 97	120	ESWX-105V18E79-R44	$4,870	ESWX-105V18A79-R44	$5,600	
						480	ESWX-105V47E79-R44		ESWX-105V47A79-R44		
-	40	-	-	Consult Factory	90 - 112	120	ESWX-105V18E79-R45	$4,870	ESWX-105V18A79-R45	$5,600	
						208-240	ESWX-105V24E79-R45		ESWX-105V24A79-R45		

Notes:
- *Overload Relay dial must be set with FLA of the motor.*
- *3-phase starters with 120V coil are pre-wired for separate control.*
- *3-phase starters can be wired for single-phase applications.*

ESWX

Dimensions – Inch

Explosion Proof Manual Starters

ESWX-M16

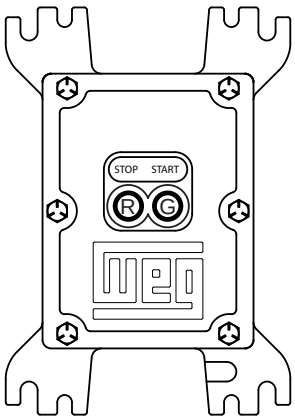

FRONT

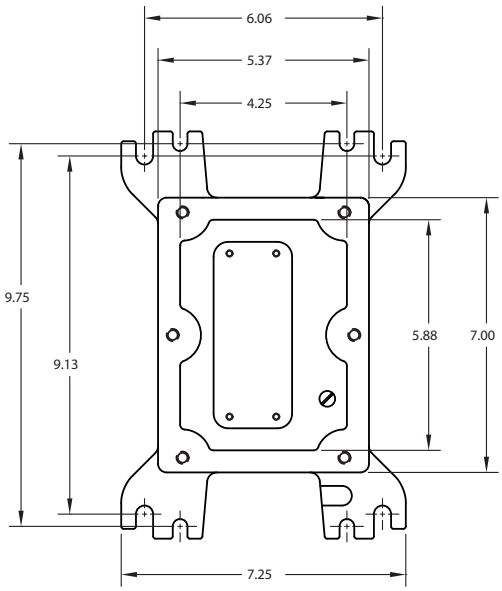

FRONT
(w/DOOR REMOVED)

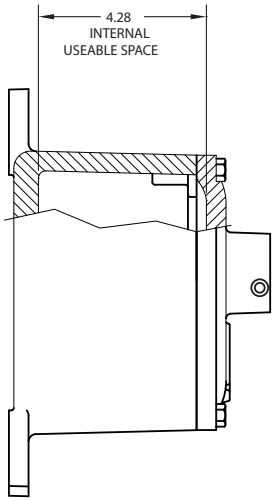

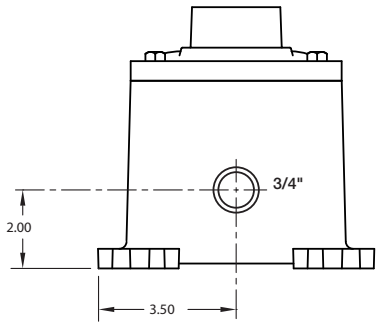

BOTTOM

Certifications
Class I, Groups C & D
Class II, Groups E, F, & G
UL Standard 1203 (Classified)
NEMA 7 (C&D), 9 (E, F, & G)

Data subject to change without notice.

Dimensions – Inch

Explosion Proof Manual Starters

ESWX-M25 and ESWX-M65

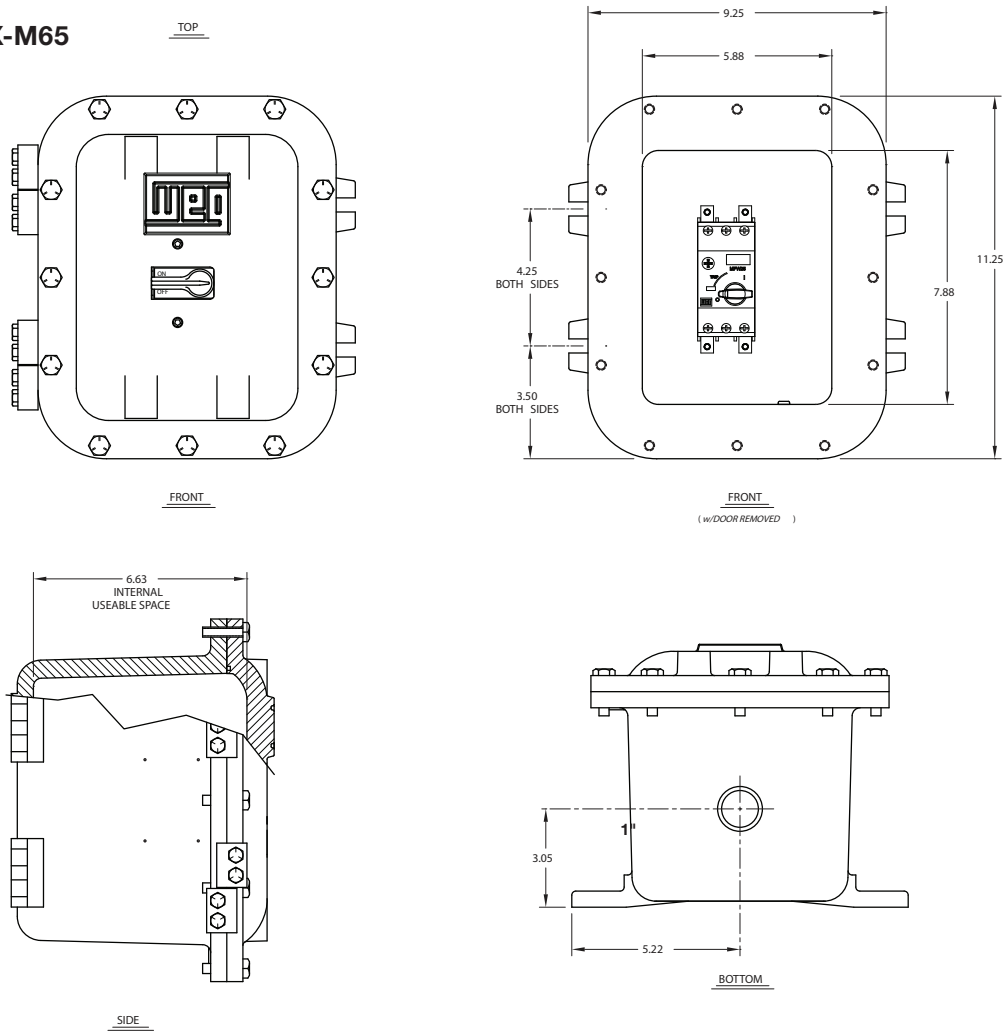

ESWX-M100

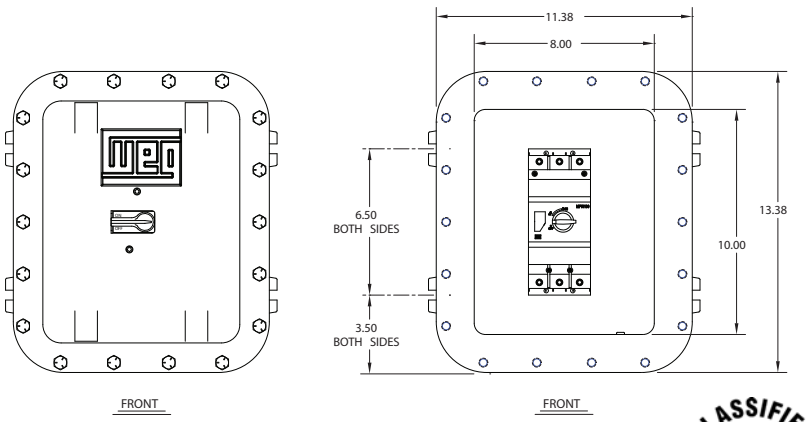

Certifications
Class I, Groups C & D
Class II, Groups E, F, & G
UL Standard 1203 (Classified)
NEMA 7 (C&D), 9 (E, F, & G)

ESWX

Dimensions – Inch

Explosion Proof Non-Combination Starters

ESWX Series: Type-NEMA 7/9 – Cast Aluminum Enclosure

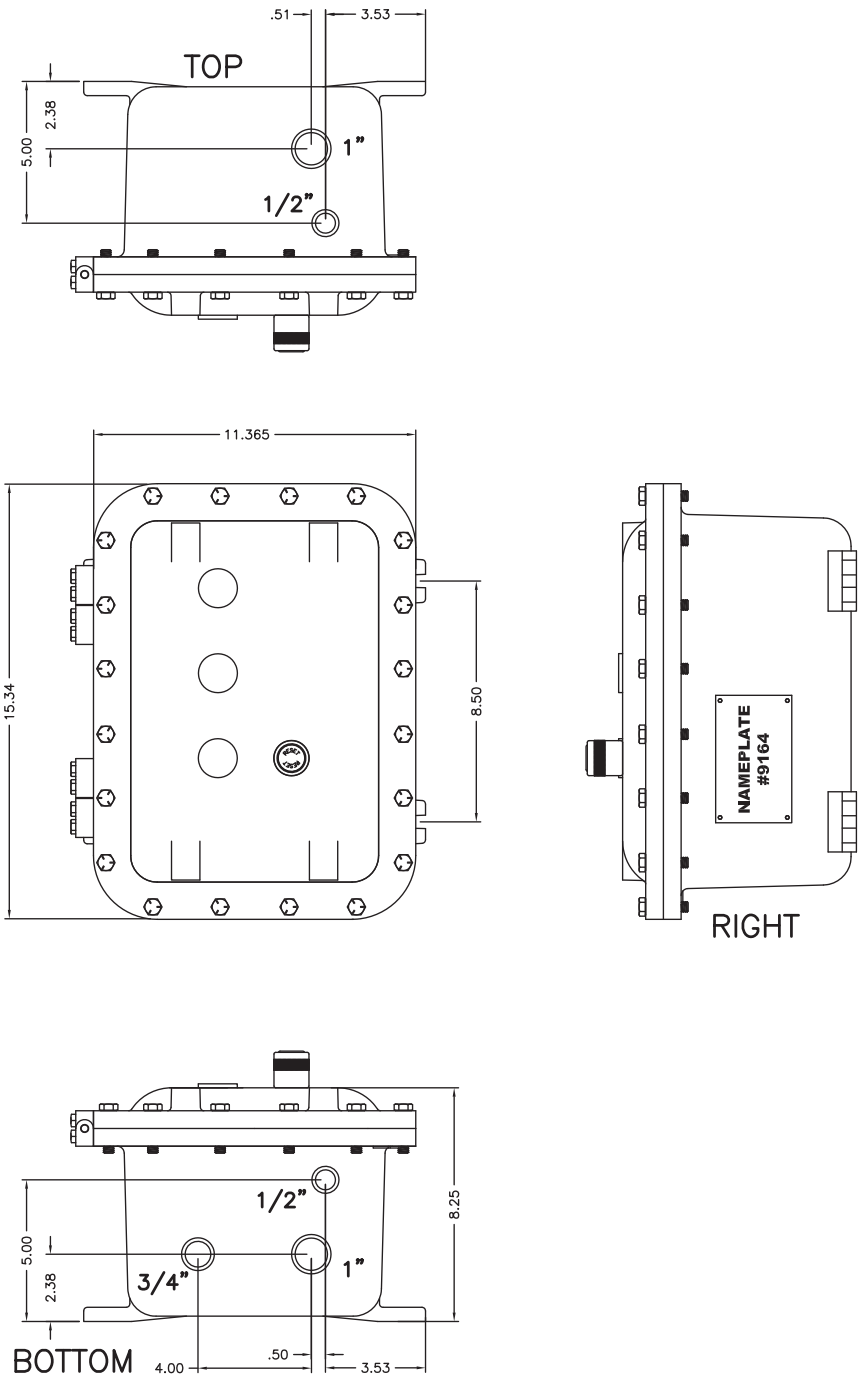

Data subject to change without notice.

CUSTOM CONTROL PANELS

DATA WORKSHEET AND REQUEST FOR QUOTE

REP*		ASE*		NEED QUOTE BY*	
TAM*		TSS*		REQUESTED SHIP DATE*	

1. CUSTOMER INFO:

1.1 COMPANY NAME		1.3 CUSTOMER PHONE	
1.2 CONTACT NAME		1.4 END USER NAME	

2. SUPPORTING PRODUCT INFO:

2.1 PRODUCT INFO*	
2.1.A ENTER P/N	

3. LOAD DATA:

3.1 MOTOR HP*		3.2 MOTOR FLA*		3.3 SERVICE FACTOR	
3.4 OTHER LOAD DATA					

4. POWER AND WIRING:

4.1 PHASE*		4.2 INCOMING VOLTAGE (V)*	
4.3 FREQUENCY*		4.4 PORTABLE GENERATOR POWER?*	

5. APPLICATION & ENVIRONMENT:

5.1 STARTING METHOD*		5.1.A OTHER STARTING METHOD?*			
5.2 ENCLOSURE TYPE* (METALIC TYPE 1, 12, ETC		5.3 SPECIFY AMBIENT TEMPERATURE IF UNIT INSTALLED OUTDOORS		5.4 SPECIFY ALTITUED IF UNIT INTSTALLED ABOVE 6,5000 FT	
5.5 REPLACING STANDARD NEMA SIZE?*		5.6 MAXIMUM NUMBER OF STARTS PER HOUR*		5.7 OTHER INFORMATION	

6. CIRCUIT PROTECTION:

6.1 PROTECTIVE DEVICE*	
6.1.A OTHER PROTECTIVE DEVICE	

7. CONTROL CIRCUIT:

7.1 COMMON CONTROL (SAME AS VOLTAGE TO MOTOR?)*		7.2 CPT REQUIRED?*	
7.3 TRANSFORMER WITH EXTRA VA CAPACITY?*			

8. COVER MOUNTED 22mm DEVICES: (IF YES, ENTER QUANTITIES)

22MM RESET PBS ARE CONSIDERED BASED ON PANEL CONFIGURATION. IF RESET PBS ARE NOT NEEDED, PLEASE SPECIFY.

8.1 START/STOP PUSH BUTTONG		8.2 H-O-A SELECTOR SWITCH		8.3 OFF-ON SELECTOR SWITCH		8.4 RUN LIGHT		8.5 POWER ON LIGHT		8.6 E-STOP PUSH BUTTON	
8.7 OTHER (SPECIFY)											

9. OTHER SPECIFICATIONS:

*REQUIRED FIELDS

WHEN COMPLETED, PLEASE CONTACT YOUR REQIONAL WEG SALES SPECIALIST AT 1-900-ASK-4WEG (275-4934) FOR DIRECTIONS ON SUBMITTAL FOR QUTATION. WEG CAN HELP YOU COMPLETE ANY FURTHER PERTINENT INFORMATION TO QUOTE.

SSW7000 Series – Medium Voltage Soft-Starter

WEG's SSWW7000 medium voltage solid-state soft starter is an industrial general-purpose starter package for starting and protecting medium voltage (MV) AC motors.

Designed to be rugged, reliable and safe, the SSW7000 is a simple and cost effective solution for demanding applications.

Key Features & Advantages

- Four 160 V and 2300 V models in stock (NEMA 12 and NEMA 3R) up to 3000 HP (higher voltages and powers available)
- Suitable for service entrance
- Motor protections active in both DOL and RUN modes eliminating the need for expensive motor protection relays for backup protection
- Pump control utilizes a specific algorithm for centrifugal pumps designed to minimize water hammer and pressure overshoots
- SoftPLC function with license-free software
- Flexible Torque Control (FTC) allows adjusting starting torque limit curve with three points (ideal for quadratic loads)
- Motor thermal protection via PT100 monitoring available (up to eight channels)

Accessories

- PT100 monitoring (8x channels)
- Network communication modules
- FLASH memory module

Features that make a difference:

- Assembled and stocked in the US
- NEMA 12 and NEMA 3R enclosures available
- Emergency DOL start capability (ATL bypass)
- Oriented startup for easy commissioning
- UL 347 listed
- Ground fault monitoring standard

Data subject to change without notice.

SSW7000C Catalog Number Sequence

SSW7000C	125	T	4	11	N2

Protection Degree
N2 = NEMA 12
N3 = NEMA 3R

Current Rating
125 = 125 Amps
180 = 180 Amps
250 = 250 Amps
360 = 360 Amps

Supply Phases
T = Three-phase

Rated Voltage
2 = 2.3 kV
4 = 4.16 kV

Single-Phase Control Supply
11 = 110 VAC, 1 ph

Chart intended as reference only and not to create part numbers.

Rating

Power Supply	Model	Rated Current	Motor Power		List Price	Multiplier
			HP[1]	kW		
NEMA 12						
2300V, 3PH, 60 Hz	SSW7000C125T211N2	125 A	550	410	**$55,750**	E3
	SSW7000C180T211N2	180 A	750	560	**$58,665**	
	SSW7000C250T211N2	250 A	1100	800	**$65,195**	
	SSW7000C360T211N2	360 A	1500	1100	**$67,430**	
4160V, 3PH, 60 Hz	SSW7000C125T411N2	125 A	1000	750	**$63,950**	
	SSW7000C180T411N2	180 A	1500	1100	**$67,195**	
	SSW7000C250T411N2	250 A	2000	1500	**$75,235**	
	SSW7000C360T411N2	360 A	3000	2250	**$77,980**	
NEMA 3R						
2300V, 3PH, 60 Hz	SSW7000C125T211N3	125 A	550	410	**$60,820**	E3
	SSW7000C180T211N3	180 A	750	560	**$63,725**	
	SSW7000C250T211N3	250 A	1100	800	**$70,255**	
	SSW7000C360T211N3	360 A	1600-	1190	**$73,020**	
4160V, 3PH, 60 Hz	SSW7000C125T411N3	125 A	1000	750	**$69,015**	
	SSW7000C180T411N3	180 A	1500	1100	**$72,250**	
	SSW7000C250T411N3	250 A	2000	1500	**$80,295**	
	SSW7000C360T411N3	360 A	3000	2250	**$83,550**	

Notes:
1) The motor power ratings given above are based on WEG 4-pole motors, 4.16kV, 60-Hz, PF=0.87, Eff=0.97, SF=1. For applications with high overloads or special starting conditions, contact WEG's sales force. Current Rating of SSW7000C must be calculated based on the information on load type, load speed/torque curve and required number of starts per hour.All models are available in 220V, 1Ph control voltage.

MEDIUM VOLTAGE STARTERS

MEDIUM VOLTAGE STARTERS

Options & Accessories

Reference	Description	Slot	List Price	Multiplier
Control accessories to install in Slots 1, 2 and 3				
IOE-04	Module for 8 temperature sensors PT100	1 and 2	**$2795**	E3
RS485-01	RS-485 serial communication module (Modbus)	3	**$240**	
RS232-01	RS-232C serial communication module (Modbus)		**$180**	
RS232-02	RS-232C serial communication module with switch to program the microcontroller FLASH memory		**$180**	
Anybus-CA Accessories to install in Slots 4				
PROFDP-05	Profibus DP interface module	4	**$1100**	E3
DEVICENET-05	Devicenet interface module			
ETHERNET/IP-05	EtherNet/IP interface module			
RS232-05	RS-232 interface module (passive) (Modbus)		**$290**	
RS485-05	RS485 interface module (passive) (Modbus)		**$360**	
Flash Memory Module to install in Slot 5 - Included in Standard Models				
MMF-01	FLASH memory module	5	**$71**	V1
Other Accessories				
HMI-01	Man Machine Interface – MMI (sold separately)	-	**$320**	V1
RHMIF-01	Frame kit for MMI (protection rate IP56)		**$69**	

Dimensions (in)

Same for NEMA 12 and NEMA 3R.

Data subject to change without notice.

Line Diagram

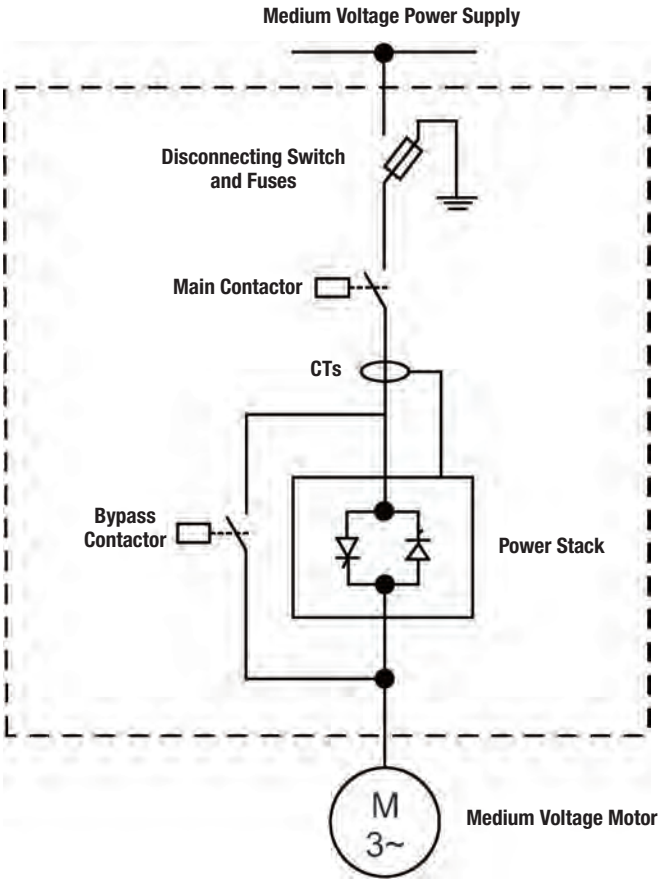

Protections

ANSI/IEEE C37.2	Function/Protection Feature	Standard	Option
19	Reduced voltage starting and bypass	■	
27	Undervoltage protection	■	
37	Undercurrent protection	■	
46	Phase-balance current protection	■	
47	Phase sequence	■	
48	Incomplete sequence	■	
50	Instantaneous overcurrent trip	■	
51	Overcurrent trip	■	
55	Power factor check	■	
59	Overvoltage	■	
81	Frequency check	■	
86	Lockout relay: electronic	■	
50N/51G	Ground fault detection instantaneous and fault-current	■	
49 & 38	Winding temperature and bearing temperature		□

MEDIUM VOLTAGE STARTERS

Standard Features

- Motor voltage: 2.3kV, 4.16kV
- Power: up to 3000 HP
- Protection degree: NEMA 12, NEMA 3R
- Operating interface (HMI) with graphic LCD
- Real time clock
- Main and bypass vacuum contactors
- Emergency direct on line (DOL) start capability (ATL bypass)
- Medium voltage fuses
- Power and control insulated by fiber optics
- SoftPLC Function
- License Free programming software SuperDrive and WLP (WEG Ladder Programmer)
- Motor thermal protection – PT100 (accessory), eight channels
- Ground Fault Protection – standard
- Five start modes
- Network communication boards (accessories): DeviceNet, Profibus-DP, Ethernet and Modbus, RS-232 or RS-485

Advantages

- Flexible Torque control
- Overload capacity of 400% for 20s. (2x / hour duty cycle)
- Management of Demand restrictions by the electric company
- Bump-less starting
- Motor protection
- Mechanical wear reduction
- Handles lower inrush current limitations of power supply

Special Features

- Clean assembly with easy accessibility to all components.
- Flexible Torque Control (FTC), by employing torque estimation using vector control principle and measurement of input voltage, output voltage and output current. This provides more accurate torque set-points, compared to estimating torque values only via current measurement.
- Active Protection offers complete motor protection in DOL START and RUN mode. This eliminates need for any expensive motor protection relays for backup protection.
- Ground Fault protection is standard.
- Thermal performance curves (TPCs) setup and selection that eliminates need for third party expensive protection relays.
- SoftPLC function with license-free software.
- Nickel plated busbars and bus-stub connections provide corrosion resistance and ensure proper electrical connection.
- Power connection terminals for TOP or BOTTOM motor connection (bottom only for NEMA 3R).
- Operator Interface (keypad, parameter setup) is identical to that of WEG's low voltage starter products.
- Successfully tested per International Building Code 2018 (IBC 2018) and California Building Code 2019 (CBC 2019).

CERTIFICATIONS

Data subject to change without notice.

Technical Data

Power Supply	Power voltage (R/1 L1, S/3L2, T/5L3)	Low voltage test: 500 VAC: (-60% to +10%) or (200 to 550 VCA) Models: 2300 VAC: (-60% to +10%) or (920 to 2530 VCA) 4160 VAC: (-60% to +10%) or (2760 to 4576 VCA)
	Frequency	(50 to 60 Hz): (±10%) or (45 to 66 Hz)
Capacity	Maximum number of starts	5 starts in 2 hours (1 start every 30 minutes)
	Start cycle	AC-53a; 4.5-30:50-2
Thyristors	Medium voltage SCR per power arm	2300 VAC: two (2) thyristors per per power stack 4160 VAC: two (2) coupled pairs of thyristors
	Reverse voltage peak on the arm	2300 VAC: 6.5 kV 4160 VAC: 13 kV
Protections	Protection by Hardware	DV/DT filter Active overvoltage protection on the thyristors
Control Supply	Control voltage	As per code of the SSW7000: 110 VAC: (-15% to10%) or (93.5 to 121 VAC) 230 VAC: (-15% to 10%) or (195.6 to 253 VAC)
	Frequency	(50 to 60 Hz): (±10%) or (45 to 66 Hz)
	Consumption	Continuous: 900 mA Peak: 9.5 A (during the closing of the Vacuum contactors)
Control	Method	Voltage ramp. Current limitation. Pump control. Torque control. Current ramp.
Inputs	Digital	6 insulated digital inputs, 24 VDC, programmable functions
	Analog	2 differential inputs insulated by differential amplifier; AI1 resolution: 12 bits, AI2 resolution: 11bits + signal, (0 to 10) V, (0 to 20) mA or (4 to 20) mA, Impedance: 400kQ for (0 to 10V), 500Q for (0 to 20 mA) or (4 to 20 mA), programmable functions
Outputs	Digital	3 NO/NC contact relays, 240 VAC, 1 A, programmable functions.
	Analog	2 insulated outputs, (0 to 10V) RL ± 10kQ (maximum load), 0 to 20 mA or 4 to 20 mA RL < 500Q, 11-bit resolution, programmable functions
Man Machine Interface	Standard	9 keys: Turn/Stop, Increase, Decrease, Rotation Direction, Jog, Local/Remote, right Soft key and left Soft key. Graphic LCD. It enables access to/change of all parameters.
Safety	Main protections	Under and Overcurrent and current unbalance. Under and Overvoltage and voltage unbalance. Under and Overtorque and Active overpower Phase loss. Reverse phase sequence Overtemperature in the power racks. Motor overload. Motor overtemperature (optional). External defect. Ground fault by voltage or current. Fault in the power racks. Fault in the power contactors. Faults in the control boards. Communication faults of MMI and between controls. Faults in the communication networks. Programming errors. For further details and more protections implemented, refer to the programming manual.
Enclosures	Protection Degree	NEMA 12, NEMA 3R
PC Connection for ProgrammingS	USB Connector	USB standard Rev. 2.0 (basic speed) USB plug type B "device" Interconnecting Cable: standard host/device shielded USB cable
Environmental Conditions	Temperature	-10° a 40°C
	Altitude	Up to 1000 m above sea level. For higher altitudes, contact our sales force.
	Humidity	Air relative humidity of 5 % to 90 % non-condensing.
Standards	NBR IEC 62271-200	High voltage controlgear and switchgear – Part 200: High voltage controlgear and switchgear in metal enclosure for voltages over 1 kV up to and including 52 kV
	IEC 62271-1	High-voltage switchgear and controlgear – Part 1: Common specifications
	IEC 60060-1	High-voltage test techniques. Part 1: General definitions and test requirements
	CISPR 11	Industrial, scientific and medical (ISM) radio-frequency equipment - electromagnetic disturbance characteristics - limits and methods of measurement
	IEC 61000-4-4	Electromagnetic compatibility (EMC) – Part 4: testing and measurement techniques – Sec. 4: electrical fast transient/burst immunity test. Basic EMB publication
	IEC 61000-4-18	Electromagnetic compatibility (EMC) – Part 4-18: testing and measurement techniques - damped oscillatory wave immunity test
	NBR IEC 60529	Protection rates for electric equipment enclosures (IP code)
	UL 347	Medium Voltage AC Contactors, Controllers and Control Centers
	UL 347B	Medium Voltage Motor Controllers

In-House Modifications

Motor Replate A-425
Electrical Add-Ons A-425
C-Flange Kits A-426
D-Flange Kits A-426
Drip Covers A-426
Cooling A-426
Bearings A-427
Mounting A-428
Environmental A-428

Factory Built Modifications

Bearings A-429
Cooling A-429
Degree of Protection A-429
Electrical Features A-430
Flanges A-430
Painting Plans A-430
Painting Plan Descriptions A-431
Special Shaft A-431
Terminal Box A-432
Testing A-432

Parts

C/C-DIN Flanges for Totally Enclosed Motors A-433
C Flanges for Open Motors A-435
D/F Flange Kits A-436
Drip Cover Kits A-438
W22 Terminal Box A-439
Brake Motor Parts A-441
Encoders A-443
Stub Shafts A-444
Encoder Cables A-444
Competitor C-Box to WEG W22 Frame Adapter A-445
Blower Kits A-445
Insulated Bearing Housing Endshields A-445
Terminal Block Kits A-446
Motor Sliding Bases A-433
Fans and Fan Covers A-434

Data subject to change without notice.

NEMA FRAME			56/140T/ 180T (Note 7)	210T	250T	280T	320T	360T	400T	440T	L440/500	580T
IEC FRAME			90/ 100L/112 (Note 7)	132S/M	160M/L	180M/L	200M/L	225S/M	250S/M	280S/M	315S/M	355M/L
REPLATE	**ADD CUSTOMER PART NUMBER AND / OR OTHER CHANGES SUCH AS VOLTAGE, HZ, ETC. (All W50 Mods are $40 NET)**											
MOD. NUMBER	NAMEPLATE											
N-10	Main Nameplate Change - Stainless Steel	NET	30	30	30	30	30	30	30	30	30	30
N-20	Additional Nameplate - Stainless Steel	NET	30	30	30	30	30	30	30	30	30	30
N-25	Additional Rating/Service - Adhesive Mylar only	NET	30	30	30	30	30	30	30	30	30	30

ELECTRICAL ADD-ON'S	**INSTALLATION OF SPACE HEATERS, THERMISTORS, THERMOSTATS & EXTENDING MOTOR LEADS**											
NEMA FRAME			56/140T/ 180T (Note 7)	210T	250T	280T	320T	360T	400T	440T	L440/500	580T
IEC FRAME			90/ 100L/112 (Note 7)	132S/M	160M/L	180M/L	200M/L	225S/M	250S/M	280S/M	315S/M	355M/L
E-25	120V/240V Space heater - XP motors	LIST	1010.00	1012.00	1103.00	1104.00	1104.00	1107.00	1197.00	1202.00	1202.00	1206.00
	120V/240V Space Heater	LIST	225.08	232.29	232.29	234.13	234.13	239.05	239.05	250.17	250.17	252.74
E-50	240V Space Heater (Operating on120V)	LIST	234.13	250.17	250.17	250.17	250.17	284.47	284.47	420.56	420.56	460.39
E-55	Bearing RTDS (DE and NDE)	LIST	N/A	N/A	N/A	N/A	1446.01	1446.01	1446.01	1446.01	1446.01	1446.01
E-60	Winding RTD's 100 Ohm Platinum (One Per phase - 3 lead PT100's)	LIST	792.77	792.77	792.77	792.77	792.77	883.55	883.55	883.55	883.55	974.33
E-70	Thermistors (One per phase @155ºC)	LIST	301.54	301.54	301.54	301.54	301.54	392.32	392.32	392.32	392.32	483.10
E-80	Thermostats (One per phase @155ºC)	LIST	225.89	225.89	287.99	287.99	287.99	378.77	378.77	378.77	378.77	445.04
E-95	Provision for vibration detector (drilled and tapped)	LIST	N/A	N/A	N/A	N/A	N/A	363.13	363.13	363.13	363.13	363.13
E-99	Installation of Stubshaft Only - (Only valid for Super Premium 280T & above) 5/8" stub shaft	LIST	N/A	N/A	N/A	345.00	345.00	345.00	475.00	475.00	475.00	475.00
E-100	Installation of Encoder - (Only valid for Super Premium 280T & above) Dynapar HSD38 1024PPR & 5/8" stub shaft	LIST	N/A	N/A	N/A	1431.90	1431.90	1431.90	1537.37	1537.37	1537.37	1537.37
	Installation of Encoder on VECTOR DUTY MOTORS (FRAMES 140- 250 - Dynapar HSD38 1024PPR with 5/8" bore)	LIST	1341.12	1341.12	1341.12	N/A	N/A	N/A	N/A	N/A	N/A	N/A
E-110	MODIFY BRAKE RECTIFIER TO ACCEPT 460V	LIST	223.27	223.27	223.27	223.27	N/A	N/A	N/A	N/A	N/A	N/A
E-115	WEG SCAN - (TEFC - GEN PRP - ONLY)	LIST	-	511.36	511.36	511.36	511.36	511.36	511.36	511.36	511.36	511.36

NEMA FRAME			56/140T/ 180T (Note 7)	210T	250T	280T	320T	360T	400T	440T	L440/500	580T
IEC FRAME			90/ 100L/112 (Note 7)	132S/M	160M/L	180M/L	200M/L	225S/M	250S/M	280S/M	315S/M	355M/L
C-FLANGE KIT	**INSTALLATION OF C-FLANGE KITS**											
C-90	Installation of C-FLANGE (IEC)	LIST	343.13	343.13	343.13	558.83	558.83	558.83	1530.39	1530.39	1836.47	1950.00
	"Installation of C-FLANGE (TEFC - GEN PRP)"	LIST	448.99	333.13	346.42	372.60	438.83	590.22	1276.12	1768.97	1768.97	1768.97
	Installation of C-FLANGE (IEEE-841)	LIST	471.20	471.20	471.20	602.01	602.01	602.01	1530.39	1836.47	1836.47	1950.00
	Installation of C-FLANGE (XP)	LIST	454.11	554.19	557.57	756.28	954.95	1005.92	1042.99	1128.38	N/A	N/A
	Installation of C-FLANGE (ODP)	LIST	388.27	388.27	388.27	642.37	642.37	642.37	1222.32	1234.53	N/A	N/A
D-FLANGE KIT	**INSTALLATION OF D-FLANGE KITS**											
D-120	Installation of D-FLANGE (IEC)	LIST	410.64	410.64	476.45	737.01	737.01	750.20	1105.00	1105.00	1950.00	2250.00
D-130	Installation of D-FLANGE (TEFC - GEN PRP)	LIST	353.85	353.85	484.25	743.52	743.52	959.86	1448.27	1950.00	1950.00	2250.00
D-135	Installation of D-FLANGE (IEEE-841)	LIST	N/A	429.05	429.05	743.52	743.52	743.52	1448.27	1950.00	1950.00	2250.00
D-140	Installation of D-FLANGE (XP)	LIST	489.39	489.39	561.09	905.08	1044.05	1044.05	1286.01	1286.01	N/A	N/A
D-150	Installation of D-FLANGE (ODP)	LIST	N/A	N/A	475.11	581.54	723.74	1524.53	1524.53	1524.53	N/A	N/A

DRIP COVERS	**INSTALLATION OF DRIP COVER (RAIN CAP)**											
DC-160	Drip Cover (TEFC / XP)	LIST	254.85	277.07	320.25	363.44	406.59	484.19	681.01	825.45	1058.13	1290.78
	Drip Cover (ODP)	LIST	276.26	280.53	378.21	442.35	443.38	528.58	570.26	657.97	N/A	N/A

COOLING	**ALUMINUM FAN MATERIAL CHANGE OUT AND INSTALLATION OF BLOWER KIT (FORCED VENTILATION)**											
F-180	Fan Material (ALUMINUM) Note #4	LIST	1250.55	1287.20	1287.15	1315.82	1422.28	1627.06	1717.84	1867.77	2147.10	3174.81
F-190	Forced Ventilation: Blower Cooling (w/o Encoder) (Not valid for 48 & 56 frames)	LIST	1258.63	1371.79	1439.89	1485.12	1593.32	1821.96	1821.96	3915.06	3915.06	3915.06
	Forced Ventilation: Blower Cooling (w/ Encoder) (Not valid for 48 & 56 frames)	LIST	4337.60	4624.41	4782.99	4896.15	4950.84	5495.06	5955.95	6552.15	6817.40	7417.96
F-200	Cast Iron Fan Cover	List	291.98	291.98	Standard	Standard	Standard	Standard	Standard	Standard	Standard	Standard

continued on next page

Data subject to change without notice.

NEMA FRAME			56/140T/ 180T (Note 7)	210T	250T	280T	320T	360T	400T	440T	L440/500	580T
IEC FRAME			90/ 100L/112 (Note 7)	132S/M	160M/L	180M/L	200M/L	225S/M	250S/M	280S/M	315S/M	355M/L
BEARINGS	**BEARING CHANGE OUTS & SHAFT GROUNDING MODIFICATION**											
B-200	Ball to Roller Bearing Conversion Note #3 & #5	LIST	N/A	N/A	527.09	616.23	645.92	1024 .27	1337.85	1812.35	1890.17	1890.17
B-210	Roller to Ball conversion Note #3 & #6	LIST	N/A	N/A	N/A	N/A	N/A	N/A	1270 .28	1636 .34	1636 .34	1636.34
B-220	Convert to Insulated Bearing - NDE ONLY	LIST	564.72	568.44	673.10	852.65	852.65	1347.85	1347.85	1721.28	1888.88	1888.88
B-225	Convert to 2RS (sealed bearings)	LIST	210.73	221.4	277.54	312.21	346.87	835.42	1077.96	N/A	N/A	N/A
B221	Convert to Ceramic Bearing (NDE Only)	LIST	-	-	-	-	-	-	2444.00	3665.00	4879.00	4879.00
B-230*	External AEGIS shaft Grounding Ring - DE ONLY	LIST	258.44	258.44	258.44	262.57	262.57	273.74	273.74	402.23	530.73	871.87
B-231	Internal AEGIS Ring for W22 w/o a Flange	LIST	N/A	N/A	582.00	590.00	610.00	782.00	893.00	1143.00	1250.00	1250.00
	Internal AEGIS Ring for W22 with any Flange	LIST	336.00	366.00	582.00	590.00	610.00	782.00	893.00	1143.00	1250.00	1250.00
	Internal AEGIS Ring for W22 JP/JM	LIST	N/A	N/A	582.00	590.00	610.00	782.00	893.00	1143.00	1250.00	1250.00
	Internal AEGIS Ring for W22-IEEE 841 (All Mtg)	LIST	355.00	366.00	582.00	590.00	610.00	782.00	893.00	1143.00	1250.00	1250.00
	Internal AEGIS Ring for ODP w/o Flange	LIST	N/A	N/A	N/A	N/A	N/A	782.00	893.00	1143.00	1250.00	1250.00
	Internal AEGIS Ring for ODP with C-Flange	LIST	N/A	N/A	501.00	N/A	N/A	782.00	893.00	1143.00	1250.00	1250.00
	Internal AEGIS Ring for ODP JP/JM	LIST	N/A	N/A	501.00	N/A	N/A	782.00	893.00	1143.00	1250.00	1250.00
	Internal AEGIS RING For Rolled Steel Motors	LIST	336.00	366.00	582.00	N/A	N/A	N/A	N/A	N/A	N/A	N/A
B-250*	Installation of Helwig Grounding Brush (Includes Brush and Brush Holder - DE only)	LIST	N/A	N/A	N/A	N/A	N/A	316.56	316.56	341.12	341.12	341.12
B-251	Internal Helwig Shaft Ground	LIST	N/A	N/A	N/A	N/A	N/A	782.00	893.00	1143.00	1143.00	1143.00
B-255	High Frequency Terminal Box Grounding Strap (For use with VFD driven motors)	LIST	486.00	486.00	486.00	486.00	486.00	486.00	608.00	608.00	608.00	608.00
B-260	Insulated ODE End Bell conversion (TEFC 360 frames and above - W22 only, Excludes IEEE841)	LIST	N/A	N/A	N/A	N/A	N/A	1091.90	1246.15	1513.72	STD	STD
B-270[2]	Low Temp(<-30°C) includes New bearings with Aeroshell 22 Grease***	LIST	794.91	794.91	794.91	899.05	934.35	1443.46	1534.02	2274.66	2274.66	2274.66
B-280[2]	High Temp Bearing Grease change out (High Temp Grease / -20°C to 90°C) - Requires Bearing Change out	LIST	N/A	N/A	370.34	465.36	509.78	946.26	1036.82	1777.46	1777.46	1830.08

**Class II DIV2 removed from nameplate*
*******-50°C to 50°C – Also requires addition of mods for Space Heaters, AL Fan and SS Drains. IEEE841 requires Low Temp Inpro Seals below -28°C*
Notes: 1) 140T and larger
2) W22 and IEEE841 lines only.

NEMA FRAME			56/140T/ 180T (Note 7)	210T	250T	280T	320T	360T	400T	440T	L440/500	580T
IEC FRAME			90/ 100L/112 (Note 7)	132S/M	160M/L	180M/L	200M/L	225S/M	250S/M	280S/M	315S/M	355M/L
MOUNTING	**TERMINAL BOX**											
M-280	F1 to F2 Mounting Conversion (Cast Iron 3 phase motors only)	LIST	136.17	136.17	181.56	181.56	181.56	181.56	272.35	272.35	272.35	272.35
M-290	Convert Footed Motor to Round Body (Cast Iron Only)	LIST	544.69	544.69	544.69	544.69	544.69	635.47	635.47	635.47	817.04	817.04
M-300	Auxiliary ternminal box (Not valid for 48 & 56 frames)	LIST	188.33	188.33	204.70	204.70	204.70	214.18	214.18	214.18	214.18	214.18
M-310	Dual Auxiliary Terminal Box Configuration (Seperating Temp. Sensors and Space heaters if specified)	LIST	N/A	N/A	N/A	N/A	N/A	352.21	352.21	352.21	352.21	352.21
M-320	Install terminal block in terminal box (Cast Iron 3 Phase only - leads not connected)	LIST	244.58	258.29	285.07	285.07	337.67	532.11	532.11	643.62	736.42	736.42
M-330	Drill and Tap Shaft end	LIST	1623.00	1623.00	1674.00	1674.00	1774.00	1774.00	1992.00	1992.00	1992.00	1992.00

ENVIRONMENTAL	**ENVIRONMENTAL CONDITIONS**											
EV-300	Stainless Steel Breather Drains	LIST	328.21	328.21	418.99	418.99	418.99	509.78	509.78	509.78	600.56	600.56
EV-310	Stainless Steel Hardware (Only external bolts - End bell , Terminal box cover & Fan cover)	LIST	551.68	551.68	551.68	551.68	621.51	621.51	621.51	621.51	782.12	782.12
EV-320	Grounding Provisions on Frame (TEFC cast iron only)	LIST	251.40	251.40	251.40	251.40	382.68	382.68	382.68	Standard	Standard	Standard
EV-330	Tropicalization/Anti-Fungal Protection	LIST	178.07	223.46	223.46	265.36	356.15	356.15	488.83	488.83	488.83	488.83
EV-335	IP56 Modification (GEN PRP TEFC / IEC)	LIST	1031.01	1031.01	1031.01	1031.01	1031.01	1121.79	1121.79	1121.79	1121.79	1121.79
	IP56 Modification (IEEE 841)	LIST	81.00	93.00	128.00	186.00	244.00	314.00	372.00	430.00	430.00	430.00
EV-342	IP65 Modification (IEEE 841)	LIST	98.00	112.00	154.00	223.00	293.00	377.00	447.00	517.00	517.00	517.00
EV-345	IP56 Modification (XP)	LIST	98.00	112.00	154.00	223.00	293.00	377.00	447.00	517.00	517.00	517.00
EV-350	Sealant on Joints	LIST	198.32	198.320	198.320	198.32	305.87	305.87	305.87	413.41	413.41	413.41
EV-355	Slinger (GEN PRP TEFC ONLY)	LIST	89.97	90.78	94.69	98.8	98.8	125	-	-	-	-
EV-380	Top Coat Paint Color Change (per below color chart only)	LIST	1060.34	1060.34	1060.34	1060.34	1060.34	1060.34	1060.34	1060.34	1072.63	1103.35
EV-400	Addition of Rodent Screens (Cast iron ODP motors only)	LIST	N/A	N/A	740.00	971.00	971.00	971.00	971.00	971.00	971.00	971.00

NOTES:
*1. CONSIDER TENV VECTOR DUTY MOTOR (IF RATING IS AVAILABLE) = *%*
2. NOT AVAILABLE AS MODIFICATION = N/A
3. CONTACT FOR QUOTE WITH LOAD DATA FOR EVALUATION
4. MACHINING REQUIRED
5. ROLLER BEARINGS SIZES NOT AVAILABLE FOR 210T FRAMES AND SMALLER
6. STOCK PRODUCT NOT AVAILABLE WITH ROLLER BEARINGS BELOW NEMA 400T - See API 661 line below 440T frame.
7. SOME MODIFICATIONS MAY NOT BE AVAILABLE FOR FRAMES SMALLER THAN 140 NEMA OR 112 IEC , CONTACT WEG FOR QUOTE.
8. PRICING IS SUBJECT TO FUTURE UPDATES THAT MAY ALTER WHAT IS REFLECTED IN PRINTED MATERIALS.

AVAIL TOP COAT COLORS

RAL 5009 - BLUE

MUNSELL N1 - BLACK

RAL 6002 - GREEN

RAL 7022 - DARK GRAY

RAL 9010 - WHITE

RAL 3002 - RED

Data subject to change without notice.

Bearings

NEMA FRAME SERIES	48	56	-	140T	180T	210T	250T	280T	320T	360T	400T	440T	L440/500	580
IEC Frame Series	-	-	63 UP 80	90	100/112	132	160	180	200	225	250	280	315	355
Ball to Roller (IV, VI, VIII P.) D.E.:	n/a	n/a	n/a	n/a	n/a	566	645	772	863	974	n/a	n/a	n/a	n/a
ZZ Bearings (Double shielded): Added when manufacturing	std	std	std	std	std	std	96	321	632	n/a	n/a	n/a	n/a	n/a
2 RS Bearing (D.E. and N.D.E.) Added when manufacturing	38	38	38	38	61	67	207	293	973	1364	n/a	n/a	n/a	n/a
Insulated (Hybrid) NDE Bearing	n/a	n/a	n/a	417	671	700	2163	2318	2755	n/a	n/a	n/a	n/a	n/a
Insulated Bearing Housing NDE Endshield	n/a	n/a	n/a	n/a	n/a	n/a	n/a	n/a	n/a	1064	1239	1539	1539	2265

Cooling

NEMA FRAME SERIES	48	56	-	140T	180T	210T	250T	280T	320T	360T	400T	440T	L440/500	580
IEC FRAME SERIES			63 UP 80	90	100/112	132	160	180	200	225	250	280	315	355
Fan Material : - Aluminum Added when manufacturing	n/a	n/a	n/a	64	110	118	132	151	175	218	255	298	348	n/a
Fan Material : - Cast Iron Added when manufacturing	n/a		n/a	34	50	61	79	107	112	185	185	216	300	527
Fan Material : - Bronze Added when manufacturing	n/a	n/a	n/a	238	532	865	1068	1493	1508	2627	2627	2627	2627	2971
Forced Ventilation (TEBC) :	n/a	n/a	n/a	1406	1513	1575	1965	2286	2448	2921	3139	4275	5773	7383
TEAO Added when manufacturing	54	54	54	54	81	94	97	176	176	370	370	380	439	520
Drip Cover Added when manufacturing	21	21	55	55	58	82	98	141	166	191	191	234	234	330
Textile Fan Cover Added when manufacturing	n/a	n/a	n/a	61	63	90	108	156	183	220	220	n/a	n/a	n/a

Degree of Protection

NEMA FRAME SERIES	48	56	-	140T	180T	210T	250T	280T	320T	360T	400T	440T	L440/500	580
IEC FRAME SERIES	-	-	63 UP 80	90	100/112	132	160	180	200	225	250	280	315	355
TEFC IP55 with Lip Seal	33	33	33	33	58	76	95	113	132	151	175	213	249	502
TEFC IP55 with Oil Seal	n/a	n/a	55	55	85	104	112	133	143	171	200	231	268	-
TEFC IP55 with Labyrinth seal or Nilos Ring	n/a	n/a	196	196	220	220	299	315	354	463	511	511	579	1380
TEFC IP56 w/ Oil Seals	n/a	n/a	n/a	75	118	176	267	383	498	441	655	1724	2041	-
TEFC IP56 w/ W3Seals (labyrinth)	n/a	n/a	n/a	230	277	401	501	643	861	825	1023	2143	2674	3815
TEFC IP65 w/ Oil Seals	n/a	n/a	n/a	75	118	176	267	383	498	441	655	1724	2041	-
TEFC IP65 w/ Taconite (labyrinth) Seals	n/a	n/a	n/a	167	205	303	398	528	709	659	857	1954	2394	3366
TEFC IP65 w/ W3seals (labyrinth)	n/a	n/a	n/a	230	277	401	501	643	861	825	1023	2143	2674	3815
TEFC IP66 w/ W3seals (labyrinth)	n/a	n/a	n/a	273	344	496	662	853	1112	1185	1515	3310	4009	5687

Electrical Special Features - Added when manufacturing

NEMA FRAME SERIES	48	56	-	140T	180T	210T	250T	280T	320T	360T	400T	440T	L440/500	580
IEC FRAME SERIES	-	-	63 UP 80	90	100/112	132	160	180	200	225	250	280	315	355
Thermistors (1/phase) PTC:	n/a	n/a	142	142	142	142	142	142	142	142	142	142	142	142
Thermostats (1/phase) NC:	n/a	n/a	142	142	142	142	142	142	142	142	142	142	142	142
Bearing RTD's PT100 (1/bearing)	n/a	n/a	n/a	n/a	n/a	n/a	1215	1215	1215	1215	1215	1215	1215	1215
Winding RTD's PT100 (1/phase):	n/a	n/a	1052	1052	1052	1052	1052	1052	1052	1052	1052	1052	1052	1052
Space Heater	n/a	n/a	37	37	37	37	54	54	54	109	109	109	109	217
Class of Insulation : -"F"	Add 5% to motor list price								Add 3% to motor list price					
Class of Insulation : -"H"	Add 10% to motor price													
Epoxy varnish impregnation Enclosed motors only	Add 5% to motor price													
Above 600 V (1000 Max.)	Add 10% to motor price													

Flanges

NEMA FRAME SERIES		48	56	-	140T	180T	210T	250T	280T	320T	360T	400T	440T	L440/ 500	580
IEC FRAMES SERIES		-	-	63 UP 80	90	100/112	132	160	180	200	225	250	280	315	355
FLANGE TYPE	Enclosure	List Price													
"C" Flange	TEFC	28	28	28	28	38	51	68	99	121	442	491	606	716	1623
	ODP	28	28	-	34	38	51	68	85	100	394	446	560	-	-
	Explosion Proof	-	-	61	61	70	76	103	147	182	665	736	1384	1384	-
"D" Flange	TEFC	-	-	50	59	70	79	117	136	192	637	762	915	1051	1863
	ODP	-	-	-	-	-	-	107	126	170	537	685	855	-	-
	Explosion Proof	-	-	-	89	89	103	130	189	246	736	1067	1311	1577	2364

Paint Plans - Factory Build Adder

NEMA FRAME SERIES	-	140T	180T	210T	250T	280T	320T	360T	400T	440T	L440/500	580
IEC FRAMES SERIES	63 UP 80	90	100/ 112	132	160	180	200	225	250	280	315	355
Painting Plan	List Price											
202	45	58	94	120	196	228	246	308	335	402	447	745
203	58	85	138	188	290	344	384	509	553	696	808	1,269
211	106	114	133	228	467	547	597	775	828	1003	1075	1113
212	122	133	171	277	585	692	779	1026	1121	1410	1577	1661
Internal Epoxy Painting	45	58	94	120	196	228	246	308	335	402	447	745

Data subject to change without notice.

Painting Plan Description

Painting Plan	Recommended Uses	Surface Preparation Grade	PRIMER		INTERMEDIATE		FINISH COAT		ADHERENCE GRADE ASTM
			Paint	Film Thickness (μm)	Paint	Film Thickness (μm)	Paint	Film Thickness (μm)	D-3359
201A	Non aggressive environments; Not recommended for direct exposure to solvents, alkalis and acid vapors	Sa 2 ½	Synthetic alkyd	20 – 55	-	-	Synthetic alkyd enamel	40 – 60	3B to 5B
222E	Aggressive sheltered industrial environments; Chemical, pulps and paper industries, resistant to acid steams, alkalis and solvents vapors	Sa 2 ½	Alkydium Nitrocellulose	20 - 55	-	-	Epoxy polyamide enamel	100 – 140	3A to 5A
222P	Aggressive sheltered or non-sheltered industrial environments; Chemical, mining, pulp and paper industries, resistant to acid steams, alkalis and solvents vapors; Indicated to food processing motors – USA and Europe	Sa 2 ½	Alkydium Nitrocellulose	20 - 55	-	-	Polyaspartic Aliphatic	90 - 120	3A to 5A
203A	Environments low aggressiveness; Not recommended for direct exposure to solvents, alkalis and acid vapors	Sa 2 ½	Synthetic alkyd	20 – 55	Synthetic powdered alkyd	30 a 45	Synthetic alkyd enamel	30 – 45	3B to 5B
211E	Painting of equipment, structures in general subject to moderate and high aggressive level such as: pulp and paper plants, steel and iron and chemical industries	Sa 2 ½	Polyamide Epoxy	90 - 130	-	-	Polyamide Epoxy	90 - 130	3A to 5A
211P	Painting of equipment, structures in general subject to moderate and high aggressive level such as: pulp and paper plants, steel and iron and chemical industries	Sa 2 ½	Polyamide Epoxy	90 - 130	-	-	Aliphatic polyurethane enamel	65 – 90	3A to 5A
212E	Non sheltered marine environment; Resistant to acid, alkalis and solvent spills	Sa 2 ½	Zinc ethyl silicate	70 - 90	Epoxy polyamide	90 – 130	Polyamide Epoxy	90 – 130	3A to 5A
212P	Non sheltered marine environment; Resistant to acid, alkalis and solvent spills	Sa 2 ½	Zinc ethyl silicate	70 - 90	Epoxy polyamide	90 – 130	Aliphatic polyurethane enamel	65 – 90	3A to 5A

Special Shaft

NEMA FRAME SERIES	48	56	-	140T	180T	210T	250T	280T	320T	360T	400T	440T	500	580
IEC FRAMES SERIES	-	-	63 UP 80	90	100/112	132	160	180	200	225	250	280	315	355
Second Shaft End (standard dimension)	n/a	n/a	60	72	87	101	104	189	189	392	396	407	752	879
Threaded center hole in the shaft end	n/a	n/a	33	33	41	51	85	136	155	std	std	std	-	-
420 Stainless steel shaft end	Add 10% to motor list price													
315 Stainless steel shaft end	Add 15% to motor list price													
Special Shaft														
Special Shaft Diameter (Type "A" mod)	n/a	n/a	58	58	87	130	151	189	209	392	396	407	752	879
Special Shaft Length (Type "B" mod)	n/a	n/a	63	63	96	113	120	208	216	446	450	473	821	987
Special Shaft Diameter & Length (Type "C" mod)	n/a	n/a	72	72	125	141	158	249	262	574	579	628	965	1117
Special Shaft Diameter, Length & Tapered (Type "D" mod)	n/a	n/a	79	79	130	156	174	271	288	646	654	716	1023	1254
Balance - Reduced	n/a	n/a	n/a	33	79	91	100	125	134	156	167	188	507	616
Balance - Special	n/a	n/a	n/a	58	87	133	159	180	217	250	283	317	846	1044

Terminal Box*

NEMA FRAME SERIES	48	56	-	140T	180T	210T	250T	280T	320T	360T	400T	440T	L440/ 500	580
IEC FRAMES SERIES	**-**	**-**	**63 UP 80**	**90**	**100/112**	**132**	**160**	**180**	**200**	**225**	**250**	**280**	**315**	**355**
Cable Gland - Plastic	n/a	n/a	10	10	14	14	22	22	22	-	-	-	-	-
Cable Gland - Brass	n/a	n/a	33	33	50	50	182	182	182	567	567	567	567	714
Threaded Plug	n/a	n/a	6	6	9	9	18	18	18	22	22	22	22	44
Terminal Block (6 pin):	n/a	n/a	9	9	14	23	23	41	41	197	197	380	380	753
Additional terminal box	n/a	n/a	n/a	30	30	41	41	41	41	59	59	59	70	118
Without Terminal Box	n/a	n/a	18	18	22	22	33	33	33	45	45	47	58	70

* Not valid for Hazardous Location Motors

Testing:

NEMA FRAME SERIES	48	56	-	140T	180T	210T	250T	280T	320T	360T	400T	440T	L440/ 500	380
IEC FRAMES SERIES	**-**	**-**	**63 UP 80**	**90**	**100/112**	**132**	**160**	**180**	**200**	**225**	**250**	**280**	**315**	**355**
Routine Test - Unwitnessed	-	-	381	381	381	513	513	513	513	622	622	718	877	877
Routine Test - Witnessed	-	-	1215	1215	1215	1427	1427	1427	1427	1683	1683	1903	2368	2368
Type Test - Unwitnessed	-	-	586	586	586	769	769	769	769	952	952	1208	1768	1768
Type Test - Witnessed	-	-	1419	1419	1419	1632	1632	1632	1632	1939	1939	2195	2618	2618
Vibration Test	-	-	183	183	183	205	205	205	205	285	285	403	559	559
Noise Level Test	-	-	213	213	213	242	242	242	242	322	322	462	638	638

Test Description:

Routine Test

– Winding resistance check (at cold)
– Locked Rotor test (current and absorbed power)
– No-load test (current and absorbed power)
– Hi-pot
– Insulation resistance
– Accessories check for continuity (if applicable)

Type Test

– Winding resistance check (at cold)
– Locked Rotor test (torque, current and absorbed power)
– Load test, including temperature rise with constant output power at full load)
– Breakdown Torque test
– No-load test (current and absorbed power)
– Hi-pot
– Insulation resistance
– Accessories check for continuity (if applicable)

Vibration Test

– Vibration measure on as many as 6 points, depending on the mechanical envelope of the motor allowing access to all the reading points
– Test performed with half key on the shaft
– Performed with motor on an elastic mounting base (rigid base when requested)

Noise Test

– Performed at no load in an acoustic chamber
– Measurements at 1m (~ 3.3ft) distance from the motor
– Readings:
- Total sound pressure level of the motor at 8 points, in dB(A)
- Bearings sound pressure level in dB(A)
- Frequency spectrum of the global noise for the point with the most intense reading, at rated voltage

Data subject to change without notice.

C/C-DIN FLANGES FOR TOTALLY ENCLOSED MOTORS

Nema Frames - Cast Iron - TEFC - W22

Frame	Flange Size	Bearing Size	C-Flange Kit	
			Catalog Number	List Price
143/5	FC-149	205	FLC-E140-UBC	$85
182/4	FC-184	207	FLC-E180-UBC-W22	$145
213/5	FC-184	308	FLC-E210-UBC	$150
254/6	FC-184	309	FLC-E250-W22	$195
284/6	FC-228	311	FLC-E280	$290
324/5	FC-279	312	FLC-E320	$440
364/5	FC-279	314	FLC-E360-314-W22	$575
404/5	FC-279	314	FLC-E400-314	$620
	FC-279	316	FLC-E400-316	$620
444/5 445/7 447/9	FC-355	314	FLC-E440-314	$830
	FC-355	314	FLC-E440-314-VENT *	$1,660
	FC-355	319	FLC-E440-319	$830
	FC-355	322	FLC-E440-322	$830
	FC-355	322	FLC-E440-322-VENT *	$1,743
L447/9	FC-355	314	FLC-EL440-314-VENT *	$1,800
	FC-355	322	FLC-EL440-322-VENT *	$1,861
504/5	FC-368	314	FLC-E500-314-W22	$1,200
	FC-368	319	FLC-E500-319-W22	$1,200
	FC-368	322	FLC-E500-322-W22	$1,200
586/7	FC-368	314	FLC-E580-314	$1,465
	FC-368	314	FLC-E580-314-VENT *	$1,905
	FC-368	322	FLC-E580-322	$1,650
	FC-368	322	FLC-E580-322-VENT *	$1,980
	FC-368	324	FLC-E580-324	$1,650

** Ventilated for improved Drive end bearing cooling*

NEMA Frames - IEEE 841 - W22

Frame	Flange Size	Bearing Size	C-Flange Kit	
			Catalog Number	List Price
143/5	FC-149	205	FLC-IE140	$250
182/4	FC-184	207	FLC-IE180-W22	$285
213/5	FC-184	308	FLC-IE210	$300
254/6	FC-184	309	FLC-IE250-W22	$325
284/6	FC-228	311	FLC-IE280	$365
324/5	FC-279	312	FLC-IE320	$550
364/5	FC-279	314	FLC-E360-314-W22	$575
404/5	FC-279	314	FLC-E400-314	$620
	FC-279	316	FLC-E400-316	$620
444/5 445/7 447/9	FC-355	314	FLC-E440-314	$830
	FC-355	314	FLC-E440-314-VENT *	$1,660
	FC-355	319	FLC-E440-319	$830
	FC-355	322	FLC-E440-322	$830
	FC-355	322	FLC-E440-322-VENT *	$1,743
L447/9	FC-355	314	FLC-EL440-314-VENT *	$1,800
	FC-355	322	FLC-EL440-322-VENT *	$1,861
504/5	FC-368	314	FLC-E500-314-W22	$1,200
	FC-368	319	FLC-E500-319-W22	$1,200
	FC-368	322	FLC-E500-322-W22	$1,200
586/7	FC-368	314	FLC-E580-314	$1,465
	FC-368	314	FLC-E580-314-VENT *	$1,905
	FC-368	322	FLC-E580-322	$1,650
	FC-368	322	FLC-E580-322-VENT *	$1,980
	FC-368	324	FLC-E580-324	$1,650

** Ventilated for improved Drive end bearing cooling*

NEMA Frames - W01 Rolled Steel Motors - TEFC

Frame	Flange Size	Bearing Size	C-Flange Kit	
			Catalog Number	List Price
143/5	FC-149	205	FLC-E140-S	$85
182/4	FC-184	206	FLC-E180-S	$145
213/5	FC-184	208	FLC-E210-S	$150
254/6	FC-184	309	FLC-E250-S	$195

C/C-DIN FLANGES FOR TOTALLY ENCLOSED MOTORS

NEMA Frames - Explosion Proof Motors - modifications must be performed by a UL Certified Service Center

Frame	Flange Size	Bearing Size	C-Flange Kit	
			Catalog Number	List Price
143/5	FC-149	205	FLC-X140	$120
182/4	FC-184	307	FLC-X180	$201
213/5	FC-184	308	FLC-X210	$214
254/6	FC-184	309	FLC-X250-W2`1X	$291
284/6	FC-228	311	FLC-X280-W21X	$517
324/5	FC-279	312	FLC-X320-W21X	$663
364/5	FC-279	314	FLC-X360-314	$992
404/5	FC-279	314	FLC-X360-314	$992
	FC-279	217	FLC-X400-217	$1,210
444/5 445/7 447/9	FC-355	314	FLC-X440-314	$1,508
	FC-355	219	FLC-X440-219	$1,508
	FC-355	319	FLC-X440-319	$1,508

Metric (IEC) Frames - General Purpose - TEFC

Frame	Flange Size	Bearing Size	C-DIN Flange Kit	
			Catalog Number	List Price
63	C-90	201	FLC-IM63DIN-AL	$39
71	C-105	202	FLC-IM71DIN-BC-W22	$43
80	C-120	204	FLC-IM80DIN-AL-BC	$45
90	C-140	205	FLC-IM90DIN-AL-UBC	$85
100	C-160	206	FLC-IM100DIN-AL-UBC	$128
112	C-160	207	FLC-IM112DIN-UBC-W22	$145
132	C-200	308	FLC-IM132DIN-AL-UBC	$150
160	C-250	309	FLC-IM160DIN-W22	$195

Metric (IEC) Frames - Cast Iron - General Purpose - TEFC

Frame	Flange Size	Bearing Size	NEMA C-Flange Kit	
			Catalog Number	List Price
160	FC-184	309	FLC-IM160-W22	$195
180	FC-228	311	FLC-IM180	$290
200	FC-228	312	FLC-IM200	$440
225	FC-279	314	FLC-E360-314-W22	$575
250	FC-279	314	FLC-E400-314	$620
280	FC-355	314	FLC-E440-314	$830
	FC-355	316	FLC-IM280-316	$830
315	FC-368	314	FLC-E500-314-W22	$1,030
	FC-368	319	FLC-E500-319-W22	$1,030
355	FC-368	316	FLC-E580-316	$1,650
	FC-368	322	FLC-E580-322	$1,650

Fractional Motors - W01 Rolled Steel - TEFC

Frame	Flange Size	Bearing Size	C-Flange Kit	
			Catalog Number	List Price
48 W56	FC-149	203	FLC-E48/W56-S	$80
56 56H	FC-149	203	FLC-E56-203-FC149-S	$85
	FC-149	204	FLC-E56-204-S	$85
	FC-149	205	FLC-E140-S	$85

Data subject to change without notice.

C FLANGES FOR OPEN MOTORS

NEMA Frames - W01 Rolled Steel - ODP

Frame	Flange Size	Bearing Size	C-Flange Kit	
			Catalog Number	List Price
143/5	FC-149	205	FLC-0140-S	$85
182/4	FC-184	206	FLC-0180-S	$145
213/5	FC-184	208	FLC-0210-S	$150
254/6	FC-184	309	FLC-0250-S	$195

NEMA Frames - Cast Iron - ODP - W40

Frame	Flange Size	Bearing Size	C-Flange Kit		
			ODP*	W40	List Price
254/6	FC-184	309	FLC-0250 **	FLC-0250-W40 **	$195
284/6	FC-228	311	FLC-0280	FLC-0280-W40	$290
324/6	FC-279	312	FLC-0320	FLC-0320-W40	$440
364/5 404/5	FC-279	314	FLC-0360-314	FLC-0360/400-314-W40	$575
	FC-279	316	FLC-0400-316	FLC-0360/400-316-W40	$952
444/5 447/9	FC-355	314	FLC-0440-314	-	$830
	FC-355	319	FLC-0440-319	-	$830
444/5	FC-355	314	-	FLC-0444/5-314-W40	$830
	FC-355	319	-	FLC-0444/5-319-W40	$830
447/9	FC-355	314	-	FLC-0447/9-314-W40	$830
	FC-355	319	-	FLC-0447/9-319-W40	$830

** Legacy Models*

*** Does not meet NEMA BA dimension for Flanged motors*

Fractional Motors - W01 Rolled Steel - ODP

Frame	Flange Size	Bearing Size	C-Flange Kit	
			Catalog Number	List Price
48 W56	FC-149	203	FLC-048/W56-S	$67
56 56H	FC-149	203	FLC-056-203-FC149-S	$85
	FC-149	204	FLC-056-204-S	$85
	FC-149	205	FLC-0140-S	$85

D/F FLANGE KITS

NEMA Frames - Cast Iron - TEFC - W22

Frame	Flange Size	Bearing Size	D-Flange Kit	
			Catalog Number	List Price
143/5	FD-254	205	FLD-E140-UBC	$98
182/4	FD-254	207	FLD-E180-W22	$171
213/5	FD-254	308	FLD-E210-UBC	$184
254/6	FD-317	309	FLD-E250-W22	$244
284/6	FD-317	311	FLD-E280	$318
324/5	FD-406	312	FLD-E320	$465
364/5	FD-406	314	FLD-E360-314-W22	$620
404/5	FD-508	314	FLD-E400-314	$765
	FD-508	316	FLD-E400-316	$765
444/5 445/7 447/9	FD-508	314	FLD-E440-314	$932
	FD-508	314	FLD-E440-314-VENT *	$1,771
	FD-508	319	FLD-E440-319	$932
	FD-508	322	FLD-E440-322	$932
	FD-508	322	FLD-E440-322-VENT *	$1,864
L447/9	FD-508	314	FLD-EL440-314-VENT *	$1,890
	FD-508	322	FLD-EL440-322-VENT *	$1,987
504/5	FD-558	314	FLD-E500-314-W22	$1,350
	FD-558	319	FLD-E500-319-W22	$1,350
	FD-558	322	FLD-E500-322-W22	$1,350
586/7	FD-762	314	FLD-E580-314	$2,130
	FD-762	314	FLD-E580-314-VENT *	$2,343
	FD-762	322	FLD-E580-322	$2,130
	FD-762	322	FLD-E580-322-VENT *	$2,450
	FD-762	324	FLD-E580-324	$2,130

** Ventilated for improved Drive end bearing cooling*

NEMA Frames - IEEE 841

Frame	Flange Size	Bearing Size	D-Flange Kit	
			Catalog Number	List Price
213/5	FD-254	308	FLD-IE210	$350
254/6	FD-317	309	FLD-IE250-W22	$425
284/6	FD-317	311	FLD-IE280	$490
324/5	FD-406	312	FLD-IE320	$785
364/5	FD-406	314	FLD-E360-314-W22	$620
404/5 444/5 445/7 447/9	FD-508	314	FLD-E400-314	$765
	FD-508	316	FLD-E400-316	$765
	FD-508	314	FLD-E440-314	$932
	FD-508	314	FLD-E440-314-VENT *	$1,771
	FD-508	319	FLD-E440-319	$932
	FD-508	322	FLD-E440-322	$932
	FD-508	322	FLD-E440-322-VENT *	$1,864
L447/9	FD-508	314	FLD-EL440-314-VENT *	$1,890
	FD-508	322	FLD-EL440-322-VENT *	$1,987
504/5	FD-558	314	FLD-E500-314-W22	$1,350
	FD-558	319	FLD-E500-319-W22	$1,350
	FD-558	322	FLD-E500-322-W22	$1,350
586/7	FD-762	314	FLD-E580-314	$2,130
	FD-762	314	FLD-E580-314-VENT *	$2,343
	FD-762	322	FLD-E580-322	$2,130
	FD-762	322	FLD-E580-322-VENT *	$2,450
	FD-762	324	FLD-E580-324	$2,130

** Ventilated for improved Drive end bearing cooling*

Data subject to change without notice.

D/F FLANGE KITS, *continued*

NEMA Frames - Explosion Proof Motors - modifications must be performed by a UL Certified Service Center

Frame	Flange Size	Bearing Size	D-Flange Kit	
			Catalog Number	List Price
143/5	FD-254	205	FLD-X140	$154
182/4	FD-254	307	FLD-X180	$210
213/5	FD-254	308	FLD-X210	$291
254/6	FD-317	309	FLD-X250-W21X	$534
284/6	FD-317	311	FLD-X280-W21X	$637
324/5	FD-406	312	FLD-X320-W21X	$895
364/5	FD-406	314	FLD-X360-314	$1,141
404/5	FD-508	314	FLD-X400-314	$1,338
	FD-508	217	FLD-X400-217	$1,338
444/5 445/7 447/9	FD-508	314	FLD-X440-314	$1,878
	FD-508	219	FLD-X440-219	$1,878
	FD-508	319	FLD-X440-319	$1,878

Metric (IEC) Frames - Cast Iron - TEFC

Frame	Flange Size	Bearing Size	FF-Flange Kit	
			Catalog Number	List Price
63	FF-115	201	FLF-IM63-AL	$76
71	FF-130	202	FLF-IM71-BC-W22	$72
80	FF-165	204	FLF-IM80-AL-BC	$96
90	FF-165	205	FLF-IM90-AL-UBC	$98
100	FF-215	206	FLF-IM100-AL-UBC	$169
112	FF-215	207	FLF-IM112-UBC-W22	$171
132	FF-265	308	FLF-IM132-AL-UBC	$184
160	FF-300	309	FLF-IM160-W22	$245
180	FF-300	311	FLF-IM180	$318
200	FF-350	312	FLF-IM200	$465
225	FF-400	314	FLF-IM225-W22	$620
250	FF-500	314	FLF-IM250	$765
280	FF-500	314	FLF-IM280-314	$932
	FF-500	316	FLF-IM280-316	$932
315	FF-600	314	FLF-IM315-314-W22	$1,350
	FF-600	319	FLF-IM315-319-W22	$1,350

D FLANGES FOR OPEN MOTORS

NEMA Frames - Cast Iron - ODP - W40

Frame	Flange Size	Bearing Size	D-Flange Kit		
			ODP*	W40	List Price
284/6	FD-317	311	FLD-0280	FLD-0280-W40	$318
324/6	FD-406	312	FLD-0320	FLD-0320-W40	$465
364/5	FD-406	314	FLD-0360-314	FLD-0360-314-W40	$620
404/5	FD-508	314	FLD-0400-314	FLD-0400-314-W40	$765
	FD-508	316	FLD-0400-316	FLD-0400-316-W40	$765
444/5 447/9	FD-508	314	FLD-0440-314	-	$932
	FD-508	319	FLD-0440-319	-	$932
444/5	FD-508	314	-	FLD-0444/5-314-W40	$932
	FD-508	319	-	FLD-0444/5-319-W40	$932
447/9	FD-508	314	-	FLD-0447/9-314-W40	$932
	FD-508	319	-	FLD-0447/9-319-W40	$932

** Legacy Models*

Drip Cover Kits for TEFC Motors

	Frame	W22 - Cast Iron	W01 - Rolled Steel	List Price
NEMA	48 W56	-	DRCV-E48/W56-S	$45
	56 140T	-	DRCV-O140-S (for Plastic Fan Cover) DRCV-E56/140-S (for Steel Fan Cover)	$53
	140T	DRCV-E140	-	$89
		-	DRCV-O140-S	$53
	180T	DRCV-E180	DRCV-E180-S	$128
	210T	DRCV-E210	DRCV-E210-S	$136
	250T	DRCV-E250-W22	DRCV-E250-S	$167
	280T	DRCV-E280-W22	-	$220
	320T	DRCV-E320-W22	-	$344
	360T	DRCV-E360-W22	-	$393
	400T	DRCV-E360-W22	-	$393
		DRCV-E400-W22	-	$479
	440T	DRCV-E440-W22	-	$819
	500	-	-	$819
		DRCV-EL440-W22	-	$952
	L440T	DRCV-EL440-W22	-	$952
	580	DRCV-E580-W22	-	$1,145
METRIC	90	DRCV-E140	-	$89
	100	DRCV-E100	-	$89
	112	DRCV-E180	-	$95
	132	DRCV-E210	-	$131
	160	DRCV-E250-W22	-	$152
	180	DRCV-E280-W22	-	$220
	200	DRCV-E320-W22	-	$344
	225	DRCV-E360-W22	-	$393
	250	-	-	$393
		DRCV-E400-W22	-	$479
	280	DRCV-E440-W22	-	$819
	315	-	-	$819
		DRCV-EL440-W22	-	$952
	355	DRCV-E580-W22	-	$1,145

Drip Cover Kits for ODP Motors

Frame	Cast Iron - ODP *	List Price	W40 - Cast Iron	List Price	W01 -Rolled Steel	List Price
48 W56	-	-	-	-	DRCV-E48/W56-S	$45
C56 56 A56 B56 D56 E56 F56 G56	-	-	-	-	DRCV-O56-S	$45
140T	-	-	-	-	DRCV-O140-S	$53
180T	-	-	-	-	DRCV-O180-S	$128
210T	-	-	-	-	DRCV-O210-S	$136
250T	DRCV-ODP250	$152	DRCV-O250-W40	$152	DRCV-O250-S	$167
280T	DRCV-ODP280	$220	DRCV-O280-W40	$220	-	-
320T	DRCV-ODP320	$366	DRCV-O320-W40	$366	-	-
360T **	DRCV-ODP360/400	$410	DRCV-O360-W40	$410	-	-
360T *** 400T	DRCV-ODP360/400	$410	DRCV-O360FL-400-W40	$410	-	-
440T **	DRCV-ODP440	$613	DRCV-O444/5-W40	$613	-	-
440T ***	-	-	DRCV-O444/5FL-W40	$613	-	-

** Legacy Models*
*** Footed motors only*
**** Footless motors only*

Data subject to change without notice.

W22 Terminal Box - American Standard NPT

IEC Frame Size	NEMA Frame Size	Holes	Part Number	List Price
90 100	143/5	NPT 3/4"	TBX-E140-W22	$74
112 132	182/4 213/5	NPT 1"	TBX-E180/210-W22	$104
160 180	254/6 284/6	NPT 1 1/2"	TBX-E250/280-W22	$155
200	324/6	NPT 2"	TBX-E320-W22	$226
225 250	364/5 404/5	NPT 3"	TBX-E360/400-3-W22	$342
280	444/5	2 x NPT 3"	TBX-E440-3-W22	$523
315S/M	445/7 447/9 504/5	2 x NPT 3"	TBX-E447/505-3-W22	$749
315L 355M/L	L447/9 586/7	For cable Plate	TBX-EL447/9-586/7-W2	$1,898
355A/B	588/9	-	Contact Parts	-

Two Auxiliary Terminal Boxes installed to the Main Terminal Box - F1 configuration

Two Auxiliary Terminal Boxes installed to the Main Terminal Box - F2 configuration

Auxiliary Terminal Boxes

For W22 only

Therm Protection Auxiliary Terminal Boxes are designed to be installed on the left side of the Main Terminal Box when F1 (right side when F2)

Frame	Therm Protection Auxiliary T-Box Model	List Price
140T	AUXTBOXF1W22-A	$135
180T		
210T		
250T	AUXTBOXF1W22-B AUXTBOXF2W22-B	$171
280T		
320T		
360T	AUXTBOXF1W22-B AUXTBOXF2W22-B	$171
400T		
440T		
L440T		
500		
580		

F1 and F2 on model number identifies the appropriate use for the auxiliary t-box.

If separate Auxiliary Terminal boxes are required for Thermal Sensors and Space Heaters, frames 360T and above offer a second Auxilary Terminal Box just for the Space Heater. The Space Heater Auxiliary Terminal Box is designed to be installed on the opposite side of the Main Terminal Box from the Therm Protection Auxiliary Box.

Frame	Space Heater Auxiliary T-Box Model	List Price
360T	AUXTBOXF1W22-D AUXTBOXF2W22-D	$270
400T		
440T		
L440T		
500		
580		

W22 Terminal Box Adapter

IEC Frame Size	NEMA Frame Size	Part Number	List Price
225 250	364/5, 404/5	TBX-ADPT-360/400-W22	$660
280	444/5	TBX-ADPT-444/5-W22	$777
315S/M	445/7, 447/9, 504/5	TBX-ADPT-444/500-W22	$921
315L	L447/9	TBX-ADPT-L440-W22	$1,080
355	586/7 588/9	TBX-ADPT-580-W22	$1,273

W01 Rolled Steel Terminal Boxes

NEMA Frame Size	Thread size	Part Number	List Price
56 56H	NPT 1/2”	TBX-E56-S	$40
143/5	NPT 3/4”	TBX-E140-S	$62
182/4	NPT 3/4”	TBX-E180-S	$73
213/5	NPT 1”	TBX-E210-S	$108
254/6	NPT 1 1/4”	TBX-E250-S	$154

Data subject to change without notice.

W22 Brake Motor Rebuild Kit

Kit composition: Stator brake, Seal, Cube, Retaining ring, Key and Rotor brake.

Frame	SIZE	Nominal Braking Torque	205 Vcc	
			Part Number	List Price
143/5	10	16 Nm	BRAKE-E140-W22	$588
182/4	14	60 Nm	BRAKE-E180-W22	$972
213/5	16	80 Nm	BRAKE-E210-W22	$1,410
254/6	18	150 Nm	BRAKE-E250-W22	$1,985
284/6	20	260 Nm	BRAKE-E280-W22	$3,454
324/5	25	400 Nm	BRAKE-E320-W22	$5,453

Braking Disk for W22 Brake Motor

Kit composition: Disc, Cube, Key and Retaining Ring

Frame	Part Number	List Price
143/5	BDK-BM140-W22	$422
182/4	BDK-BM180-W22	$643
213/5	BDK-BM210-W22	$770
254/6	BDK-BM250-W22	$934
284/6	BDK-BM280-W22	$1,610
324/5	BDK-BM320-W22	$2,814

Fan Cover for W22 Brake Motor

Kit composition: Fan Cover and Fixing bolts.

Frame	Part Number	List Price
143/5	FCO-BM140-W22	$185
182/4	FCO-BM180-W22	$222
213/5	FCO-BM210-W22	$222
254/6	FCO-BM250-W22	$406
284/6	FCO-BM280-W22	$406
324/5	FCO-BM320-W22	$611

Brake Handle for W22 Brake Motor

Kit composition: Handle and Bolts

Brake Lever - W22 Manual Unlock		
Frame	Part Number	List Price
143/5	BRKHDL-BM140-W22	$78
182/4	BRKHDL-BM180-W22	$127
213/5	BRKHDL-BM210-W22	$179
254/6	BRKHDL-BM250-W22	$236
284/6	BRKHDL-BM280-W22	$453
324/5	BRKHDL-BM320-W22	$602

Rectifier for W22 Brake Motor

Kit composition: Bridge Rectifier and Bolts

Brake Rectifier			
Type	Voltage	Part Number	List Price
BRIDGE RECTIFIER	220V	REC-BM220V	$148
HALF BRIDGE RECTIFIER	360V	REC-BM440V	
	440V		
	575V	REC-BM575V	

Terminal Box for W22 Brake Motor

Kit composition: Terminal box, Fixing bolts, Rubber gaskets, Terminal box cover, Cover fixing bolts.

IEC Frame Size	NEMA Frame Size	H	Part Number	List Price
90 - 100	143/5	NPT	TBX-BM140-W22	$135
112 - 132	182/4 - 213/5	NP	TBX-BM180/210-W22	$177
160 - 180	254/6 - 284/6	NPT 1 1/2"	TBX-BM250/280-W22	$191
200	324/6	NPT 2"	TBX-BM320-W22	$238

** Stocked terminal boxes are RAL5009 Blue*

Data subject to change without notice.

Encoders

Motor requires Stub-shaft for installation of the encoder (exception to the TENV Vector Duty motors - page A-417)

WEG Catalog Number	MFG Catalog Number	MFG	Specification	List Price
ECHSD38-D	HSD38102484370	Dynapar	PPR:1024/ Bore size: 5/8"/ Format: Differential Bi-Directional A/Anot,B/Bnot,Z/Znot/ Output: 5-26Vin, 5-26V differential line driver out (7272 chip set)/ Termination:10 pin MS connector/ Housing: aluminum, slotted tether with cover kit (basket). Optical	**$1,418**
ECHS35M-A	HS35MYX6CCU0DA00	Avtron	PPR:1024/ Bore size: 5/8"/ Format: Differential Bi-Directional A/Anot,B/Bnot,Z/Znot/ Output: 5-24Vin, 5-24V differential line driver out (7272 chipset)/ Termination:10 pin connector/ Housing: aluminum, slotted tether. Magnetic	**$2,150**

Different encoders may be available upon inquiry

Encoders TEBC Motors

Motor Frame	WEG Catalog Number	MFG Catalog Number	MFG	Specification	List Price
140T 180T	ECHSD38-D	HSD38102484370	Dynapar	PPR:1024/ Bore size: 5/8"/ Format: Differential Bi-Directional A/Anot,B/Bnot,Z/Znot/ Output: 5-26Vin, 5-26V differential line driver out (7272 chip set)/ Termination:10 pin MS connector/ Housing: aluminum, slotted tether with cover kit (basket). Optical	**$1,418**
210T 250T 280T 320T	ECHS35RTEBC-D	HS35R1024837X40	Dynapar	PPR:1024/ Bore size: 5/8"/ Format: Differential Bi-Directional A/Anot,B/Bnot,Z/Znot/ Output: 5-26Vin, 5-26V differential line driver out (7272 chip set)/ Termination:10 pin connector W/ PIGTAIL. Housing: aluminum, slotted tether.	**$1,845**
360T 400T 440T 500 580	ECHS35RTEBC-D	HS35R1024837X40	Dynapar	PPR:1024/ Bore size: 5/8"/ Format: Differential Bi-Directional A/Anot,B/Bnot,Z/Znot/ Output: 5-26Vin, 5-26V differential line driver out (7272 chip set)/ Termination:10 pin connector W/ PIGTAIL. Housing: aluminum, slotted tether.	**$1,845**

Stub Shafts

TEFC W22 Motors

Catalog Number	Applicable to W22*:	Description	List Price
STUBSHAFT-B-TEFC	180T 210T 250T 280T 320T	M12X1.75 Thread for use with 5/8" bore encoder	$240
STUBSHAFT-C-TEFC	360T 400T 440T 580	M20X2.5 Thread for use with 5/8" bore encoder	$240
STUBSHAFT-D-TEFC	L440T 500		$270

IMPORTANT: These stub shafts might not be compatible with W21 motors
*Super Premium W22 frames 284T and above have NDE shaft drilled and tapped to receive stub shaft. Any other will require the NDE shaft to be drilled and tapped

TENV Motors (Vector Duty)

Current design of Vector Duty motors do not require stub shaft for encoder installation. The motor is being supplied with dual flange and extented NDE shaft for this purpose (5/8" diameter)

TEBC Motors

Catalog Number	Applicable to W22*:	Description	List Price
STUBSHAFT-A-TEFC	140T	M8X1.25 THREAD for use with 5/8" bore encoder	$220
STUBSHAFT-B-TEFC	180T 210T 250T 280T 320T	M12X1.75 Thread for use with 5/8" bore encoder	$240
STUBSHAFT-C-TEFC	360T 400T 440T L440T 500 580	M20X2.5 Thread for use with 5/8" bore encoder	$240

Encoder Cables

Catalog Number	Description	List Price
ENCCBLMS-10	10 FT. ENCODER CABLE WITH 10 PIN MS CONNECTOR	$232
ENCCBLMS-20	20 FT. ENCODER CABLE WITH 10 PIN MS CONNECTOR	$413
ENCCBLMS-30	30 FT. ENCODER CABLE WITH 10 PIN MS CONNECTOR	$454
ENCCBLMS-50	50 FT. ENCODER CABLE WITH 10 PIN MS CONNECTOR	$1,200

Insulated Bearing Housing Endshields

Catalog Number	Frame Series	Bearing Size	List Price
NDE-E360T-314-I-W22	360T	6314	$2,150
NDE-E400T-314-I-W22	400T	6314	$2,150
NDE-E440T-314-I-W22	440T	6314	$2,592
NDE-E440T-316-I-W22	440T	6316	$2,592
NDE-E440T-319-I-W22	440T	6319	$2,592
NDE-EL440T-314-I-W22	L440	6314	$3,220
NDE-EL440T-319-I-W22	L440	6319	$3,220
NDE-E580-314-I-W22	580	6314	$3,371
NDE-E580-319-I-W22	580	6319	$3,371

Data subject to change without notice.

Competitor C-Box to WEG W22 Frame Adapter

The users report that during installation of new replacement motors, it is far easier to reuse the old junction box rather than break the box loose from the conduit. This becomes difficult however when going from one brand to another, as all manufacturers have a different bolt pattern and bolt size. This adapter plate simplifies this process and makes it easier than ever before.

Catalog Number	Description	List Price
WEG280-SIEM	ADAPTER PLATE WEG/Siemens 280T	$181
WEG320-SIEM	ADAPTER PLATE WEG/Siemens 320T	$202
WEG360-400-SIEM	ADAPTER PLATE WEG/Siemens 360T & 400T	$224
WEG444/5-SIEM	ADAPTER PLATE WEG/Siemens 444/5T	$228
WEG445/7-447/9-SIEM	ADAPTER PLATE WEG/Siemens 445/7T & 447/9TT	$263
WEG180-USEM	ADAPTER PLATE WEG/USEM 180T	$177
WEG250-280-USEM	ADAPTER PLATE WEG/USEM 250T & 280T	$181
WEG320-USEM	ADAPTER PLATE WEG/USEM 320T	$202
WEG360-400-USEM	ADAPTER PLATE WEG/USEM 360T & 400T	$224
WEG445/7-447/9-USEM	ADAPTER PLATE WEG/USEM 445/7T & 447/9TT	$263
WEG250-280-REL	ADAPTER PLATE WEG/Reliance 250T & 280T	$181
WEG320-REL	ADAPTER PLATE WEG/Reliance 320T	$202
WEG360-400-REL	ADAPTER PLATE WEG/Reliance 360T & 400T	$224
WEG444/5-REL	ADAPTER PLATE WEG/Reliance 444/5T	$228
WEG445/7-447/9-REL	ADAPTER PLATE WEG/USEM 445/7T & 447/9TT	$263

Blower Kits for TEFC-to-TEBC Motor Conversion - W22 (200-240/380-415/440-460 with 6 leads)

Frame (NEMA/IEC)	Catalog Number	List Price
140T/90	BLK-E140	$1,149
180T/112	BLK-E180	$1,260
210T/132	BLK-E210	$1,452
250T/160	BLK-E250-W22*	$1,573
280T/180	BLK-E280*	$1,658
320T/200	BLK-E320*	$1,821
360T/225	BLK-E360-W22	$2,038
400T/250	BLK-E400-W22	$2,159
444/5T	BLK-E444/5-W22	$2,561
445/7T 447/9T/280	BLK-E445/7-447/9-W22	$2,561
500/315	BLK-EL449/500-W22	$3,025
L440T/315L	BLK-EL449/500-W22	$3,025
580/355	BLK-E580-W22	$3,632

** These kit require NDE Endshield be changed for proper fit See parts below.*

NDE Endshield for Blower kit 250-320T frames

Catalog Number	Frame	Description	List Price
16503637	250T	TEFC-TEBC conversion End Shield -W22	$140.40
16503738	250T	TEFC-TEBC conversion End Shield - IEEE841	$500.36
16503739	280T	TEFC-TEBC conversion End Shield -W22	$211.92
16503740	280T	TEFC-TEBC conversion End Shield - IEEE841	$501.52
16503741	320T	TEFC-TEBC conversion End Shield -W22	$283.12
16503742	320T	TEFC-TEBC conversion End Shield - IEEE841	$535.68

Terminal Block Kits

IEC Frames	NEMA Frames*	Catalog Number	Bolt Thread	List Price
63	-	TERMBLCK-W22-63-100	M4	$35
71	-			
80	-			
90	140T			
100	-			
112	180T	TERMBLCK-W22-112/132	M5	$52
132	210T			
160	250T	TERMBLCK-W22-160/180	M6	$86
180	280T			
200	320T	TERMBLCK-W22-200	M8	$151
225	360T	TERMBLCK-W22-225/250	M10	$280
250	400T			
280	440T	TERMBLCK-W22-280	M12	$533
315	500	TERMBLCK-W22-315S/M	M12	$533
315L	L440T	TERMBLCK-W22-355M/L + Adapter TERMBLCK-SUP-580	M16	$1,032
355	580			

* NEMA Frames should require an adapter plate for the terminal block installation

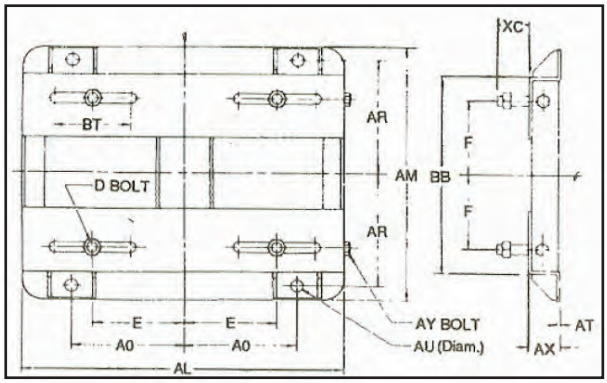

Motor Sliding Bases

Frame	Catalog Number	Style	AR	AU	BT	Shipping Weight (approx lbs)	List Price
143T	SMB-143T	A	3 3/8	3/8	3	5	$73
145T	SMB-145T	A	3 7/8	3/8	3	6	$73
182T	SMB-182T	A	4 1/4	1/2	3	9	$87
182T	SMB-182TA2	A2	4 1/4	1/2	3	9	$120
184T	SMB-184T	A	4 3/4	1/2	3	10	$87
184T	SMB-184TA2	A2	4 3/4	1/2	3	10	$120
213T	SMB-213T	A	4 3/4	1/2	3 1/2	14	$118
215T	SMB-215T	A	5 1/2	1/2	3 1/2	15	$118
254T	SMB-254T	B2	6 5/8	5/8	4	17	$220
256T	SMB-256T	B2	7 1/2	5/8	4	18	$220
284T	SMB-284T	B2	7 1/2	5/8	4 1/2	21	$240
286T	SMB-286T	B2	8 1/4	5/8	4 1/2	22	$240
324T	SMB-324T	B2	8 1/2	3/4	5 1/4	31	$321
326T	SMB-326T	B2	9 1/4	3/4	5 1/4	32	$321
364T	SMB-364T	B2	9 1/8	3/4	6	44	$410
365T	SMB-365T	B2	9 5/8	3/4	6	45	$410
404T	SMB-404T	B2	9 7/8	7/8	7	55	$600
405T	SMB-405T	B2	105/8	7/8	7	61	$600
444T	SMB-444T	B2	11	7/8	7 1/2	76	$746
445T	SMB-445T	B2	12	7/8	7 1/2	78	$746
447T	SMB-447T	B2	13 3/4	7/8	7 1/2	89	$1,023
449T	SMB-449T	B2	16 1/4	7/8	7 1/2	95	$1,023
504T	SMB-504	C	12 1/2	1	-	108	$1,422
505T	SMB-505	C	13 1/2	1	-	135	$1,422
586T	SMB-580	Pair of Slide Rails	13	4 3/8	-	183	$3,504

Data subject to change without notice.

W22 Plastic Fan Guide (New Motors Only - Contact Parts for Field Replacements)

For "S" Standard Efficiency Level

IEC Frame Size	NEMA Frame Size	POLE	Catalog Number	List Price
63	-	All	FAN-E63	$6
71	-	All	FAN-E71	$7
80	-	All	FAN-E80	$8
90	143/5	All	FAN-FD56/140-17MM	$12
100	-	All	FAN-E100	$18
112	182/4	2	FAN-E180W2102P	$12
		4/6/8	FAN-E180W2104P	$19
132	213/5	2	FAN-E2102P	$17
		4/6/8	FAN-E2104P	$24
160	254/6	2	FAN-E2502P	$12
		4/6/8	FAN-E2504P	$24
180	284/6	2	FAN-E5802P	$12
		4/6/8	FAN-E5804P	$24
200	324/6	2	FAN-E3202P	$18
		4/6/8	FAN-E3204P	$27

For "P" High Efficiency Level

IEC Frame Size	NEMA Frame Size	POLE	Catalog Number	List Price
63	-	All	FAN-E63	$6
71	-	All	FAN-E71	$7
80	-	2	FAN-E71	$7
		4/6/8	FAN-E80	$8
90	143/5	2/4	FAN-E80	$8
		6/8	FAN-FD56/140-17MM	$12
100	-	All	FAN-E100	$18
112	182/4	2/4	FAN-E180W2102P	$12
		6/8	FAN-E180W2104P	$19
132	213/5	2/4	FAN-E180W2102P	$12
		6/8	FAN-E2104P	$24
160	254/6	2	FAN-E2502P	$12
		4/6/8	FAN-E2504P	$24
180	284/6	2	FAN-E2502P	$12
		4/6/8	FAN-E2504P	$24
200	324/6	2	FAN-E3202P	$18
		4/6/8	FAN-E3204P	$27

continued on next page

W22 Plastic Fan Guide - *continued*

For "T" Nema Prem. Efficiency Level

IEC Frame Size	NEMA Frame Size	POLE	Catalog Number	List Price
63	-	All	FAN-E63	$6
71	-	All	FAN-E71	$7
80	-	2	FAN-E71	$7
		4/6/8	FAN-E80	$8
90	143/5	2/4	FAN-E80	$8
		6/8	FAN-FD56/140-17MM	$12
100	-	All	FAN-E100	$18
112	182/4	2/4	FAN-E180W2102P	$12
		6/8	FAN-E180W2104P	$19
132	213/5	2/4	FAN-E180W2102P	$12
		6/8	FAN-E2104P	$24
160	254/6	2/4	FAN-E2502P	$12
		6/8	FAN-E2504P	$24
180	284/6	2/4	FAN-E2502P	$12
		6/8	FAN-E2504P	$24
200	324/6	2/4	FAN-E3202P	$18
		6/8	FAN-E3204P	$27

For "S" and "P" Standard and High Efficiency Level (360 frame and up)

IEC Frame Size	NEMA Frame Size	POLE	Catalog Number	List Price
225S/M	364/5	2/4	FAN-E360/4002P-W22	$59
		4/6/8	FAN-11482642-W22	$74
250S/M	404/5	2	FAN-E360/4002P-W22	$59
		4/6/8	FAN-11482642-W22	$74
280S/M	444/5 445/7 447/9	2	FAN-E444-505/2P-W22	$63
		4/6/8	FAN-E440/500468P-W22	$89
315S/M	504/5	2	FAN-11482679-W22	$66
		4/6/8	FAN-E444-505/2P-W22	$63
315L	-	2	FAN-11482679-W22	$66
		4/6/8	N/A	
-	L447/9	2	FAN-11482679-W22	$66
		4/6/8	N/A	
355M/L	586/7	2	FAN-11482679-W22	$66
		4/6/8	N/A	
355A/B	588/9	All	N/A	

continued on next page

Data subject to change without notice.

W22 Plastic Fan Guide - *continued*

For "T" Nema Premium Efficiency Level (360 and up)

IEC Frame Size	NEMA Frame Size	POLE	Catalog Number	List Price
225S/M	364/5	2	FAN-E360/4002P-W22	$59
		4	FAN-E444-505/2P-W22	$63
		6/8	FAN-11482642-W22	$74
250S/M	404/5	2	FAN-E360/4002P-W22	$59
		4	FAN-11482679-W22	$66
		6/8	FAN-11482642-W22	$74
280S/M	444/5 445/7 447/9	2	FAN-E444-505/2P-W22	$63
		4	FAN-11482642-W22	$74
		6/8	FAN-E440/500468P-W22	$89
315S/M	504/5	2	FAN-E444-505/2P-W22	$63
		4	FAN-11482642-W22	$74
		6/8	FAN-E440/500468P-W22	$89
315L	-	2	FAN-11482679-W22	$66
		4	FAN-E440/500468P-W22	$89
		6/8	N/A	
-	L447/9	2	FAN-11482679-W22	$66
		4/6/8	N/A	
355M/L	586/7	2	FAN-11482679-W22	$66
		4	FAN-11482679-W22	$66
		6/8	N/A	
355A/B	588/9	All	N/A	

W22 Aluminum Fan Guide (New Motors Only - Contact Parts for Field Replacements)

For "S" Standard Efficiency Level

IEC Frame Size	NEMA Frame Size	POLE	Catalog Number	List Price
63	-	All	FAN-E63-AL	$55
71	-	All	FAN-E71-AL	$70
80	-	All	FAN-E80-AL	$88
90	143/5	All	FAN -E1404P-AL	$116
100	-	All	FAN-E100-AL	$161
112	182/4	2	FAN-E180W21024P-AL	$112
		4/6/8	FAN-E1804P-AL-B	$223
132	213/5	2	FAN-E210-2/8P-AL	$147
		4/6/8	FAN-E210-4/6P-AL	$313
160	254/6	2	FAN-E2502-4P-AL-W22	$116
		4/6/8	FAN-E2504P-AL-B	$259
180	284/6	2	FAN-E2502P-AL	$112
		4/6/8	FAN-E2504P-AL-W22	$161
200	324/6	2	FAN-E3202P-AL-W22	$157
		4/6/8	FAN-E3204P-AL	$421

For "P" High Efficiency Level

IEC Frame Size	NEMA Frame Size	POLE	Catalog Number	List Price
63	-	All	FAN-E63-AL	$55
71	-	All	FAN-E71-AL	$70
80	-	2	FAN-E71-AL	$70
		4/6/8	FAN-E80-AL	$88
90	143/5	2/4	FAN-E80-AL	$88
		6/8	FAN-E1404P-AL	$116
100	-	All	FAN-E100-AL	$161
112	182/4	2/4	FAN-E180W21024P-AL	$112
		6/8	FAN-E1804P-AL-B	$223
132	213/5	2/4	FAN-E180W21024P-AL	$112
		6/8	FAN-E210-4/6P-AL	$313
160	254/6	2	FAN-E2502-4P-AL-W22	$116
		4/6/8	FAN-E2504P-AL-B	$259
180	284/6	2	FAN-E2502P-AL	$112
		4/6/8	FAN-E2504P-AL-W22	$161
200	324/6	2	FAN-E3202P-AL-W22	$157
		4/6/8	FAN-E3204P-AL	$421

continued on next page

Data subject to change without notice.

W22 Aluminum Fan Guide - *continued*

For "T" NEMA Premium® Efficiency Level

IEC FRAME SIZE	NEMA FRAME SIZE	POLE	Catalog Number	List Price
63	-	All	FAN-E63-AL	$55
71	-	All	FAN-E71-AL	$70
80	-	2	FAN-E71-AL	$70
		4/6/8	FAN-E80-AL	$88
90	143/5	2/4	FAN-E80-AL	$88
		6/8	FAN-E1404P-AL	$116
100	-	All	FAN-E100-AL	$161
112	182/4	2/4	FAN-E180W21024P-AL	$112
		6/8	FAN-E1804P-AL-B	$223
132	213/5	2/4	FAN-E180W21024P-AL	$112
		6/8	FAN-E210-4/6P-AL	$313
160	254/6	2/4	FAN-E2502-4P-AL-W22	$116
		6/8	FAN-E2504P-AL-B	$259
180	284/6	2/4	FAN-E2502P-AL	$112
		6/8	FAN-E2504P-AL-W22	$161
200	324/6	2/4	FAN-E3202P-AL-W22	$157
		6/8	FAN-E3204P-AL	$421

For "S" and "P" Efficiency Level (Frame sizes 360 and up)

IEC FRAME SIZE	NEMA FRAME SIZE	POLE	Catalog Number	List Price
225S/M	364/5	2	FAN-E360-4002PAL-W22	$205
		4/6/8	FAN-11101736-AL-W22	$580
250S/M	404/5	2	FAN-E360-4002PAL-W22	$205
		4/6/8	FAN-11101736-AL-W22	$580
280S/M	444/5 445/7 447/9	2	FAN-11101737-AL-W22	$250
		4/6/8	FAN-W22-11101738-AL	$902
315S/M	504/5	2	FAN-W22-11101739-AL	$280
		4/6/8	FAN-W22-11101738-AL	$902
315L	-	2	FAN-W22-11101739-AL	$280
		4/6/8	FAN-W22-11101744-AL	$2,042
-	L447/9	2	FAN-W22-11101739-AL	$280
		4/6/8	FAN-W22-11101744-AL	$2,042
355M/L	586/7	2	FAN-W22-11101739-AL	$280
		4	FAN-W22-11101744-AL	$2,042
		6/8	FAN-11101746-AL-W22	$3,293
355A/B	588/9	2	FAN-11272463-AL-W22	$511
		4	FAN-W22-11101744-AL	$2,042
		6/8	FAN-11101746-AL-W22	$3,293

continued on next page

W22 Aluminum Fan Guide - *continued*

For "T" Nema Prem. Efficiency Level(Frame sizes 360 and up)

IEC FRAME SIZE	NEMA FRAME SIZE	POLE	Catalog Number	List Price
225S/M	364/5	2	FAN-E360-4002PAL-W22	$205
		4	FAN-11101737-AL-W22	$250
		6/8	FAN-11101736-AL-W22	$580
250S/M	404/5	2	FAN-E360-4002PAL-W22	$205
		4	FAN-W22-11101739-AL	$280
		6/8	FAN-11101736-AL-W22	$580
280S/M	444/5 445/7 447/9	2	FAN-11101737-AL-W22	$250
		4	FAN-11101736-AL-W22	$580
		6/8	FAN-W22-11101738-AL	$902
315S/M	504/5	2	FAN-11101737-AL-W22	$250
		4	FAN-11101736-AL-W22	$580
		6/8	FAN-W22-11101738-AL	$902
315L	-	2	FAN-W22-11101739-AL	$280
		4	FAN-W22-11101738-AL	$902
		6/8	FAN-W22-11101744-AL	$2,042
-	L447/9	2	FAN-W22-11101739-AL	$280
		4/6/8	FAN-W22-11101744-AL	$2,042
355M/L	586/7	2	FAN-W22-11101739-AL	$280
		4	FAN-W22-11101738-AL	$902
		6/8	FAN-11101746-AL-W22	$3,293
355A/B	588/9	2	FAN-11272463-AL-W22	$511
		4	FAN-W22-11101744-AL	$2,042
		6/8	FAN-11101746-AL-W22	$3,457

W22 Fan Cover

IEC Frame Size	NEMA Frame Size	Note	Catalog Number	List Price
63	-	N/A	FCO-E63	$23
71	-		FCO-E71	$23
80	-		FCO-E80	$23
90	143/5		FCO-E140-W22	$26
100	-		FCO-E100	$33
112	182/4		FCO-E180-W22	$38
132	213/5		FCO-E210-W22	$53
160	254/6	For Motors with Grease Nipple	FCO-E250-W22	$121
180	284/6		FCO-E280-W22	$149
200	324/6		FCO-E320-W22	$256
225	364/5		FCO-E360-W22	$672
250	404/5		FCO-E400-W22	$672
280	444/5 445/7 447/9		FCO-E440-W22	$1,032
315	504/5		FCO-E500-W22	$1,032
-	L447/9		FCO-EL440-W22	$1,032
355	586/7 588/9		FCO-E580-W22	$1,605

Data subject to change without notice.

W01 Rolled Steel Fan

NEMA Frame Size	Pole	Catalog number	List Price
48 W56	All	FAN-E80	$8
56 56H	All	FAN-FD56/140-15MM	$12
143/5	All	FAN-FD56/140-15MM	$12
182/4	2	FAN-FD56/140-15MM	$12
	4/6	FAN-E100	$18
213/5	2	FAN-E180W2102P	$12
	4/6	FAN-E180W2104P	$19
254/6	2	FAN-E2102P	$17
	4/6	FAN-E2104P	$24

W01 Rolled Steel Fan Cover

NEMA Frame Size	Catalog number	List Price
48 W56	FCO-E48/W56-S	$20
56 56H 143/5	FCO-E56/140-S (Plastic Fan Cover) FCO-E56/140-STL-S (Steel Fan Cover) Not interchangeable	$18.20
143/5	FCO-E56/140-S	$19
182/4	FCO-E180-S	$45.30
213/5	FCO-E210-S	$49
254/6	FCO-E250-S	$89

WEG Motion Fleet Management

Condition Monitoring of the fleet

Developed to bring more practicality and agility in the operation, maintenance and management of industrial plants, the WEG Motion Fleet Management is the ideal solution to monitor and raise the availability of the industrial fleet. Based on “cloud computing” technology, asset monitoring can be followed at any time and from anywhere in the world.

Diagnostics and Integration

Specialist
Advanced algorithms for failure diagnosis and consumption analysis

Exchange
Integration with the customer's or third party's systems or platforms

Application & Management

Management
Fleet overview, alarms, dashboards, online monitoring and fleet reports

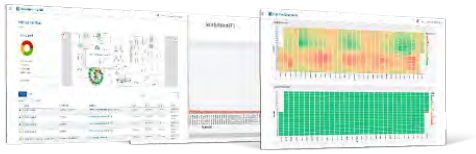

Scan & Gateway

WEG Motion Scan & Gateway

WCD-ED300-DSLV

WCD-ED300-DSMV

WCD-IO300-LM

Assets

Data subject to change without notice.

WEG Motion Fleet Management

With WEG Motion Fleet Management it is possible to know the operational status of electric motors, low and medium voltage variable speed drive and soft-starters, smart relay starting WEG(SRW), gearboxes, gearmotors, compressors, among other assets, which are applied in any type of industry or installation. Through periodic data collection and advanced data processing, both at the edge and in the cloud, valuable insights are generated. This way, it is possible to establish predictive maintenance plans, observing the operational condition of the fleet (condition-based maintenance). This approach reduces the number of unplanned stops, optimizes repair actions, and speeds up the decision-making process for the operation and maintenance team. The result is increased availability and reduced total cost of ownership (TCO) of the drive fleet.

Main features of WEG MFM Solution

- Dedicated and robust hardware for data acquisition;
- Data processing at the edge and in the cloud;
- Periodic fleet reports;
- Creation and management of maintenance orders;
- Asset prioritization tool;
- Specialist Modules with Analytics and Artificial Intelligence for fault diagnosis;
- Exchange modules for data integration with other platforms (via Web Service REST).

Advantages and Benefits of the WMFM Solution

- Monitoring of several assets and plants in a single environment;
- Ecosystem in constant development, both hardware and software;
- Fleet management view with reports and indicators;
- Ready-to-use solution, just register the WEG Scans in the application and use it;
- Customized layouts for navigation at various levels (geolocation, site, plant, device);
- Definition of favorite assets for easy tracking of their status; Daily notifications of assets in alert and/or critical state (via e-mail);
- Customization of tolerances to generate alerts and notifications;
- Enables maintenance management based on the operational condition of the assets;
- Dashboards with indicators, graphics, and history of measured data;
- Screens for user and subscription management;
- Flexible solution available to service providers;
- Operational cost reduction (TCO, Total Cost of Ownership);
- Multi-language application.

WEG Motion Fleet Management
SCAN, GATEWAY & SUBSCRIPTIONS

Type	Catalog Number	Description	List Price	Multiplier
Sensor	WMSC-1-MFM-M	Motor Scan Sensor for Hazardous Area with 1 year of Management Subscription for MFM	$450	E4
Gateway	MOTOR-SCAN GATEWAY	Motor Scan Gateway	$2,165	E4
Subscription - Management [1]	WMF-MGMT-1-MOTOR-ME	WEG Motion Fleet Management Module subscription for Motor Scan - 1 Yr	$340	E4
	WMF-MGMT-2-MOTOR-ME	WEG Motion Fleet Management Module subscription for Motor Scan - 2 Yr	$655	E4
Subscription - Specialist [1]	WMF-SPEC-1-MOTOR-ME	WEG Motion Fleet Specialist Module subscription for Motor Scan - 1 Yr (Per Sensor)	$340	E4
	WMF-SPEC-2-MOTOR-ME	WEG Motion Fleet Specialist Module subscription for Motor Scan - 2 Yr (Per Sensor)	$655	E4
Subscription - Exchange [1]	WMF-EXCH-BASIC-1-ME	Basic Exchange Module subscription for MFM - 1 yr, 10,000 calls / Month	$1,625	E4
	WMF-EXCH-BASIC-2-ME	Basic Exchange Module subscription for MFM - 2 yr, 10,000 calls / Month	$3,145	E4
	WMF-EXCH-STANDARD-1-ME	Standard Exchange Module subscription for MFM - 1 yr, 50,000 calls / Month	$2,975	E4
	WMF-EXCH-STANDARD-2-ME	Standard Exchange Module subscription for MFM - 2 yr, 50,000 calls / Month	$5,765	E4
	WMF-EXCH-PLUS-1-ME	Exchange Plus Module subscription for MFM - 1 yr, 100,000 calls / Month	$4,460	E4
	WMF-EXCH-PLUS-2-ME	Exchange Plus Module subscription for MFM - 2 yr, 100,000 calls / Month	$8,650	E4

Notes:
1) Please contact WEG to purchase the subscription.

Data subject to change without notice.

- Models in black text are Standard Efficiency
- Models in blue text are NEMA Premium® Efficiency
- Models in green text are NEMA Super Premium Efficiency

Catalog Notes

1	1.0 Service Factor	31	Rating is suitable for 1.0SF @ 50Hz. Also suitable for next lower HP @ 1.15SF 50Hz
2	Aluminum Frame with Removable Feet	32	Suitable for 1.15SF @ 50°C ambient
3	Automatic Reset Thermal Overload Protector	33	Suitable for 380V 60Hz when wired as YY (double WYE)
4	Manual Reset Thermal Overload Protector	34	AEGIS® Inside
5	CCW Rotation Viewed from Shaft End - Non Reversible	35	AEGIS® ring installation reduces the available "N-W" length
6	Compressor Duty	36	Super Premium
7	F2 Mount	37	Design A
8	F3 Mount	38	TEAO - Totally Enclosed Air Over
9	Rolled Steel Frame - Cannot be modified with T Box on opposite side	39	Cannot be modified with T Box on opposite side
10	Not Thermally Protected	40	NDE shaft with 3/8” drive socket
11	Metal fan - Not suitable for division 2	41	Also rated 230/460V 50Hz 1.0 SF
12	Reduced Frame	42	Rated 50°C ambient
13	Resilient Base	43	With insulated non drive end housing
14	Roller Bearing	44	With air deflector. Flange MOD not available
15	Round Body - Drip Cover Included	45	Also rated 380V 50Hz
16	Split-Phase Motor	46	56J shaft end with dual opposed threads (7/16-20 UNF-2A R.H and 3/8-16 UNF-2A L.H)
17	TENV - Totally Enclosed Non Ventilated	47	Motor designed with copper bar rotor
18	Z-Frame; Bigger Shaft Diameter and Bearings	48	Motor suitable for safe area only
19	105K Tempature Rise; VFD service requires HP derate	49	Rating suitable for replate to 1.15SF on variable torque VFD power
20	Round Body - Drip Cover NOT Included	50	Rating requires replate to Class H insulation for 1.15SF on variable torque VFD power
21	Stainless Steel Body	51	Not normally stocked. Factory build lead time may apply
22	Two Speed - Double Windings		
23	Two Speed - Single Winding		
24	Modified item. Usually ships in two weeks		
25	Brake rectifier suitable for 230VAC		
26	Brake rectifier suitable for 460VAC		
27	For Export Only (not to be used in the USA) due to Certification and/or Efficiency requirements.		
28	ODP Fan Cooled		
29	Standard Efficiency		
30	High Efficiency (EPACT)		