CPTW Series
Control Power Transformers
Compact and Economical Solutions

www.weg.net | 1-800-ASK-4WEG

VOLTAGE TABLE

VA	Primary Voltage	Secondary Voltage	Part Number
250	220 x 440, 230 x 460, 240 x 480	110, 115, 120	CPTW250-ARC-F0
Max Depth	**Max Width**	**Max Height**	**Mounting Depth**
4.55"	4.50"	4.04"	2.88"
Mounting Width	**Mounting Hole Depth**	**Mounting Hole Width**	**Phase**
3.75"	0.20"	0.41"	1
Frequency	**Shipping Weight**	**Voltage Group**	
50/60 Hz	10.0 lbs.	A	

Notes:
- ∇ Jumper Link and Fuse Clip height not included
- ∇ Add 5/16òto the Depth (A) when fuse clips are included (50 thru 350VA)
- ∇ Add 1 3/8òto the Height (D) when fuse block is included (1, 2, and 3 poles) (50 thru 350VA)
- ∇ Add 1/2òto the Height (D) when fuse block is included (1, 2, and 3 poles) (500 thru 5000VA)

DIAGRAM

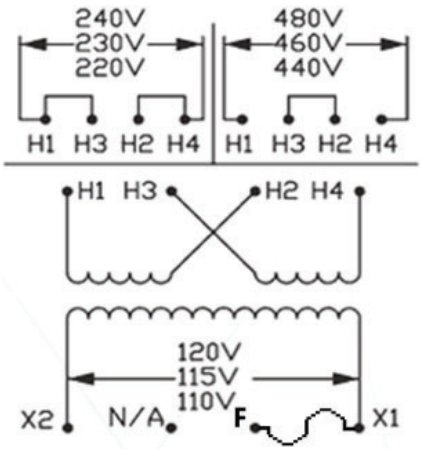

SPECIFICATIONS

- Class 130°C (266°F) insulation system with 80°C (176°F) temperature rise.
- All transformers up to 750VA come with pre-installed secondary fuse kits, ready to accept 13/32” x 1 1/2” midget or Class CC fuses.
- Two parallel jumper links come standard with transformers with dual primary voltages.
- All transformers up to 3kVA include a built-in mounting adapter for fuse blocks.