Soft-Starter

Arrancador Suave

Soft-Starter

Sanftanlaufgerät

Устройство плавного пуска

SSW-06

User's Manual
Manual del Usuario
Manual do Usuário
Bedienungsanleitung
Руководство пользователя

SOFT-STARTER MANUAL

Series: SSW-06

Software: version 1.8X

Language: English

Document: 0899.5854 / 18

04/2019

ATTENTION!

It is very important to check if the Soft-Starter Software is the same as mentioned above.

Summary of Revisions

The table below describes the revisions made to this manual.

Revision	Description	Section
1	First edition	-
2	General revision	-
3	General revision	-
4	New software version	-
5	Implementation of the following current: 412A, 480A, 604A, 670A, 820A, 950A, 1100A and 1400A. New software version with: braking methods FWD/REV and Jog. P140 was changed. E73 was eliminated. E71 and E77 were changed.	Chap 3 and 10 3, 4, 6 and 8
6	General revision	-
7	New software version with: new states in P006, full voltage and starting diagnostic functions, storage of the 6 last errors, consumed energy, torque and power protections, motor thermal protection alarm, selection between alarm or fault, automatic detection of the acceleration end with voltage ramp, fast visualization of the parameters through the key, detection of the Profibus DP master in Stop, and the PLC Software, inclusion of the E11, E18, E57, E58 and E59.	Chap 4, 6 and 8
8	Change of the table 3.1 and figures 10.1, 10.3, 10.4, 10.5, 10.6 and 10.7.	Chap 3 and 10
9	Implementation of the following current: 10A, 16A, 23A, 30A, 45A e 60A.	-
11	New line voltage of 690V for standard motor connection.	-
12	New software version with: digital inputs DI1, DI2 and DI3 programmable for the same functions, new current models of 1000A and 1300A in P295, new option of Fatal Fault for P313, disable of the E77 Fault through the P621 for use in multimotor applications, new MMC block for SoftPLC, new P951 parameter for enable of the IOs expansion card for SoftPLC, new emergency start through digital input. New optional kits KFB-DNIP, K-USB, K-IOE and K-ECA.	-
13	New optional kit, K-PT100. New parameters for optional kit K-PT100 (P091 to P095, P670 to P691). New faults and alarms for optional kit K-PT100 (E33 to E37, E39, E43 to E52).	6, 8 and 9
14	Revision in table 3.9.	3
15	General revision	1
16 and 17	New software version: short circuit protection function in the power of the SSW-06 with the motor stopped (P622 and E19), new programming options for digital outputs (grouping of protections).	-
18	Changes in item 3.2.4	3

Quick Parameter Reference, Fault and Status Messages

I Parameters 09I
Fault or Alarm Messages 21
III Other Messages 21

CHAPTER 1

Safety Notices

1.1 Safety Notices in the Manual 22
1.2 Safety Notices on the Product 22
1.3 Preliminary Recommendations 23

CHAPTER 2

General Information

2.1 About this Manual 24
2.2 Software Version 24
2.3 About the Soft-Starter SSW-06 24
2.4 Soft-Starter SSW-06 Identification 28
2.5 Receiving and Storage 30

CHAPTER 3

Installation and Connection

3.1 Mechanical Installation 31
3.1.1 Environment Conditions 31
3.1.2 Dimensions of the Soft-Starter SSW-06 31
3.1.3 Positioning / Fixing 32
3.1.3.1 Mounting inside a Panel 33
3.1.3.2 Mounting on a Surface 36
3.2 Electrical Installation 37
3.2.1 Power Terminals 38
3.2.2 Location of the Power/ Grounding, Control Connections and Fan Voltage Selection 43
3.2.3 Recommended Power/Grounding Cables 44
3.2.4 Connection of the Power Supply to the Soft-Starter 47
3.2.4.1 Short Circuit Capacity, fuses, circuit breaker - UL 48
3.2.4.2 Input Circuit Breakers and Fuses - IEC 50
3.2.5 Connection of the SSW-06 Soft-Starter to the motor 52
3.2.5.1 Standard Three-Wire Connection (P150=0=Inactive) 52
3.2.5.2 Inside Delta Motor Connection (P150=1=Active) 53
3.2.6 Grounding Connections 54
3.2.7 Fan Connections 55
3.2.8 Signal and Control Connections 56
3.2.9 RS-232, X2 Serial Communication Connection 59
3.2.10 XC8 Serial Communication Board Connection 59
3.2.11 XC6 Fieldbus Communication Board Connection 59

3.3 Recommended Set-Ups 59
3.3.1 Recommended Set-ups using Keypad Command with Isolating Contactor. 61
3.3.2 Recommended Set-ups using Keypad Command with Circuit-breaker 61
3.3.3 Recommended Set-ups with Command via Two-wire Digital Inputs.....62
3.3.4 Recommended Set-ups with Command via Three-wire Digital Inputs.....62
3.3.5 Recommended Set-ups with Command via Three-wire Digital Input and Inside Delta Motor Connection. 63
3.3.6 Recommended Set-ups with Command via Three-wire Digital Input or Serial Communication. 63
3.3.7 Recommended Set-ups with Command via Three-wire Digital Input or Fieldbus Communication.....64
3.3.8 Recommended Setup with Command via Digital Inputs and direction of rotation.....64
3.3.9 Recommended Setup with Command via Digital Inputs and Reverse Braking.....65
3.3.10 Recommended Setup with Command via Digital Inputs and Optimal Braking.....65
3.3.11 Recommended Setup with Command via Digital Inputs and DC-Braking.....66
3.3.12 Recommended Setup with Command via Digital Inputs and External By-pass Contactor.....66
3.3.13 Symbols.....67
3.4 European Directives for Electromagnetic Compatibility Requirements for Installation.....68
3.4.1 Installation 68

CHAPTER 4
Keypad Operation

4.1 Description of the Keypad (HMI-SSW-06) 69
4.2 Use of the Keypad 71
4.2.1 Keypad use for Soft-Starter SSW-06 Operation.....71
4.2.2 Keypad Display - Signalling Indications 72
4.2.3 Parameter viewing and programming 73

CHAPTER 5
Start-up

5.1 Power-up Preparation.....76
5.2 Initial Power-up (required parameter settings) 77
5.3 Start-up.....84
5.3.1 Start-up: Operation via Keypad Type of Control: Voltage Ramp 84

CHAPTER 6

Detailed Parameter Description

6.1 Access and Read Only Parameters - P000 to P099.....87
6.2 Regulation Parameters - P100 to P199.....97
6.3 Configuration Parameters - P200 to P299.....106
6.4 Serial Communication Parameters - P300 to P399.....119
6.5 Motor Parameters - P400 to P499.....121
6.6 Special Function Parameters - P500 to P599 122
6.7 Protection Parameters - P600 to P699.....128
6.8 Selection Between Fault and Alarm - P700 to P790 140
6.9 SoftPLC Parameters - P950 to P999.....142

CHAPTER 7

Programming Information and Suggestions

7.1 Applications and Programming.....143
7.1.1 Starting by Voltage Ramp (P202=0).....145
7.1.2 Starting by Current Limit (P202=1).....146
7.1.3 Starting by Current Ramp with High Initial Current (P202=4).....147
7.1.4 Starting by Current Ramp with Low Initial Current (P202=4) 148
7.1.5 Starting with Pump Control (P202=2).....149
7.1.6 Starting with Torque Control (P202=3) 151
7.1.6.1 Loads with Constant Torque (P202=3 and P120=1 point)..152
7.1.6.2 Loads with Higher Initial Torque (P202=3 and P120=3 points) 152
7.1.6.3 Loads with Constant Torque and S Speed Curve (P202=3 and 120=3 points).....153
7.1.6.4 Loads with Quadratic Torque and S Speed Curve (P202=3 and P120=2 points) 153
7.1.6.5 Loads with Quadratic Torque and Linear Speed Curve (P202=3 and P120=3 points) 154
7.1.6.6 Loads with Quadratic Torque and Higher Initial Torque (P202=3 and P120=3 points) 154
7.1.6.7 Hydraulic Pump Load Type (P202=3) 155
7.2 Protections and Programming.....158
7.2.1 Thermal Classes.....158
7.2.1.1 Suggestions on How to Set Thermal Class.....158
7.2.1.2 Example on How to Set the Thermal Class.....159
7.2.1.3 Time Reduction When Changing from Cold Starting to Hot Starting 160
7.2.1.4 Service Factor 160
7.2.2 Under- and Over- Protections 161
7.2.2.1 Undervoltage and Overvoltage protection.....161
7.2.2.2 Underload Protection.....161
7.2.2.3 Overload Protection.....161

CHAPTER 8

Diagnostics and Troubleshooting

8.1 Faults and Possible Causes 163
8.2 Troubleshooting 169
8.3 Technical Assistance Contacting 169
8.4 Preventive Maintenance 170
8.4.1 Cleaning Instructions 171
8.5 Spare Part List 172

CHAPTER 9

Options and Accessories

9.1 Remote Keypad and Cables 174
9.2 RS-485 for the Soft-Starter SSW-06 176
9.2.1 RS-485 Communication Kit (KRS-485) 176
9.2.2 Optional Module MIW-02 177
9.3 Fieldbus Communication Kits 177
9.3.1 Fieldbus DeviceNet Communication Kit (KFB-DN) 177
9.3.2 Fieldbus Profibus DP-V1 Communication Kit (KFB-PDPV1) 178
9.3.3 Fieldbus DeviceNet Drive Profile Communication Kit (KFB-DD) 178
9.3.4 Fieldbus EtherNet/IP or Modbus/TCP Communication Kit (KFB-ENIP) 178
9.4 USB 179
9.4.1 USB Communication Kit (K-USB) 179
9.5 Inputs and Outputs Expansion Board 179
9.5.1 Digital Inputs and Outputs Expansion Kit (K-IOE) 179
9.5.2 PT100 inputs Kit (K-PT100) 180
9.6 External Current Acquisition 180
9.6.1 External Current Acquisition Kit (K-ECA) 181

CHAPTER 10

Technical Specifications

10.1 Currents and Ratings According to UL508 182
10.2 Currents and Ratings for IP55, IV Pole Weg Motor 184
10.3 Power Data 186
10.4 Electronics/Programming Data 186
10.5 Mechanical Data 187

QUICK PARAMETER REFERENCE, FAULT AND STATUS MESSAGES

Software: V1.8X
Application:
Model:
Serial Number:
Person Responsible:
Date: / / .

I. Parameters

Parameter	Description	Adjustable Range	Factory Setting	Unit	User´s Setting	Page
P000	Parameter Access	0 to 999	0	-		84
	READ ONLY PARAMETERS	**P001 to P099**				
P001	Soft-Starter Current (%In of the Soft-Starter)	0 to 999.9	-	%		85
P002	Motor Current (%In of the Motor)	0 to 999.9	-	%		85
P003	Motor Current	0 to 9999.9	-	A		85
P004	Line Voltage	0 to 999	-	V		85
P005	Line Frequency	0 to 99.9	-	Hz		85
P006	Soft-Starter Status	0=Ready 1=Initial Test 2=Error 3=Ramp Up 4=Full Voltage 5=By-pass 6=Reserved 7=Ramp Down 8=Braking 9=FWD/REV 10=JOG 11=Delay P630 12=General Disable	-	-		86
P007	Output Voltage	0 to 999	-	V		86
P008	Power Factor	0 to 1.00	-	-		86
P009	Motor Torque (% Tn of the Motor)	0 to 999.9	-	%		86
P010	Output Power	0 to 6553.5	-	kW		87
P011	Apparent Output Power	0 to 6553.5	-	kVA		87
P012	DI1 to DI6 Status	0=Inactive 1=Active	-	-		87
P013	RL1, RL2 and RL3 Status	0=Inactive 1=Active	-	-		88
P014	Last Fault	0 to 99	-	-		88
P015	Second Previous Fault	0 to 99	-	-		88
P016	Third Previous Fault	0 to 99	-	-		88
P017	Fourth Previous Fault	0 to 99	-	-		88
P018	Fifth Fault	0 to 99	-	-		88
P019	Sixth Fault	0 to 99	-	-		88
P020	Current Fault	0 to 99	-	-		89
P021	Current Alarm	0 to 99	-	-		89
P023	Software Version	X.XX	-	-		89
P027	AO1 Output Value	0 to 10.000	-	V		89
P028	AO2 Output Value	0 to 20.000 or 4.000 to 20.000	-	mA		89

Parameter	Description	Adjustable Range	Factory Setting	Unit	User´s Setting	Page
P030	Current of Phase R	0 to 9999.9	-	A		89
P031	Current of Phase S	0 to 9999.9	-	A		89
P032	Current of Phase T	0 to 9999.9	-	A		89
P033	Line Voltage - R-S	0 to 999	-	V		89
P034	Line Voltage - S-T	0 to 999	-	V		89
P035	Line Voltage - T-R	0 to 999	-	V		89
P042	Time Powered	0 to 65535	-	h		90
P043	Time Enabled	0 to 6553,5	-	h		90
P044	kWh Counter	0 to 999.9	-	kWh		90
P045	MWh Counter	0 to 9999	-	MWh		90
P047	Maximum Starting Current	0 to 9999.9	-	A		90
P048	Average Starting Current	0 to 9999.9	-	A		90
P049	Real Starting Time	0 to 999	-	s		90
P050	Motor Thermal Protection Status	0 to 250	-	%		91
P053	Maximum Current at Full Voltage	0 to 9999.9	-	A		91
P054	Maximum Line Voltage with the Motor Running	0 to 999	-	V		91
P055	Minimum Line Voltage with the Motor Running	0 to 999	-	V		91
P056	Maximum Line Frequency with the Motor Running	0 to 99	-	Hz		91
P057	Minimum Line Frequency with the Motor Running	0 to 99	-	Hz		92
P058	Maximum Number of Starts per Hour	0 to 32	-	-		92
P059	Total Number of Starts	0 to 65535	-	-		92
P060	Current at the Last Fault	0 to 9999.9	-	A		92
P061	Voltage at the Last Fault	0 to 999	-	V		92
P062	SSW Status at the Last Fault	0 to 12	-	-		92
P063	Current at the Second Fault	0 to 9999.9	-	A		92
P064	Voltage at the Second Fault	0 to 999	-	V		92
P065	SSW Status at the Second Fault	0 to 12	-	-		92
P066	Current at the Third Fault	0 to 9999.9	-	A		92
P067	Voltage at the Third Fault	0 to 999	-	V		92
P068	SSW Status at the Third Fault	0 to 12	-	-		92
P069	Current at the Fourth Fault	0 to 9999.9	-	A		92
P070	Voltage at the Fourth Fault	0 to 999	-	V		92
P071	SSW Status at the Fourth Fault	0 to 12	-	-		92
P072	Current at the Fifth Fault	0 to 9999.9	-	A		92
P073	Voltage at the Fifth Fault	0 to 999	-	V		92
P074	SSW Status at the Fifth Fault	0 to 12	-	-		92
P075	Current at the Sixth Fault	0 to 9999.9	-	A		92
P076	Voltage at the Sixth Fault	0 to 999	-	V		92
P077	SSW Status at the Sixth Fault	0 to 12	-	-		92
P085	Fieldbus Communication Board Status	0=Off 1=Board Inactive 2=Board Active and Offline 3=Board Active and Online	-	-		93
P088	SoftPLC Status	0=Without 1=Loading 2=Fault 3=Stopped 4=Running	-	-		93

Parameter	Description	Adjustable Range	Factory Setting	Unit	User´s Setting	Page
P089	Allows SoftPLC	0=No 1=Yes	-	-		93
P091	Motor Temperature Channel 1	-20 to 260	-	ºC		93
P092	Motor Temperature Channel 2	-20 to 260	-	ºC		93
P093	Motor Temperature Channel 3	-20 to 260	-	ºC		93
P094	Motor Temperature Channel 4	-20 to 260	-	ºC		93
P095	Motor Temperature Channel 5	-20 to 260	-	ºC		93
	REGULATION PARAMETERS	**P100 to P199**				
	Voltage Ramp					
P101	Initial Voltage (% Un of the motor)	25 to 90	30	%		94
P102	Acceleration Ramp Time	1 to 999	20	s		94
P103	Deceleration Voltage Step (% Un of the motor)	100=Inactive 99 to 60	100=Inactive	%		95
P104	Deceleration Ramp Time	0=Inactive 1 to 299	0=Inactive	s		95
P105	End Deceleration Voltage (% Un of the Motor)	30 to 55	30	%		96
P106 (1)	Automatic Detection of the Acceleration End with Voltage Ramp	0=By Time 1=Automatic	0=By Time	-		96
	Current Limit					
P110	Current Limit (%In of the Motor)	150 to 500	300	%		96
P111	Initial Current for the Current Ramp (% In of the Motor)	150 to 500	150	%		97
P112	Time for the Current Ramp (% of P102)	1 to 99	20	%		97
	Torque Control					
P120 (1)	Starting Torque Characteristics	1=Constant 2=Linear 3=Quadratic	1=Constant	-		98
P121	Initial Starting Torque (% Tn of Motor)	10 to 400	30	%		99
P122	End Starting Torque (% Tn of Motor)	10 to 400	110	%		99
P123	Minimum Starting Torque (% Tn of the Motor)	10 to 400	27	%		99
P124	Time for the Minimum Start Torque (% of P102)	1 to 99	20	%		99
P125 (1)	Stopping Torque Characteristics	1=Constant 2=Linear 3=Quadratic	1=Constant	-		100
P126	End Stop Torque (% Tn of the Motor)	10 to 100	20	%		100
P127	Minimum Stop Torque (% Tn of the Motor)	10 to 100	50	%		101
P128	Time for the Minimum Stop Torque (% of P104)	1 to 99	50	%		101
	Pump Control					
P130 (1)	Pump Control	0= Pump I	0= Pump I	-		101
	By-pass					
P140 (1)	External By-pass Contactor	0=Inactive 1=Active	0=Inactive	-		101

Parameter	Description	Adjustable Range	Factory Setting	Unit	User´s Setting	Page
	Inside Delta					
P150 (1)(2)	Inside Delta Motor Connection	0=Inactive 1=Active	0=Inactive	-		102
	CONFIGURATION PARAMETERS	**P200 to P399**				
P200	Password	0=Inactive 1=Active	1=Active	-		103
P201 (2)	Language Selection	0=Português 1=English 2=Español 3=Deutsch	To be defined by the user	-		103
P202 (1)	Type of Control	0=Voltage Ramp 1=Current Limit 2=Pump Control 3=Torque Control 4=Current Ramp	0=Voltage Ramp	-		103
P204 (1)	Load/Save Parameters	0=Not Used 1=Not Used 2=Not Used 3=Resets P043 to P050 4=Resets P053 to P058 5=Loads Factory Default 6=Not Used 7=Loads User Default 1 8=Loads User Default 2 9=Not Used 10=Saves User Default 1 11=Saves User Default 2 12= Not Used 13=Erases SoftPLC 14=Erases SoftPLC User Parameters 15=Reserved 16=Reserved	0=Not Used	-		106
P205	Display Default Selection	0=P001 1=P002 2=P003 3=P004 4=P005 5=P006 6=P007 7=P008 8=P009 9=P010	2=P003	-		107
P206	Auto-Reset Time	0=Inactive 1 to 600	0=Inactive	s		107
P215 (1)	Copy Function	0=Inactive 1=SSW → HMI 2=HMI → SSW	0=Inactive	-		108
P218	LCD Display Contrast Adjust.	0 to 150	127	-		109

Parameter	Description	Adjustable Range	Factory Setting	Unit	User´s Setting	Page
	Local/Remote Definition					
P220 (1)	Local/Remote Source Selection	0=Always Local 1=Always Remote 2=Keypad (L) 3=Keypad (R) 4=DI4 to DI6 5=Serial (L) 6=Serial (R) 7=Fieldbus (L) 8=Fieldbus (R) 9=SoftPLC(L) 10=SoftPLC(R)	2=Keypad (L)	-		109
P229 (1)	Local Status Command Selection	0=HMI Key 1= Digital Inputs DIx 2=Serial 3=Fieldbus 4=SoftPLC	0=HMI Key	-		110
P230 (1)	Remote Status Command Selection	0=HMI Key 1= Digital Inputs DIx 2=Serial 3=Fieldbus 4=SoftPLC	1=Digital Inputs DIx	-		110
P231 (1)	FWD/REV Selection	0=Inactive 1=By Contactor 2=JOG Only	0=Inactive	-		110
	Analog Outputs					
P251	AO1 (0 to 10)V Output Function	0=Not Used 1= Current (%In of the SSW) 2=Input Voltage (%Un of the SSW) 3=Output Voltage (%Un of the SSW) 4=Power Factor 5=Thermal Protection 6=Power (in W) 7=Power (in VA) 8=Torque (%Tn of Motor) 9=Fieldbus 10=Serial 11=SoftPLC	0=Not Used	-		111
P252	AO1 Analog Output Gain	0.000 to 9.999	1.000	-		111
P253	AO2 (0 to 20)mA or (4 to 20)mA Output Function	0=Not Used 1= Current (%In of the SSW) 2=Input Voltage (%Un of the SSW) 3=Output Voltage (%Un of the SSW) 4=Power Factor 5=Thermal Protection 6=Power (in W) 7=Power (in VA)	0=Not Used	-		111

Parameter	Description	Adjustable Range	Factory Setting	Unit	User´s Setting	Page
		8=Torque (%Tn of the Motor) 9=Fieldbus 10=Serial 11=SoftPLC				
P254	AO2 Analog Output Gain	0.000 to 9.999	1.000	-		111
P255	AO2 Analog Output Selection	0=0 to 20 1=4 to 20	0=0 to 20	mA		112
	Digital Inputs					
P263 (1)	Digital Input DI1 Function	0=Not Used 1=Start/Stop 2=Start (Three Wires) 3=Stop (Three Wires) 4=General Enabling 5=Reset	1=Start/Stop			113
P264 (1)	Digital Input DI2 Function	0=Not Used 1=Stop (Three-Wires) 2=Reset 3=Start/Stop 4=Start (Three Wires) 5=General Enabling	2=Reset			113
P265 (1)	Digital Input DI3 Function	0=Not Used 1=General Enabling 2=Reset 3=Start/Stop 4=Start (Three Wires) 5=Stop (Three Wires) 6=Emergency Start	0=Not Used			113
P266 (1)	DI4 Digital Input Function	0=Not Used 1=FWD/REV 2=Local/Remote 3=No External Fault 4=JOG 5=Brake Off 6=Reset	0=Not Used	-		113
P267 (1)	DI5 Digital Input Function	0=Not Used 1=FWD/REV 2=Local/Remote 3=No External Fault 4=JOG 5=Brake Off 6=Reset	0=Not Used	-		113
P268 (1)	DI6 Digital Input Function	0=Not Used 1=FWD/REV 2=Local/Remote 3=No External Fault 4=JOG 5=Brake Off 6=Reset 7=Motor Thermistor	0=Not Used	-		113
	Digital Outputs					
P277 (1)	RL1 Relay Function	0=Not Used 1=Running 2=Full Voltage	1=Running	-		114

Parameter	Description	Adjustable Range	Factory Setting	Unit	User´s Setting	Page
		3=External By-pass 4=FWD/REV-K1 5=DC-Brake 6= No Fault 7=Fault 8=Fieldbus 9=Serial 10=SoftPLC 11=No Alarm 12=Alarm 13=Breaker Shunt Trip				
P278 (1)	RL2 Relay Function	0=Not Used 1=Running 2=Full Voltage 3=External By-pass 4=FWD/REV-K2 5=DC-Brake 6= No Fault 7=Fault 8=Fieldbus 9=Serial 10=SoftPLC 11=No Alarm 12=Alarm 13=Breaker Shunt Trip	2=Full Voltage	-		114
P279 (1)	RL3 Relay Function	0=Not Used 1=Running 2=Full Voltage 3=External By-pass 4= Not Used 5=DC-Brake 6=No Fault 7=Fault 8=Fieldbus 9=Serial 10=SoftPLC 11=No Alarm 12=Alarm 13=Breaker Shunt Trip	6=No Fault	-		114
	Soft-Starter Data					
P295 (1)(2)	SSW Nominal Current	0=10 1=16 2=23 3=30 4=45 5=60 6=85 7=130 8=170 9=205 10=255 11=312 12=365 13=412 14=480 15=604 16=670 17=820 18=950 19=1100 20=1400 21=1000 22=1300	According to Soft-Starter Nominal Current	A		115

Parameter	Description	Adjustable Range	Factory Setting	Unit	User´s Setting	Page
P296 (1)(2)	SSW Nominal Voltage	0=220/575 1=575/690	According to Soft-Starter Nominal Voltage	V		116
	SERIAL COMMUNICATION PARAMETERS P300 to P399					
P308 (1)(2)	Soft-Starter Address on the Serial Communication Network	1 to 247	1	-		116
P309 (1)(2)	Fieldbus Communication Board Enabling	0=Inactive 1=Profibus-DP (1 Input and 1 Output) 2=Profibus-DP (4 Inputs and 4 Outputs) 3=Profibus-DP (7 Inputs and 7 Outputs) 4=DeviceNet (1 Input and 1 Output) 5=DeviceNet (4 Inputs and 4 Outputs) 6=DeviceNet (7 Inputs and 7 Outputs) 7= EtherNet/IP (1 Input and 1 Output) 8= EtherNet/IP (4 Input and 4 Output) 9= EtherNet/IP (7 Input and 7 Output)	0=Inactive	-		116
P310	Profibus Master Stop Detection	0=Inactive 1=Active	0=Inactive	-		116
P312 (1)(2)	Protocol Type and Serial Communication Transfer Rate	1=Modbus-RTU (9600bps, no parity) 2=Modbus-RTU (9600bps, odd) 3=Modbus-RTU (9600bps, even) 4=Modbus-RTU (19200bps, no parity) 5=Modbus-RTU (19200bps, odd) 6=Modbus-RTU (19200bps, even) 7=Modbus-RTU (38400bps, no parity) 8=Modbus-RTU (38400bps, odd) 9=Modbus-RTU (38400bps, even)	1=Modbus-RTU (9600bps, no parity)	-		117
P313	Serial and Fieldbus Communication Error Actions (E28, E29 and E30)	0=Inactive 1=Disable 2=General Disable 3=Changes to Local 4=Inactive 5=Fatal Fault	0=Inactive	-		117
P314 (1)	Timeout Time for Serial Communication Telegram Reception	0 to 999	0=Not Used	s		117
P315 (1)	Read Parameter via Fieldbus 1	0 to 999	0	-		117
P316 (1)	Read Parameter via Fieldbus 2	0 to 999	0	-		118
P317 (1)	Read Parameter via Fieldbus 3	0 to 999	0	-		118

Parameter	Description	Adjustable Range	Factory Setting	Unit	User´s Setting	Page
	MOTOR PARAMETERS	**P400 to P499**				
P400 (1)	Nominal Motor Voltage	0 to 999	380	V		118
P401 (1)	Nominal Motor Current	0 to 2424	20	A		118
P402 (1)	Nominal Motor Speed	400 to 3600	1780	rpm		118
P404 (1)	Nominal Motor Power	0.1 to 2650	75	kW		118
P405 (1)	Motor Power Factor	0 to 1.00	0.89	-		118
P406 (1)	Service Factor	0 to 1.50	1.00	-		119
	SPECIAL FUNCTION PARAMETERS	**P500 to P599**				
	Braking					
P500 (1)	Braking Methods	0=Inactive 1=Reverse Braking 2=Optimal Braking 3=DC-Braking	0=Inactive	-		119
P501	Braking Time	1 to 299	10	s		122
P502	Braking Voltage Level	30 to 70	30	%		122
P503	Braking End Detection	0=Inactive 1=Automatic	0=Inactive	-		122
	JOG					
P510 (1)	Jog	0=Inactive 1=Active	0=Inactive	-		123
P511	Jog Level	10 to 100	30	%		123
	Kick Start					
P520 (1)	Kick Start Torque Pulse (according to P202)	0=Inactive 1=Active	0=Inactive	-		124
P521	Kick Start Pulse Time	0.1 to 2	0.1	s		124
P522	Kick Start Voltage Pulse Level (% Un of the Motor)	70 to 90	70	%		124
P523	Kick Start Current Pulse Level (% In of the Motor)	300 to 700	500	%		124
	PROTECTION PARAMETERS	**P600 to P699**				
	Voltage Protection					
P600 (1)	Immediate Undervoltage (% Un of the Motor)	0 to 30	20	%		125
P601 (1)	Immediate Undervoltage Time	0=Inactive 1 to 99	1	s		125
P602 (1)	Immediate Overvoltage (% Un of the Motor)	0 to 30	15	%		125
P603 (1)	Immediate Overvoltage Time	0=Inactive 1 to 99	1	s		125
P604 (1)	Voltage Imbalance between Phases (% Un of the Motor)	0 to 30	15	%		125
P605 (1)	Voltage Imbalance between Phases Time	0=Inactive 1 to 99	1	s		125
	Current Protection					
P610 (1)	Immediate Undercurrent (% In of the Motor)	0 to 99	20	%		126
P611 (1)	Immediate Undercurrent Time	0=Inactive 1 to 99	0=Inactive	s		126
P612 (1)	Immediate Overcurrent (% In of the Motor)	0 to 99	20	%		126

Parameter	Description	Adjustable Range	Factory Setting	Unit	User´s Setting	Page
P613 (1)	Immediate Overcurrent Time	0=Inactive 1 to 99	0=Inactive	s		126
P614 (1)	Current Imbalance between Phases (% In of the Motor)	0 to 30	15	%		126
P615 (1)	Current Imbalance between Phases Time	0=Inactive 1 to 99	1	s		126
P616 (1)	Undercurrent before By-pass Closing	0=Inactive 1=Active	1=Active	-		127
P617 (1)	Locked Rotor at the Start End	0=Inactive 1=Active	1=Active	-		127
P618 (1)	Ground Fault	10 to 30	20	%		127
P619 (1)	Ground Fault Time	0 to 10.0	0=Inactive	s		127
	Phase Sequence					
P620 (1)	RST Phase Sequence	0=Inactive 1=Active	0=Inactive	-		127
	By-pass Contactor Closed Detection					
P621 (1)	By-pass Contactor Closed	0=Inactive 1=Active	1=Active			127
	By-pass Contactor Closed Detection					
P622(1)	Short Circuit in the SSW Power	0=Inactive 1=Active	0=Inactive			127
	Interval between Starts					
P630	Interval of Time after Stop	2 to 999	2	s		127
	Short Circuit Detection in the Power of the SSW					
P640 (1)	Motor Protection Thermal Class	0=Inactive 1=5 2=10 3=15 4=20 5=25 6=30 7=35 8=40 9=45	6=30	-		129
P641 (1)	Auto-Reset of the Thermal Memory	0=Inactive 1 to 600	0=Inactive	s		132
P642	Motor Thermal Protection Alarm	0 to 250	230	%		133
P643	Motor Thermal Protection Alarm Reset	0 to 250	210	%		133
	Torque Protections					
P650 (1)	Immediate Undertorque (% Tn of the Motor)	0 to 99	30	%		133
P651 (1)	Immediate Undertorque Time	0 to 99	0=Inactive	s		133
P652 (1)	Immediate Overtorque (% Tn of the Motor)	0 to 99	30	%		133
P653 (1)	Immediate Overtorque Time	0 to 99	0=Inactive	s		133
	Power Protections					
P660 (1)	Immediate Underpower (% kWn of the Motor)	0 to 99	30	%		134
P661 (1)	Immediate Underpower Time	0 to 99	0=Inactive	s		134
P662 (1)	Immediate Overpower (% kWn of the Motor)	0 to 99	30	%		134
P663 (1)	Immediate Overpower Time	0 to 99	0=Inactive	s		134
	Motor Thermal Protection (Optional PT100)					
P670	PT100 Inputs Card Enable	0=No 1=Yes	0=No	-		134
P671	Motor Overtemperature Ch 1	0=Inactive 1=Error E33	0=Inactive	-		135

Parameter	Description	Adjustable Range	Factory Setting	Unit	User´s Setting	Page
		2=Alarm A33 3=E33 and A33				
P672	Motor Overtemperature Error Actuation Level Ch 1	0 to 250	139	ºC		136
P673	Motor Overtemperature Alarm Actuation Level Ch 1	0 to 250	124	ºC		136
P674	Motor Overtemperature Alarm Reset Level Ch 1	0 to 250	108	ºC		137
P675	Motor Overtemperature Ch 2	0=Inactive 1=Error E34 2=Alarm A34 3=E34 and A34	0=Inactive	-		137
P676	Motor Overtemperature Error Actuation Level Ch 2	0 to 250	139	ºC		136
P677	Motor Overtemperature Alarm Actuation Level Ch 2	0 to 250	124	ºC		136
P678	Motor Overtemperature Alarm Reset Level Ch 2	0 to 250	108	ºC		137
P679	Motor Overtemperature Ch 3	0=Inactive 1=Error E35 2=Alarm A35 3=E35 and A35	0=Inactive	-		137
P680	Motor Overtemperature Error Actuation Level Ch 3	0 to 250	139	ºC		136
P681	Motor Overtemperature Alarm Actuation Level Ch 3	0 to 250	124	ºC		136
P682	Motor Overtemperature Alarm Reset Level Ch 3	0 to 250	108	ºC		137
P683	Motor Overtemperature Ch 4	0=Inactive 1=Error E36 2=Alarm A36 3=E36 and A36	0=Inactive	-		137
P684	Motor Overtemperature Error Actuation Level Ch 4	0 to 250	139	ºC		136
P685	Motor Overtemperature Alarm Actuation Level Ch 4	0 to 250	124	ºC		136
P686	Motor Overtemperature Alarm Reset Level Ch 4	0 to 250	108	ºC		137
P687	Motor Overtemperature Ch 5	0=Inactive 1=Error E37 2=Alarm A37 3=E37 and A37	0=Inactive	-		137
P688	Motor Overtemperature Error Actuation Level Ch 5	0 to 250	139	ºC		136
P689	Motor Overtemperature Alarm Actuation Level Ch 5	0 to 250	124	ºC		136
P690	Motor Overtemperature Alarm Reset Level Ch 5	0 to 250	108	ºC		137
P691	PT100 Sensors Fault (Ch1 to Ch5)	0=Inactive 1=E43 to E52 2=A43 to A52	0=Inactive	-		137

Parameter	Description	Adjustable Range	Factory Setting	Unit	User´s Setting	Page
	SELECTION BETWEEN FAULT OR ALARM	**P700 to P790**				
P705	Motor Thermal Protection Trip	0=Fault E05 1=Alarm A05 2=Fault and Alarm	0=Fault E05	-		137
P706	Open DIx Protection Trip	0=Fault E06 1=Alarm A06	0=Fault E06	-		138
P716	Line Overvoltage Trip	0=Fault E16 1=Alarm A16	0=Fault E16	-		138
P732	Motor Overtemperature – PTC – Trip	0=Fault E32 1=Alarm A32	0=Fault E32	-		138
P765	Motor Undercurrent Trip	0=Fault E65 1=Alarm A65	0=Fault E65	-		138
P766	Motor Overcurrent Trip	0=Fault E66 1=Alarm A66	0=Fault E66	-		138
P778	Motor Undertorque Trip	0=Fault E78 1=Alarm A78	0=Fault E78	-		138
P779	Motor Overtorque Trip	0=Fault E79 1=Alarm A79	0=Fault E79	-		138
P780	Motor Underpower Trip	0=Fault E80 1=Alarm A80	0=Fault E80	-		138
P781	Motor Overpower Trip	0=Fault E81 1=Alarm A81	0=Fault E81	-		138
	SOFTPLC PARAMETERS	**P950 to P999**				
	Control Parameters					
P950 (2)	Enable SoftPLC	0=No 1=Yes	0=No	-		139
P951	Digital Inputs and Outputs Expansion Card Enable	0=No 1=Yes	0=No			139
	User Parameters					
P952	First SoftPLC User Parameter	0 to 65535	0	-		139
P953	Second SoftPLC User Parameter	0 to 65535	0	-		139
P954	Third SoftPLC User Parameter	0 to 65535	0	-		139
P955	Fourth SoftPLC User Parameter	0 to 65535	0	-		139
P956	Fifth SoftPLC User Parameter	0 to 65535	0	-		139
P957	Sixth SoftPLC User Parameter	0 to 65535	0	-		139
P958	Seventh SoftPLC User Parameter	0 to 65535	0	-		139
P959	Eighth SoftPLC User Parameter	0 to 65535	0	-		139
P960	Ninth SoftPLC User Parameter	0 to 65535	0	-		139
P961	Tenth SoftPLC User Parameter	0 to 65535	0	-		139
P962	Eleventh SoftPLC User Parameter	0 to 65535	0	-		139
P963	Twelfth SoftPLC User Parameter	0 to 65535	0	-		139
P964	Thirteenth SoftPLC User Parameter	0 to 65535	0	-		139
P965	Fourteenth SoftPLC User Parameter	0 to 65535	0	-		139
P966	Fifteenth SoftPLC User Parameter	0 to 65535	0	-		139
P967	Sixteenth SoftPLC User Parameter	0 to 65535	0	-		139
P968	Seventeenth SoftPLC User Parameter	0 to 65535	0	-		139
P969	Eighteenth SoftPLC User Parameter	0 to 65535	0	-		139

Notes presented on Quick Parameter Reference:
(1) This parameter can only be changed with the motor stopped;
(2) This parameter does not change when factory defaults are loaded (P204=5).

II. Fault or Alarm Messages

Display	Description	Page
E03	Undervoltage, Phase Fault or Phase Unbalancing	160
E04	Overtemperature at the Power Assembly	160
E05 or A05	Motor Overload	160
E06 or A06	External Fault or Alarm (DI)	160
E10	Copy Function Fault	160
E11	Ground Fault	161
E15	Motor is not Connected or SCRs in Short-circuit	161
E16 or A16	Overvoltage	161
E18	Wrong Motor Connection	161
E19	Short Circuit in the SSW Power	161
E24	Programming Error	161
E28	Timeout Error in the Telegram Reception	161
E29	Inactive Fieldbus communication or Profibus master in Stop Fault	161
E30	Fieldbus Board is Inactive	161
E31	Keypad Connection Fault	161
E32 or A32	Motor Overtemperature (DI)	162
E33 or A33	Motor Overtemperature Ch1	162
E34 or A34	Motor Overtemperature Ch2	162
E35 or A35	Motor Overtemperature Ch3	162
E36 or A36	Motor Overtemperature Ch4	162
E37 or A37	Motor Overtemperature Ch5	162
E39	Without Optional PT106 Card	162
E41	Self-Diagnosis Fault	162
E43 or A43	Ch1 Motor Temperature Broken Cable	162
E44 or A44	Ch2 Motor Temperature Broken Cable	162
E45 or A45	Ch3 Motor Temperature Broken Cable	162
E46 or A46	Ch4 Motor Temperature Broken Cable	162
E47 or A47	Ch5 Motor Temperature Broken Cable	162
E48 or A48	Ch1 Motor Temperature Short Circuit	163
E49 or A49	Ch2 Motor Temperature Short Circuit	163
E50 or A50	Ch3 Motor Temperature Short Circuit	163
E51 or A51	Ch4 Motor Temperature Short Circuit	163
E52 or A52	Ch5 Motor Temperature Short Circuit	163
E57	Failure in SCR R-U	163
E58	Failure in SCR S-V	163
E59	Failure in SCR T-W	163
E62	Start Limiting Time	163
E63	Locked Rotor	163
E65 or A65	Undercurrent	163
E66 or A66	Overcurrent	163
E67	Inverted Phase Sequence	163
E70	Undervoltage at the Electronics	164
E71	By-pass Contact is Open	164
E72	Overcurrent before By-pass Contact	164
E74	Current Imbalance	164
E75	Frequency of Supply Line out of Permitted Range	164
E76	Undercurrent before By-pass	164
E77	By-pass Contact is closed or SCRs in Short-circuit	164
E78 or A78	Undertorque	164
E79 or A79	Overtorque	164
E80 or A80	Underpower	164
E81 or A81	Overpower	165
E85	Without SoftPLC	165
E86 to E89	SoftPLC user errors	165
A90 to A93	SoftPLC user alarms	165

For more details see table 8.1 in chapter 8.

III. Other Messages

Display	Description
rdy	Soft-Starter is ready to be enabled
Exx	Soft-Starter fault
Axx	Soft-Starter with alarm

SAFETY NOTICES

This Manual contains all necessary information for the correct installation and operation of the SSW-06 Soft-Starter.
The SSW-06 Instruction Manual has been written for qualified personnel with suitable training or technical qualifications to operate this type of equipment.

1.1 SAFETY NOTICES IN THE MANUAL

The following Safety Notices will be used in this Manual:

DANGER!
If the recommended Safety Instructions are not strictly observed, serious or fatal injuries of personnel and/or equipment damage can occur.

ATTENTION!
Failure to observe the recommended Safety Procedures can lead to material damage.

NOTE!
The content of this Manual supplies important information for the correct understanding of operation and proper performance of the equipment.

1.2 SAFETY NOTICES ON THE PRODUCT

The following symbols may be attached to the product, serving as Safety Notices:

High Voltages.

Components are sensitive to electrostatic discharge. Do not touch them without following proper grounding procedures.

Mandatory connection to ground protection (PE).

Shield connection to ground.

1.3 PRELIMINARY RECOMMENDATIONS

DANGER!
Only qualified personnel should plan or implement the installation, start-up, operation and maintenance of this equipment. Personnel must review this entire Manual before attempting to install, operate or troubleshoot the SSW-06. These personnel must follow all safety instructions included in this Manual and/or defined by local regulations.
Failure to comply with these instructions may result in personal injury and/or equipment damage.

NOTE!
In this Manual, qualified personnel are defined as people that are trained to:

1. Install, ground, power-up and operate the SSW-06 according to this Manual and the local required safety procedures;
2. Use of safety equipment according to the local regulations;
3. Administer First Aid Treatment.

DANGER!
Always disconnect the main power supply before touching any electrical component associated with the SSW-06 Soft-Starter.
High voltages and spinning parts (fans) may be present even after switching off the power supply. Wait at least 3 minutes for the complete discharge of the capacitors and until the fans stopped.
Always connect the equipment frame to the protection earth (PE) in the appropriate place for this.

ATTENTION!
All electronic boards have components that are sensitive to electrostatic discharges. Never touch any of the electrical components or connectors without following proper grounding procedures. If necessary to do so, touch the properly grounded metallic frame or use a suitable ground strap.

Do not apply a high voltage (High Pot) test on the Soft-Starter SSW-06!
If this test is necessary, contact the manufacturer.

NOTE!
Soft-Starter SSW-06 can interfere with other electronic equipment. In order to reduce this interference, adopt the measures recommended in Section 3 “Installation”.

NOTE!
Read this entire manual carefully and completely before installing or operating the Soft-Starter SSW-06.

NOTE!
This product is only available for elevator duty on US market.

ATTENTION!
When in operation, electric energy systems – such as transformers, converters, motors and cables – generate electromagnetic fields (EMF), posing a risk to people with pacemakers or implants who stay in close proximity to them. Therefore, those people must stay at least 2 meters away from such equipment.

GENERAL INFORMATION

This chapter defines the contents and purpose of this manual and describes the main characteristics of the SSW-06 Soft-Starter. Identification of the SSW-06, receiving and storage requirements are also provided.

2.1 ABOUT THIS MANUAL

This manual is divided into 10 chapters, providing information to the user on how to receive, install, start-up and operate the Soft-Starter SSW-06.

Chapter 1 - Safety Notices;
Chapter 2 - General information, receiving and storing of the SSW-06;
Chapter 3 - Information about installation and connection of the Soft-Starter SSW-06 power and control circuit, how to install options and recommended setups;
Chapter 4 - Using the Keypad (Human Machine Interface - HMI);
Chapter 5 - Information about running and steps to be followed;
Chapter 6 - Detailed description of all Soft-Starter SSW-06 programming parameters;
Chapter 7- Information and suggestions on how to program the types of control and protections;
Chapter 8 - Information about diagnostics and troubleshooting, cleaning instructions and preventive maintenance;
Chapter 9 - SSW-06 Soft-Starter optional devices;
Chapter 10 - Tables and technical information about the power lines of the Soft-Starter SSW-06.

This manual provides information for the correct use of the Soft-Starter SSW-06. Due to the various functions of the Soft-Starter SSW-06 many different modes of operation are possible.
As the Soft-Starter SSW-06 can be applied in several ways, it is impossible to describe here all application possibilities, neither can WEG assume any responsibility when the Soft-Starter SSW-06 is not used according to this manual.
No part of this manual may be reproduced in any form, without written permission from WEG.

2.2 SOFTWARE VERSION

It is important to note the software version installed in the Soft-Starter SSW-06, since it defines the functions and the programming parameters of the Soft-Starter. This manual refers to the software version indicated on the inside cover. For example, the version 1.0X applies to versions 1.00 to 1.09, where “X” is a variable that will change due to minor software revisions.
The software version can be read in the parameter P023.

2.3 ABOUT THE SOFT- STARTER SSW-06

The Soft-Starter SSW-06 is a high performance Drive that permits the start control of three-phase AC induction motors. The Soft-Starter SSW-06 prevents mechanical shocks on the load and current peaks in the supply line.
Among the main characteristics of this product is its line and connection fault detection capacity thus enabling the customer to choose the best way of protecting his motor, such as:

- ☑ Programmable protections against line undervoltage and overvoltage, and line phase imbalance;
- ☑ Programmable protections against motor undercurrent and overcurrent, and current imbalance between phases of the motor;
- ☑ Thermal class may be programmed up to Class 45 for large motors. The thermal memory is saved on EEPROM in case of an electronic supply fault.

Special functions such as:

- ☑ Display of the number of hours, running time, supply voltage phase, motor current per phase, motor current in amperes, motor current as a % of the Soft-Starter SSW-06 nominal current and the nominal current as a % of the motor current, status of the digital inputs and outputs;
- ☑ Setting sequence after reset to factory default;
- ☑ Very flexible selection of start/stop control type, enabling the following selections: Voltage Ramp, Constant Current Limiting or by Ramp, Pump Control and Constant, Linear or Quadratic Torque Control;
- ☑ Totally flexible Torque Control providing very high performance for the most demanding applications;
- ☑ Possibility of using all digital inputs, digital outputs and analog outputs as remote PLC via Serial and Fieldbus communication;
- ☑ Possibility of line voltage measurements monitoring by a supervisory implemented through Serial or Fieldbus communication;
- ☑ Monitoring and programming via software SuperDrive G2.
- ☑ Indication of starting and full voltage diagnostics, and faults.

Control Hardware:

- ☑ Keypad, referred to as the Human Machine Interface (HMI) with Liquid-Crystal Display and easy programming. Fault conditions can be displayed in several languages.
- ☑ 32Bit Microprocessor calculates the True rms voltage and current;
- ☑ Measurement of the voltage and current in the three phases;
- ☑ Isolated digital input for the motor PTC;
- ☑ Fieldbus boards and RS-485 as options.

Power Hardware:

- ☑ Compact size;
- ☑ Power supply input and output connections:
  Models from 10A to 820A - Input from the top and output at the bottom of the SSW-06, with built-in By-pass contactor;
  Models from 950A to 1400A - Input and output from the bottom, without built-in By-pass contactor;
- ☑ Easy assembly and maintenance;
- ☑ Measurements of heatsink temperature in models 255A to 820A through two thermostats:One thermostat to switch-on the internal fans and the other to monitor over-heating;
- ☑ Soft-Starter SSW-06 can be coupled to the motor by a standard connection or an inside delta motor connection without requiring optional devices.

Built-in By-pass contactor makes the Soft-Starter SSW- 06 (Models from 10A to 820A):

- ☑ More resistant to supply line oscillations after starting;
- ☑ Save energy that would be dissipated through the thyristors after the start, thus reducing the number of fans required for control panel cooling.

PLC Software Function - SoftPLC

☑ The SSW-06 Soft-Starter allows the implementation of programmable logic controller software in ladder language, the SoftPLC, with an applicative program capacity of 1 Kbyte.

☑ With the SoftPLC, interlocking logics between digital inputs and outputs, analog outputs, motor starting logics, among others, can be created.

☑ This SoftPLC is programmable through the WLP software, according to the WLP manual.

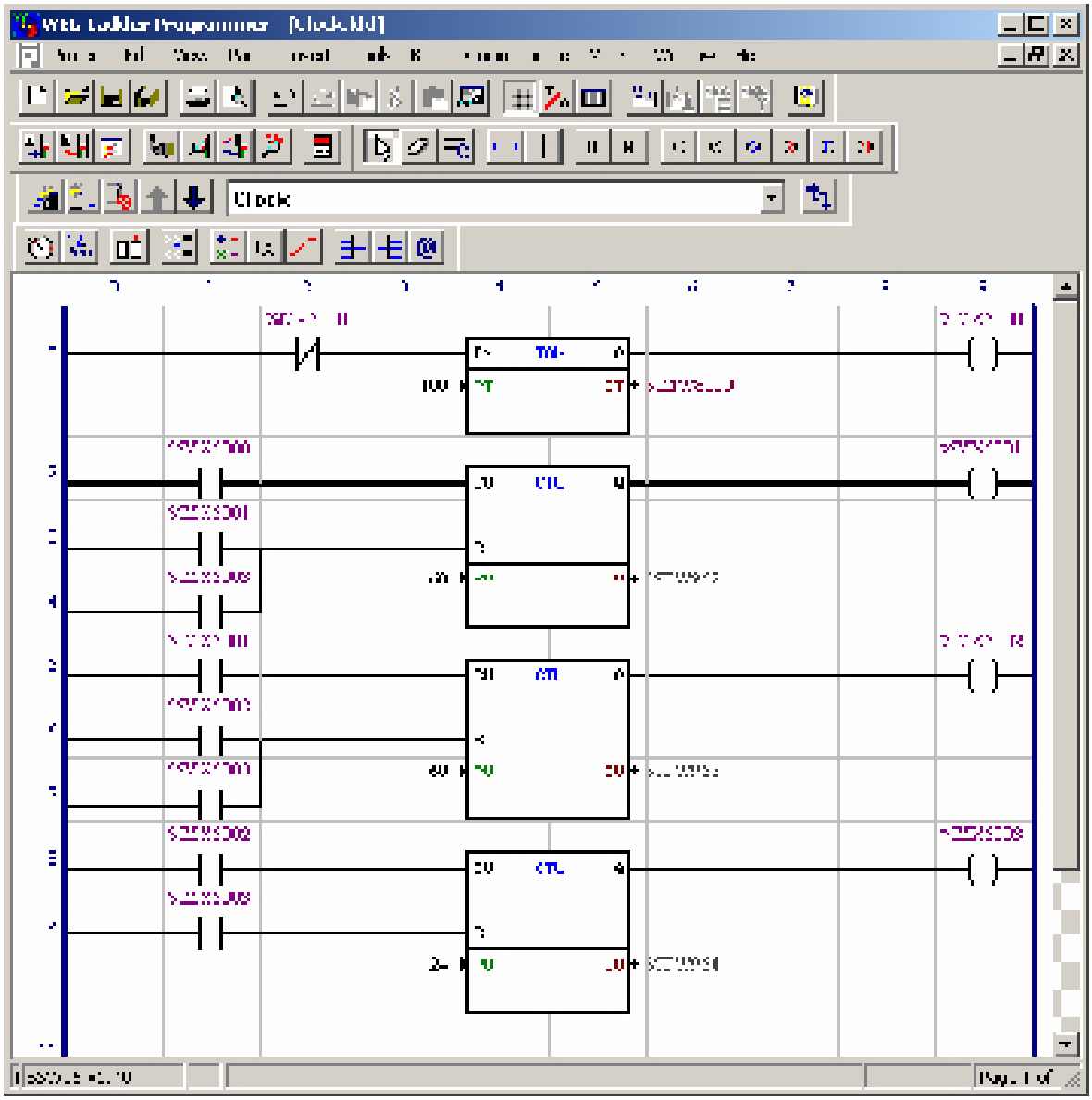

Figure 2.1 *- Example of SoftPLC software with the WLP editing tool*

The example above is the implementation of a clock with hours, minutes and seconds. The hours are showed in parameter P954, the minutes in parameter P953 and the seconds in parameter P952.

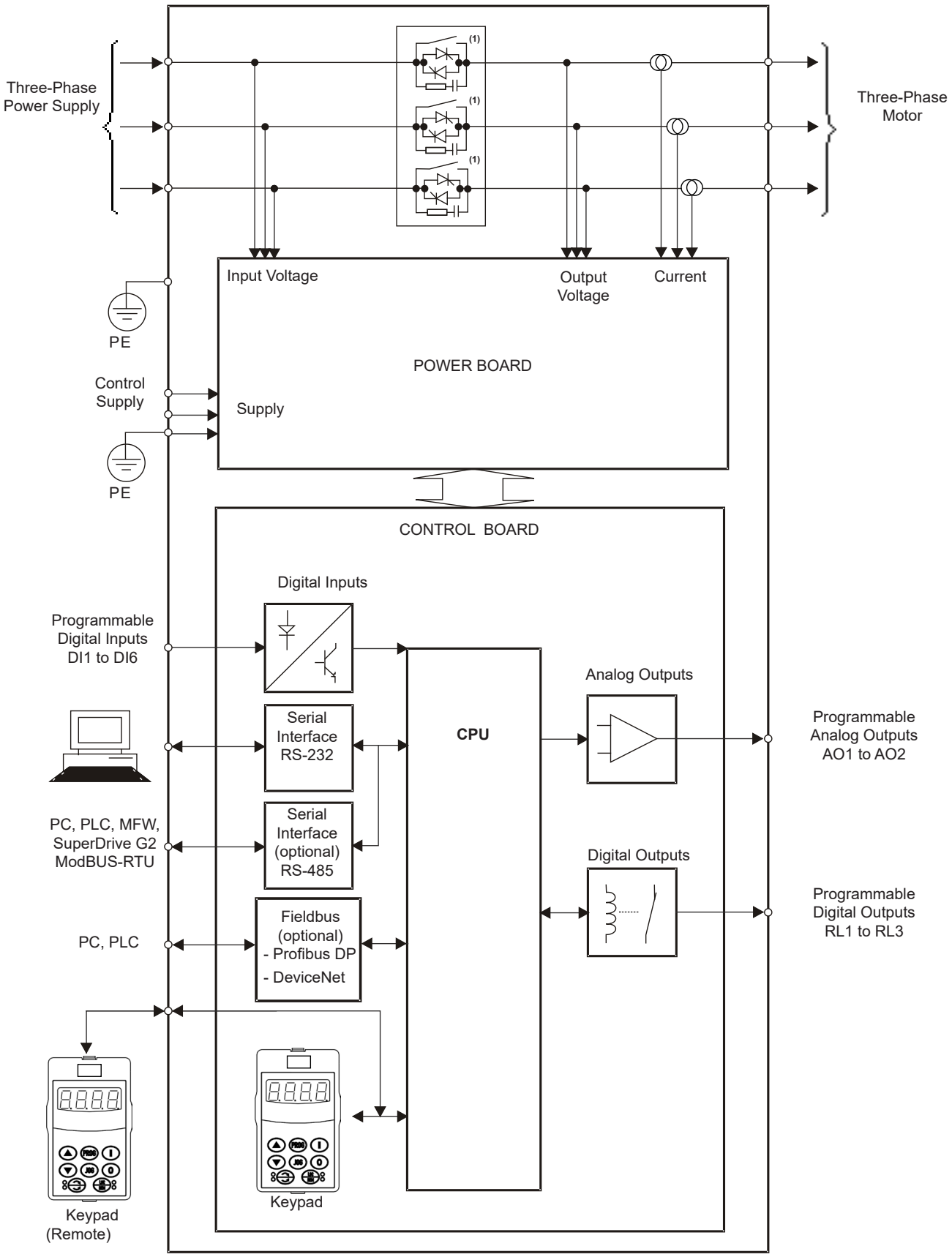

(1) Models 950A, 1100A and 1400A do not have an internal By-pass contactor.

Figure 2.2 *- Soft-Starter SSW-06 block diagram*

2.4 SOFT-STARTER SSW-06 IDENTIFICATION

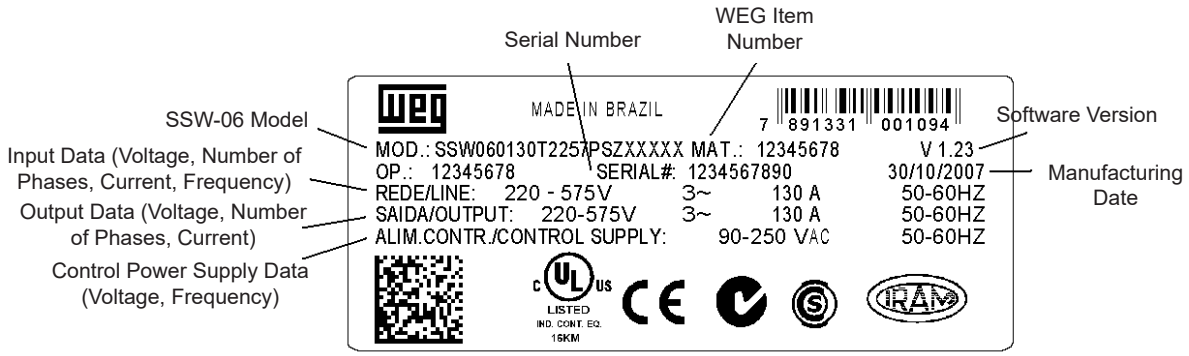

Figure 2.3 *- Soft-Starter SSW-06 nameplate*

Location of Soft-Starter SSW-06 nameplate:

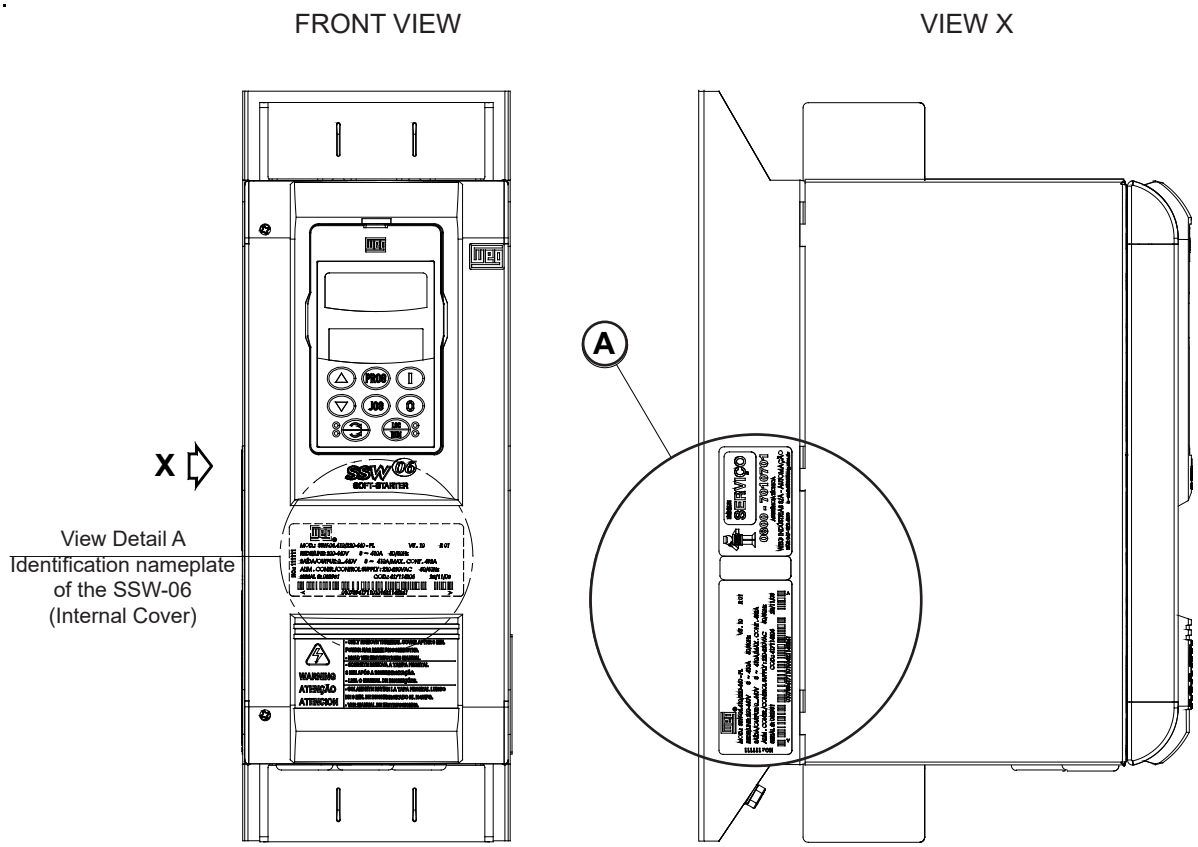

Figure 2.4 *- Detail of the Soft-Starter SSW-06 nameplate*

HOW TO SPECIFY THE SSW-06 MODEL:

SSW-06	*0085*	*T*	*2257*	*E*	*S*	*_ _*	*_ _*	*_ _*	*Z*
Soft-Starter SSW-06 WEG Series	Nominal output current: 0010=10A(1) 0016=16A(1) 0023=23A(1) 0030=30A(1) 0045=45A 0060=60A 0085=85 A 0130=130A 0170=170A 0205=205A 0255=255A 0312=312A 0365=365A 0412=412A 0480=480A 0604=604A 0670=670A 0820=820A 0950=950A 1100=1100A 1400=1400A	Thee-phase power supply	Power supply voltage: 2257 = (220 to 575)V 5769 = (575 to 690)V	Manual language: P=portuguese E=english S=spanish G=german	Options: S=standard O=with options	Human-Machine Interface (Keypad): Blank = standard SI= without keypad	Special hardware: Blank = standard H1 = 115V ventilation (model 950A) H2 = 230V ventilation (models 950A, 1100A and 1400A)	Special software: Blank = standard S1=special software	End of code

NOTE!

The option field (S or O) defines if the Soft-Starter SSW-06 is a standard version or if it is equipped with any optional devices. If the standard version is required, the code ends here. The model number always has the letter Z at the end. For example:
SSW060085T2257ESZ = Standard Soft-Starter SSW-06 with current of 85A and 220V to 575V with manual in English.

If there are accessories, the spaces must be filled out in the correct sequence until the code ends with the letter Z.

The standard product is defined as described here:
☑ Degree of protection: IP20 from 10A to 30A.
☑ Degree of protection: IP00 from 45A to 1400A.
☑ Human-Machine Interface: HMI-SSW06 (with LCD and LED displays).

Note: The communication kits are optional, see chapter 9.

(1) Model 10A, 16A, 23A and 30A not available in the line 690V.

2.5 RECEIVING AND STORAGE

The SSW-06 is supplied in packaging according to the model:
- Models 10A to 205A in a cardboard box;
- Models 255A to 365A in a cardboard box over a wooden box;
- Models 412A to 1400A in a wooden box.

The outside of the packing container has a nameplate that is identical to that on the Soft-Starter SSW-06. Please check if the nameplate data matches the ordered data.
The models up to 205A must be placed and opened on a table with the help of two or more people, open the box, remove the foam protection and remove Soft-Starter SSW-06.
Models greater than 255A must be opened on the floor. Open the box and, remove the bolts that fasten the Soft-Starter SSW-06 on the pallet. The Soft-Starter SSW-06 must be handled with a hoist.
Check if:

☑ The Soft-Starter SSW-06 nameplate data matches the purchase order;

☑ The equipment has not been damaged during transportation. If any problem is detected, contact the carrier immediately.

☑ If the Soft-Starter SSW-06 is not to be installed immediately, store it within its original cardboard box in a clean and dry room (Storage temperatures between -25°C (-13°F) and 65°C (149ºF)).

INSTALLATION AND CONNECTION

This chapter describes the electric and mechanic installation procedures of the SSW-06 Soft-Starters. The orientations and suggestions must be followed for correct product functioning.

3.1 MECHANICAL INSTALLATION

3.1.1 Environment Conditions

The location of the Soft-Starter SSW-06 installation is an important factor to assure good performance and high product reliability.
For proper installation of the SSW-06 Soft-Starter, we make the following recommendations:

- ☑ Avoid direct exposure to sunlight, rain, excessive moisture or marine environment;
- ☑ Avoid explosive or corrosive gases and liquids;
- ☑ Avoid excessive vibration, dust or metallic and/or oil particles in the air.

Allowed Environment Conditions:

- ☑ Temperature: 0ºC to 55ºC (32ºF to 131ºF) – Nominal conditions for models 10A to 820A; 0ºC to 40ºC (32ºF to 104ºF) – Nominal conditions for models 950A to 1400A. 2% current reduction for each degree Celsius above the specification in the nominal conditions.
- ☑ Relative Air Moisture: 5% to 90%, non-condensing.
- ☑ Maximum Altitude:1000m (3,300ft) - nominal conditions.
  From 1000m to 4000m (3,300ft to 13,200ft) - with 1% current reduction for each 100m (330ft) above 1000m (3,300ft).
  From 2000m to 4000m (6,600ft to 13,200ft) - with 1.1% voltage reduction for each 100m (330ft) above 2000m (6,600ft) sea level.
- ☑ Degree of Pollution: 2 (according to UL508).
  Water, condensation or conductive dust/particles are not allowed in the air.

3.1.2 Dimensions of the Soft-Starter SSW-06

External dimensions and mounting holes follow figure 3.1 and table 3.1.

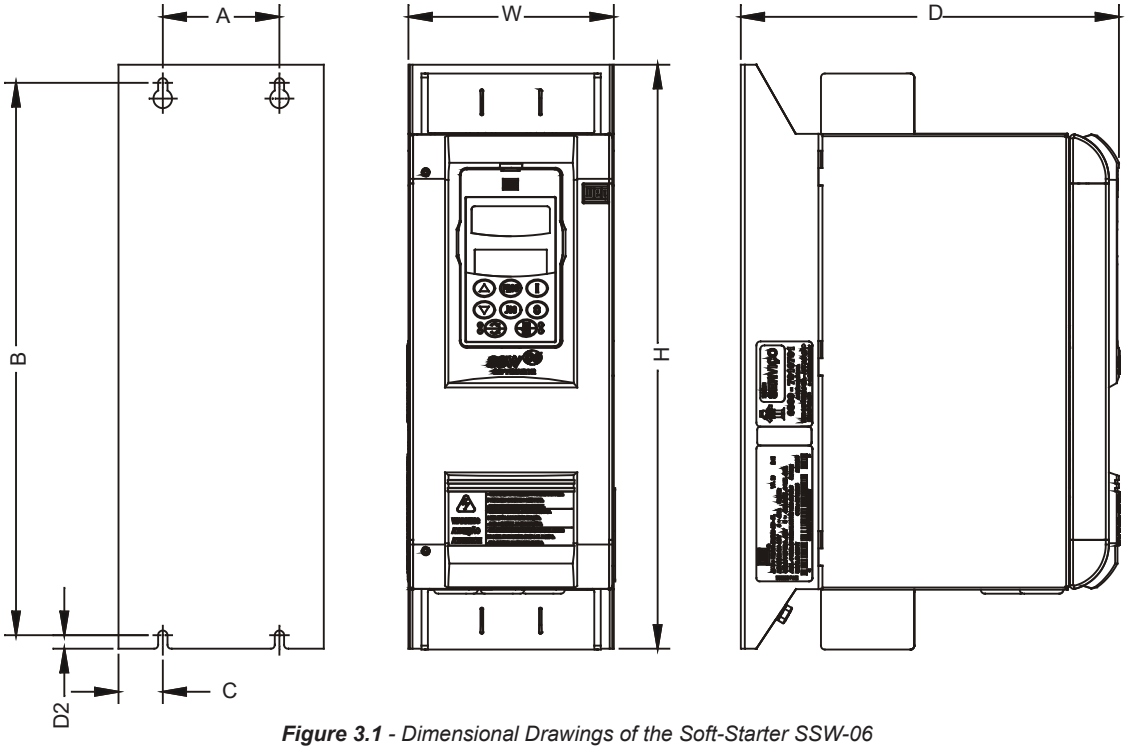

Figure 3.1 *- Dimensional Drawings of the Soft-Starter SSW-06*

Model		Height H	Width W	Depth D	A	B	C	D	Mounting screw	Weight	Degree of Protection
220-575V	575-690V	mm (in)	mm (in)	mm (in)	mm (in)	mm (in)	mm (in)	mm (in)		kg (lb)	
SSW06.0010	-	256 (10.07)	132 (5.20)	182 (7.16)	75 (2.95)	239 (9.40)	28 (1.10)	8.5 (0.33)	M5 (7/32")	3.3 (7.27)	IP20
SSW06.0016	-										
SSW06.0023	-										
SSW06.0030	-										
SSW06.0045	SSW06.0045	370 (14.57)	132 (5.20)	244 (9.61)	75 (2.95)	350 (13.78)	28.5 (1.12)	8.5 (0.33)	M5 (7/32")	8.5 (18.74)	IP00
SSW06.0060	SSW06.0060										
SSW06.0085	SSW06.0085										
SSW06.0130	-										
SSW06.0170	SSW06.0130	440 (17.32)	223 (8.78)	278 (10.94)	150 (5.91)	425 (16.73)	36.5 (1.44)	5.9 (0.23)	M6 (1/4")	18.5 (40.79)	
SSW06.0205	SSW06.0170										
-	SSW06.0205	550 (21.65)	370 (14.57)	311 (12.24)	200 (7.87)	527.5 (20.77)	85 (3.35)	10 (0.39)	M6 (1/4")	41.5 (91.50)	
SSW06.0255	SSW06.0255										
SSW06.0312	SSW06.0312										
SSW06.0365	SSW06.0365										
SSW06.0412	SSW06.0412	650 (25.59)	370 (14.57)	347 (13.67)	200 (7.87)	627.5 (24.70)	85 (3.35)	10 (0.39)	M6 (1/4")	55 (121.27)	
SSW06.0480	SSW06.0480										
SSW06.0604	SSW06.0604										
SSW06.0670	SSW06.0670	795 (31.30)	540 (21.26)	357 (14.05)	350 (13.78)	775 (30.51)	95 (3.74)	7.5 (0.29)	M8 (5/16")	120 (264.60)	
SSW06.0820	SSW06.0820										
SSW06.0950	SSW06.0950	845 (33.27)	570 (22.44)	347 (13.66)	400 (15.75)	810 (31.89)	84 (3.31)	10 (0.39)	M8 (5/16”)	107 (235.93)	
SSW06.1100	SSW06.1100	1147 (45.16)	685 (26.97)	432 (17.01)	500 (19.68)	1110 (43.70)	93 (3.66)	15 (0.59)	M8 (5/16”)	217.5 (479.59)	
SSW06.1400	SSW06.1400										

Table 3.1 *- Installation Data with dimensions in mm (in)*

3.1.3 Positioning / Fixing

Free space for cooling airflow must be left open around the SSW-06 Soft-Starter, according to figure 3.2. The dimensions of each space are described in table 3.2.

Install the Soft-Starter SSW-06 in the vertical position according to the following recommendations:

1) Install the SSW-06 Soft-Starter on a flat surface;
2) Do not place heat sensitive components above the SSW-06 Soft-Starter.

ATTENTION!
If the Soft-Starters are installed one next to the other, use minimum distance B.
When a Soft-Starter is installed above another, use minimum distance A+C and avoid the Soft-Starter above from the hot air that comes from the Soft-Starter below.

ATTENTION!
Foresee independent conduits or electroducts for physically separating the signal, control and power conductors (see item 3.2, Electrical Installation).

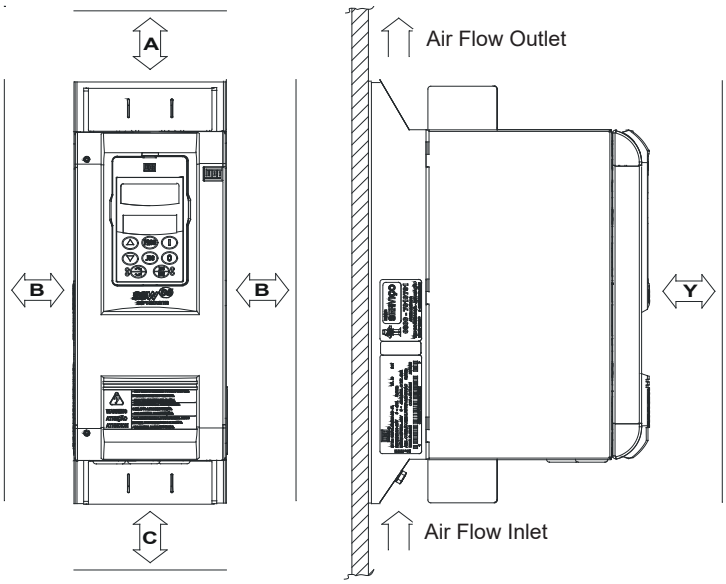

Figure 3.2 *- Free spaces for cooling*

Model		A	B	C	Y
220-575 V	575-690 V	mm (in)	mm (in)	mm (in)	mm (in)
SSW06.0010	-	150 (5.90)	30 (1.18)	150 (5.90)	50 (1.96)
SSW06.0016	-				
SSW06.0023	-				
SSW06.0030	-				
SSW06.0045	SSW06.0045	150 (5.90)	30 (1.18)	150 (5.90)	50 (1.96)
SSW06.0060	SSW06.0060				
SSW06.0085	SSW06.0085				
SSW06.0130	-				
SSW06.0170	SSW06.0130	150 (5.90)	30 (1.18)	150 (5.90)	50 (1.96)
SSW06.0205	SSW06.0170				
-	SSW06.0205	150 (5.90)	30 (1.18)	150 (5.90)	50 (1.96)
SSW06.0255	SSW06.0255				
SSW06.0312	SSW06.0312				
SSW06.0365	SSW06.0365	150 (5.90)	30 (1.18)	150 (5.90)	50 (1.96)
SSW06.0412	SSW06.0412				
SSW06.0480	SSW06.0480				
SSW06.0604	SSW06.0604	150 (5.90)	30 (1.18)	150 (5.90)	50 (1.96)
SSW06.0670	SSW06.0670				
SSW06.0820	SSW06.0820	150 (5.90)	30 (1.18)	150 (5.90)	50 (1.96)
SSW06.0950	SSW06.0950	150 (5.90)	100 (3.93)	150 (5.90)	50 (1.96)
SSW06.1100	SSW06.1100				
SSW06.1400	SSW06.1400				

Table 3.2 *- Recommended free spaces*

3.1.3.1 Mounting inside a Panel

When the Soft-Starters SSW-06 are installed in panels or closed metallic boxes, adequate cooling is required to ensure that the temperature around the inverter will not exceed the maximum allowed temperature. See dissipated power in the table 3.4.

Use the minimum recommended panel dimensions and its cooling requirements:

Model		Panel Dimensions			Cooling m^3/min (CFM)
220-575V	575-690V	Width W mm (in)	Heigth H mm (in)	Depth D mm (in)	
SSW06.0010	-	600 (23.62)	800 (31.49)	300 (11.81)	-
SSW06.0016	-				
SSW06.0023	-				
SSW06.0030	-				
SSW06.0045	SSW06.0045	600 (23.62)	1,000 (39.37)	400 (15.75)	-
SSW06.0060	SSW06.0060				
SSW06.0085	SSW06.0085				
SSW06.0130	-				
SSW06.0170	SSW06.0130	600 (23.62)	1,200 (47.24)	400 (15.75)	-
SSW06.0205	SSW06.0170				
-	SSW06.0205	600 (23.62)	1,600 (63.00)	600 (23.62)	-
SSW06.0255	SSW06.0255				
SSW06.0312	SSW06.0312	600 (23.62)	2,000 (78.74)	600 (23.62)	-
SSW06.0365	SSW06.0365				
SSW06.0412	SSW06.0412	600 (23.62)	2,000 (78.74)	600 (23.62)	-
SSW06.0480	SSW06.0480				
SSW06.0604	SSW06.0604				
SSW06.0670	SSW06.0670	800 (31.5)	2,000 (78.74)	600 (23.62)	-
SSW06.0820	SSW06.0820				
SSW06.0950	SSW06.0950	800 (31.5)	2,000 (78.74)	600 (23.62)	49.8 (1,757.30)
SSW06.1100	SSW06.1100	800 (31.5)	2,000 (78.74)	600 (23.62)	49.8 (1,757.30)
SSW06.1400	SSW06.1400				75.0 (2,648.44)

Table 3.3 *- Panel Dimensions and Cooling Requirements*

NOTE!

The fans recommended in table 3.3 are base on:

- a working cycle of 10 starts per hour with 3 x In of the SSW-06 for 30s at an ambient temperature of 55°C (131°F) for the models from 10A to 820A;
- a working cycle of 5 starts per hour with 30s at an ambient temperature of 40°C (104°F) for the models from 950A to 1400A.

Model		Power losses in the electronics	Fan Power		Total power in the SCRs at full voltage	Average power losses 10 starts per hour 3 x In @ 30s	Total average power losses 10 starts per hour 3 x In @ 30s
220-575V	575-690V	W	W		W	W	W
SSW06.0010	-	18	-		0 = By-pass	9	27
SSW06.0016	-	18	-		0 = By-pass	14.4	32.4
SSW06.0023	-	18	-		0 = By-pass	20.7	38.7
SSW06.0030	-	18	-		0 = By-pass	27	45
SSW06.0045	SSW06.0045	33	-		0 = By-pass	40.5	58.5
SSW06.0060	SSW06.0060	33	-		0 = By-pass	54	72
SSW06.0085	SSW06.0085	33	-		0 = By-pass	76.5	109.5
SSW06.0130	SSW06.0130	33	-		0 = By-pass	117	150
SSW06.0170	SSW06.0170	33	-		0 = By-pass	153	186
SSW06.0205		33	-		0 = By-pass	184.5	217.5
-	SSW06.0205	33	58	528mA @ 110Vac 264mA @ 220Vac	0 = By-pass	184.5	275.5
SSW06.0255	SSW06.0255	33	58	528mA @ 110Vac 264mA @ 220Vac	0 = By-pass	229.5	320.5
SSW06.0312	SSW06.0312	33	58	528mA @ 110Vac 264mA @ 220Vac	0 = By-pass	280.8	371.8
SSW06.0365	SSW06.0365	33	58	528mA @ 110Vac 264mA @ 220Vac	0 = By-pass	328.5	419.5
SSW06.0412	SSW06.0412	33	58	528mA @ 110Vac 264mA @ 220Vac	0 = By-pass	370.5	461.8
SSW06.0480	SSW06.0480	33	58	528mA @ 110Vac 264mA @ 220Vac	0 = By-pass	432	523
SSW06.0604	SSW06.0604	33	58	528mA @ 110Vac 264mA @ 220Vac	0 = By-pass	543.6	634.6
SSW06.0670	SSW06.0670	33	87	792mA @ 110Vac 396mA @ 220Vac	0 = By-pass	603	723
SSW06.0820	SSW06.0820	33	87	792mA @ 110Vac 396mA @ 220Vac	0 = By-pass	738	858
SSW06.0950	SSW06.0950	33	160	1400mA @ 110Vac 700mA @ 220Vac	3,420	427.5	3,898
SSW06.1100	SSW06.1100	33	210	840mA @ 220Vac	3,960	495	4,533
SSW06.1400	SSW06.1400	33	210	840mA @ 220Vac	5,040	630	5,703

Table 3.4 *- Power losses for panel fan dimensioning*

The total power losses can be determined through the equation below:

$$\frac{(Pe \times tc) + (1.2V \times Ip \times 3 \times tp) + (1.2V \times In \times 3 \times tr)}{tc} = Ptd$$

where:
Pe = power losses at the electronics (W)
tc = working cycle time (s)
Ip = start current (A)
tp = start time (s)
In = current at nominal duty (A), with By-pass In=0
tr = nominal duty time (Full Voltage) (s)
Ptd = total power losses (W)

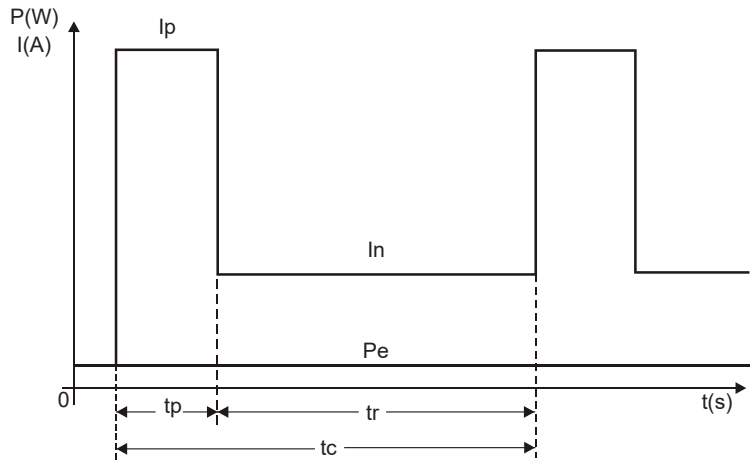

Figure 3.3 *- Soft-Starter SSW-06 working cycle for power loss determination*

3.1.3.2 Mounting on a Surface

The figure 3.4 shows the installation of the Soft-Starter SSW-06 on a mounting plate.

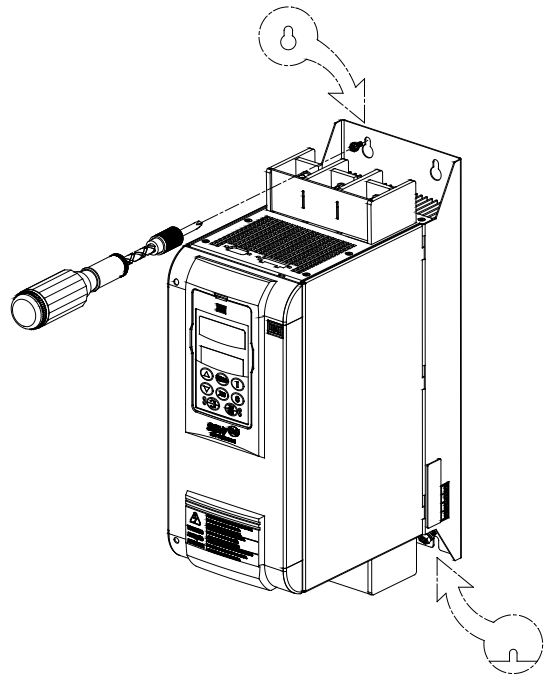

Figure 3.4 *- Mounting procedures for the SSW-06 on a flat surface*

First install and partially tighten the mounting bolts, in agreement with figures 3.1 and 3.4 and table 3.1, then install the Soft- Starter SSW-06 and tighten the mounting bolts.

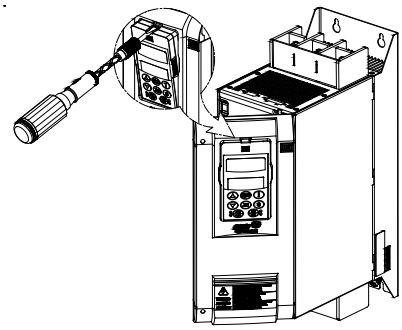

Figure 3.5 *- Procedures for keypad removal and front cover opening for the control connections exposure*

3.2 ELECTRICAL INSTALLATION

DANGER!
Be sure that the AC input power is disconnected before making any terminal connections.

DANGER!
The Soft-Starter SSW-06 cannot be used as an emergency stop device.

ATTENTION!
The information below will be a guide to achieve a proper installation. Also follow all applicable local standards for electrical installations. Provide at least a 0.25m (10 in) space between sensitive equipment and wiring from the Soft-Starter SSW-06, and the cables between the Soft-Starter SSW-06 and the motor. Example: PLC, temperature wiring, thermocouple cables, etc.

ATTENTION!
On the first power-up of models 45A to 365A, if a contactor is not used to isolate the power input, and which will fall out upon under voltage, then the control supply must be connected first and the minimum necessary parameters must be programmed after which the main power may be connected.

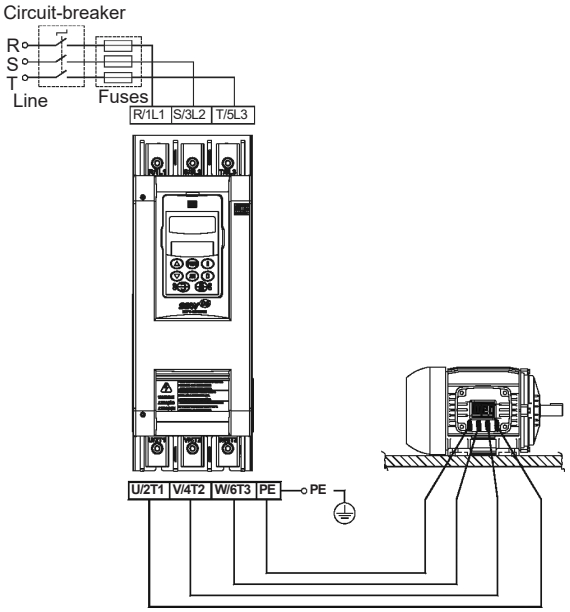

Figure 3.6 *- Standard power/grounding connections*

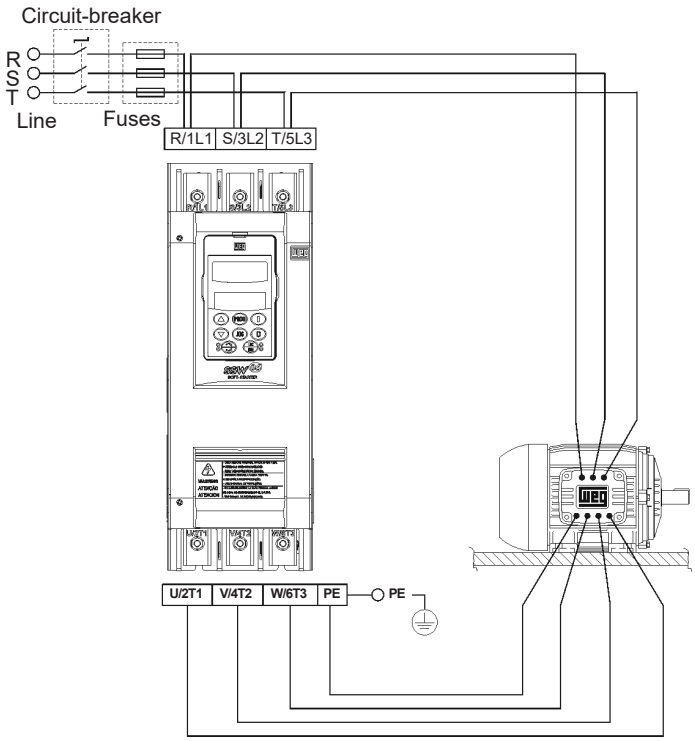

Figure 3.7 *- Power/Grounding connections for inside delta motor connection*

3.2.1 Power Terminals

The power connection terminals can be of different sizes and configurations, depending on the Soft-Starter SSW-06 model as shown in figures 3.8 and 3.9.
Terminals:
R / 1L1, S / 3L2 and T / 5L3: AC supply line
U / 2T1, V / 4T2 and W / 6T3: Motor connection.

a) Models: 10A to 30A

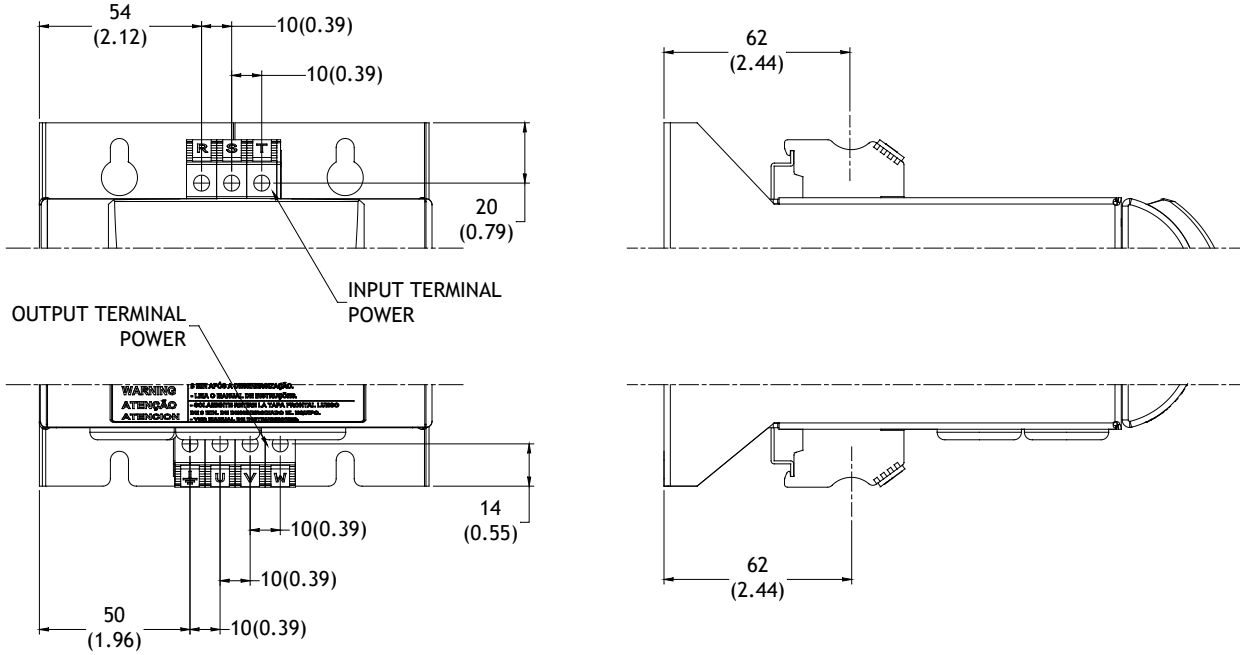

Figure 3.8 a) *- Power Terminals*

b) Models: 45A to 130A (220 - 575V) or 45A to 85A (575 - 690V)

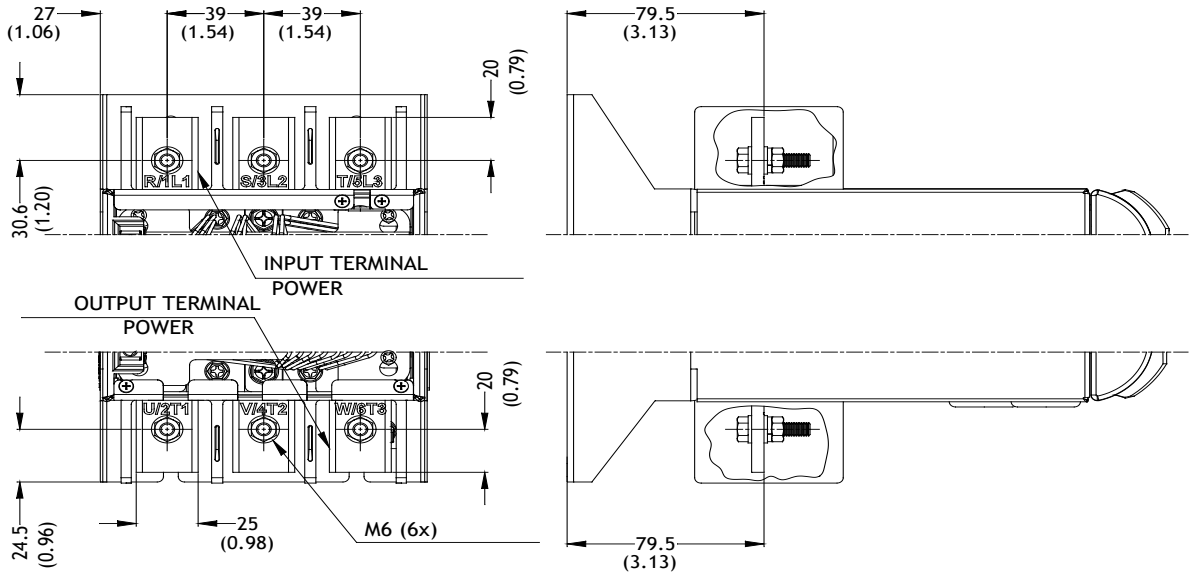

* Dimensions in mm (in)

c) Models: 170A and 205A (220 - 575V) or 130A and 170A (575 - 690V)

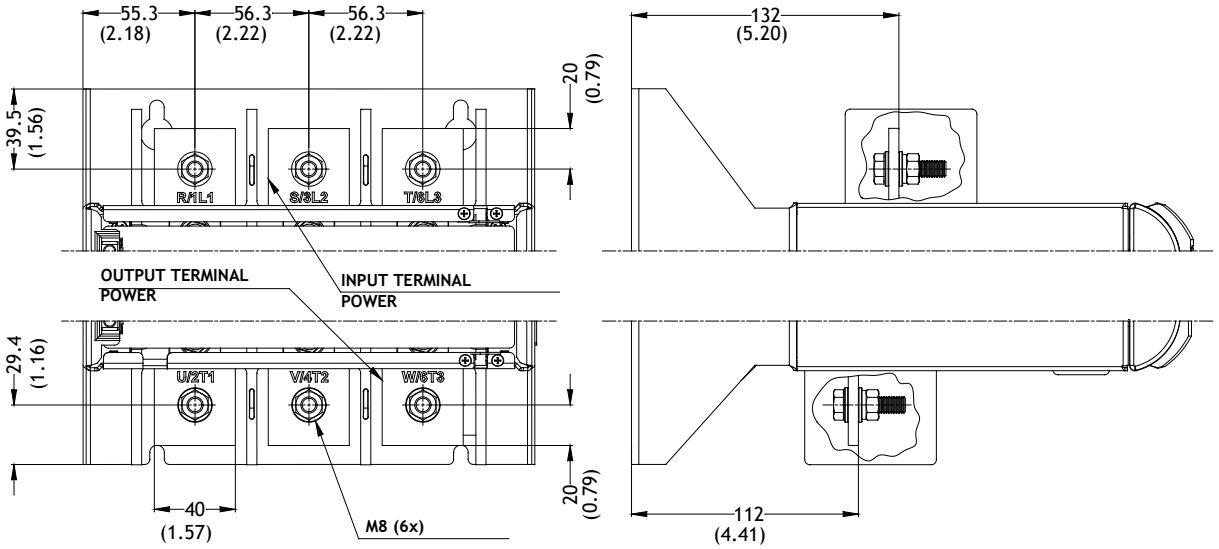

* Dimensions in mm (in)

Figure 3.8 b) c) *- Power Terminals*

d) Models: 255A to 604A (220 - 575V) or 205A to 604A (575-690V)

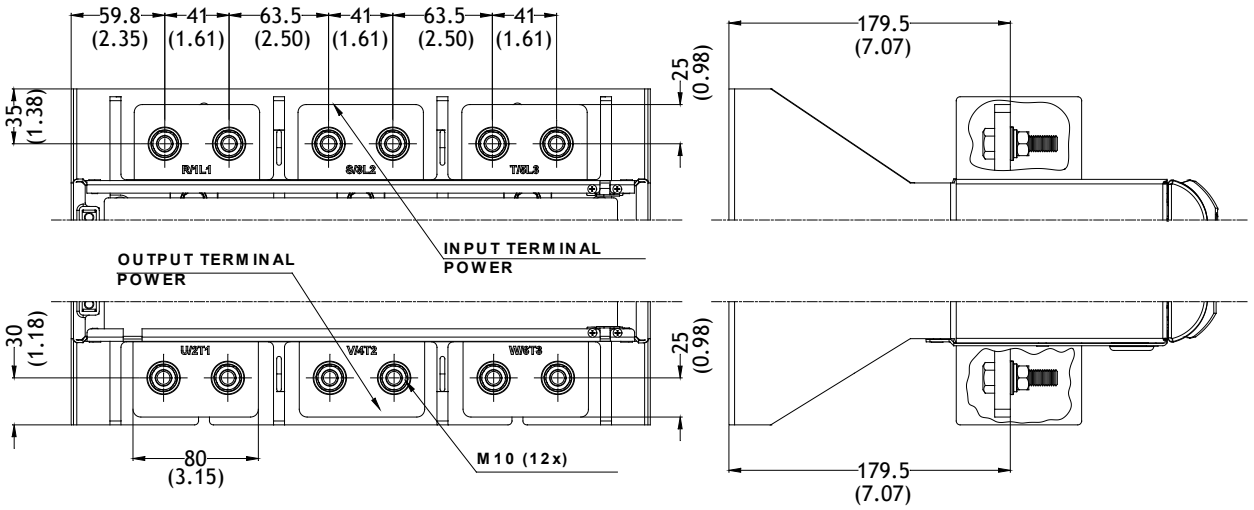

* Dimensions in mm (in)

e) Models: 670A and 820A

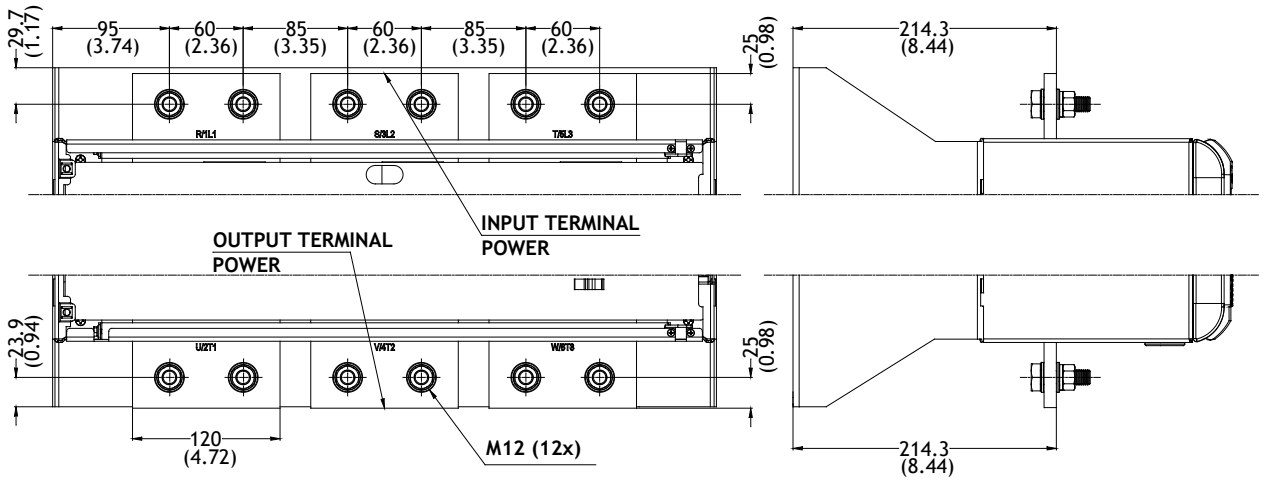

* Dimensions in mm (in)

Figure 3.8 d) e) *- Power terminals*

f) Models: 950A

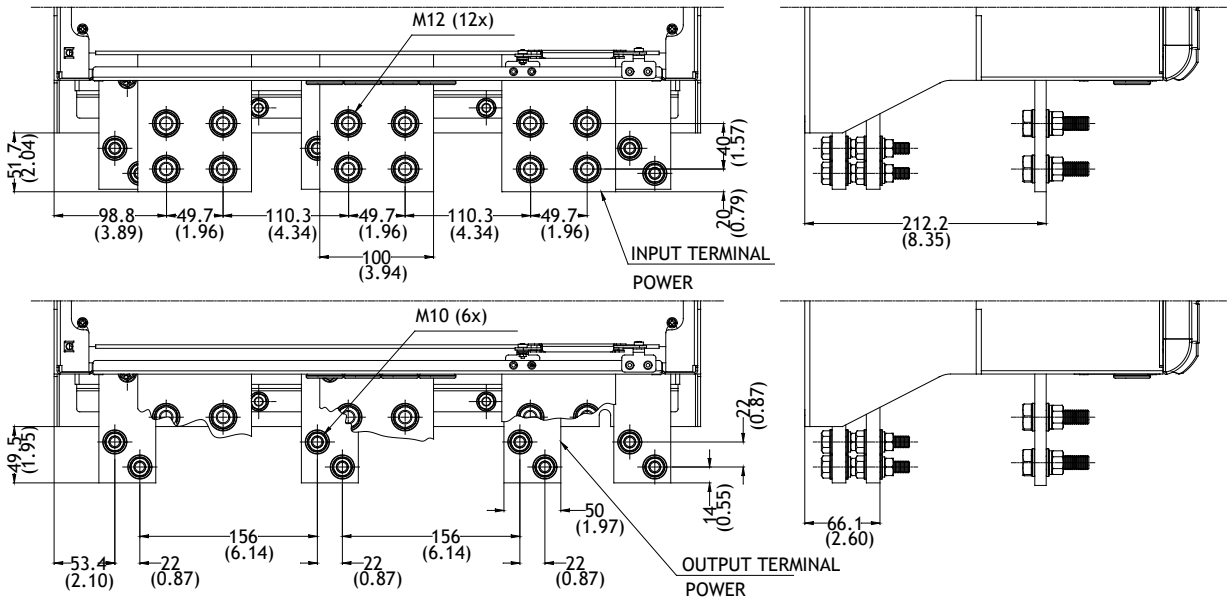

* Dimensions in mm (in)

g) Models: 1100A and 1400A

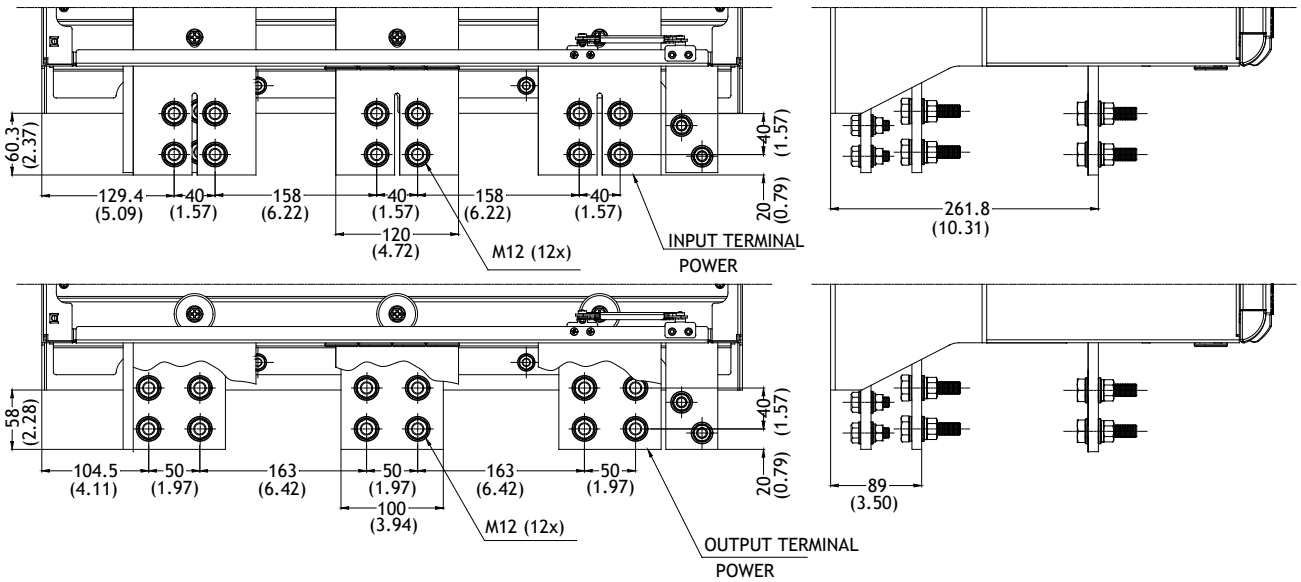

* Dimensions in mm (in)

Figure 3.8 f) g) *- Power terminals*

Model		Line / Motor		Grounding	
220-575V	575-690V	Bolt	Torque Nm (lb.in)	Bolt	Torque Nm (lb.in)
SSW06.0010	-	-	1.2 - 1.4 (10.89 - 12.63)	-	1.2 - 1.4 (10.89 - 12.63)
SSW06.0016	-				
SSW06.0023	-				
SSW06.0030	-				
SSW06.0045	SSW06.0045	M6 (1/4")	8.3 (74.83)	M6 (1/4")	8.3 (74.83)
SSW06.0060	SSW06.0060				
SSW06.0085	SSW06.0085				
SSW06.0130	-				
SSW06.0170	SSW06.0130	M8 (5/16")	19 (166.25)	M6 (1/4")	8.3 (74.83)
SSW06.0205	SSW06.0170				
-	SSW06.0205	M10 (3/8")	37 (328.12)	M10 (3/8")	37 (328.12)
SSW06.0255	SSW06.0255				
SSW06.0312	SSW06.0312				
SSW06.0365	SSW06.0365				
SSW06.0412	SSW06.0412	M10 (3/8")	37 (328.12)	M10 (3/8")	37 (328.12)
SSW06.0480	SSW06.0480				
SSW06.0604	SSW06.0604				
SSW06.0670	SSW06.0670	M12 (1/2")	61 (540.95)	M10 (3/8")	37 (328.12)
SSW06.0820	SSW06.0820				
SSW06.0950	SSW06.0950	M12 (1/2")	61 (540.95)	M10 (3/8")	37 (328.12)
SSW06.1100	SSW06.1100	M12 (1/2")	61 (540.95)	M10 (3/8")	37 (328.12)
SSW06.1400	SSW06.1400				

Table 3.5 *- Maximum tightening Torque for power connection*

3.2.2 Location of the Power/ Grounding, Control Connections and Fan Voltage Selection

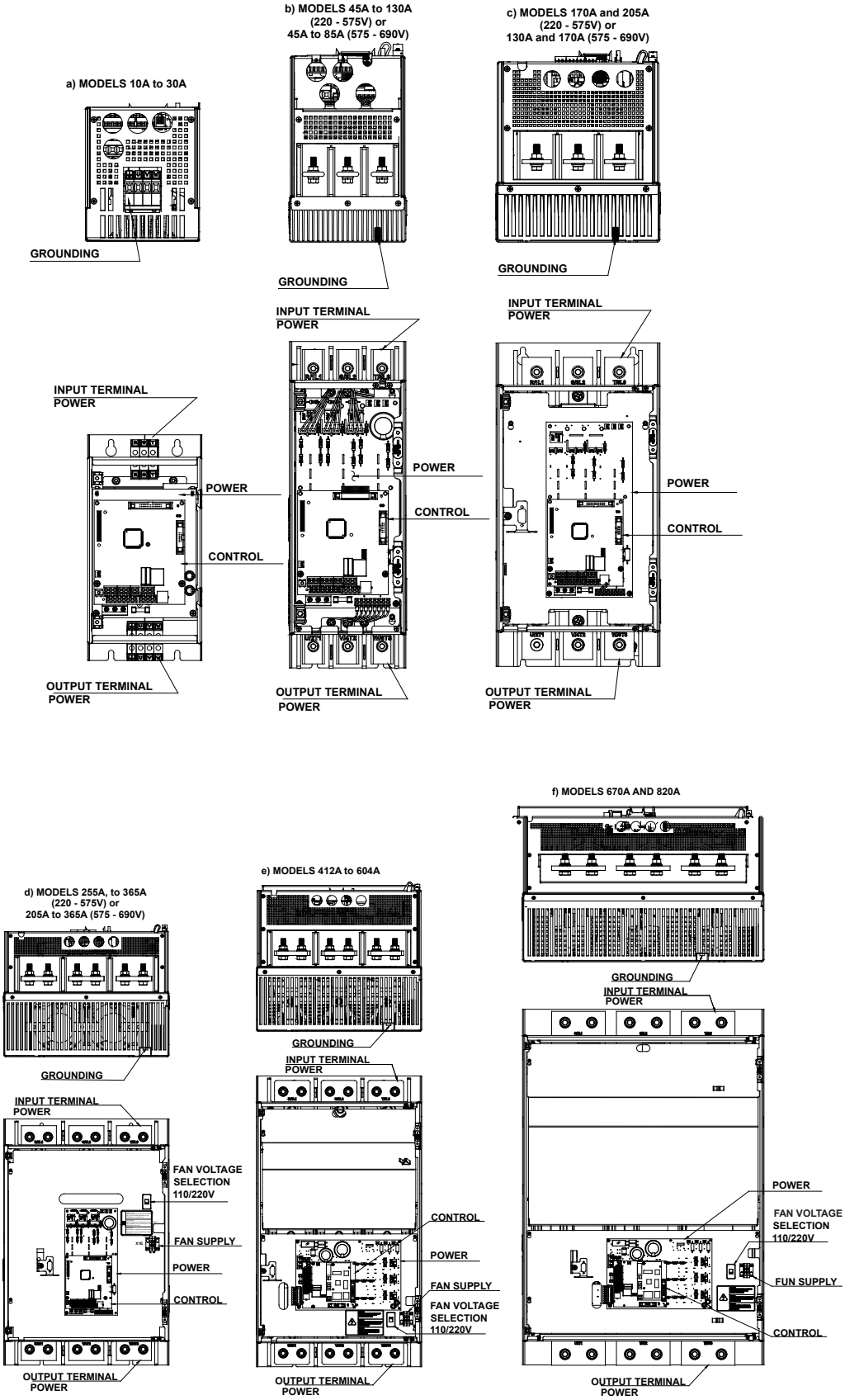

Figure 3.9 a) to f) *- Location of the Power/ Grounding, Control Connections and Fan Voltage Selection*

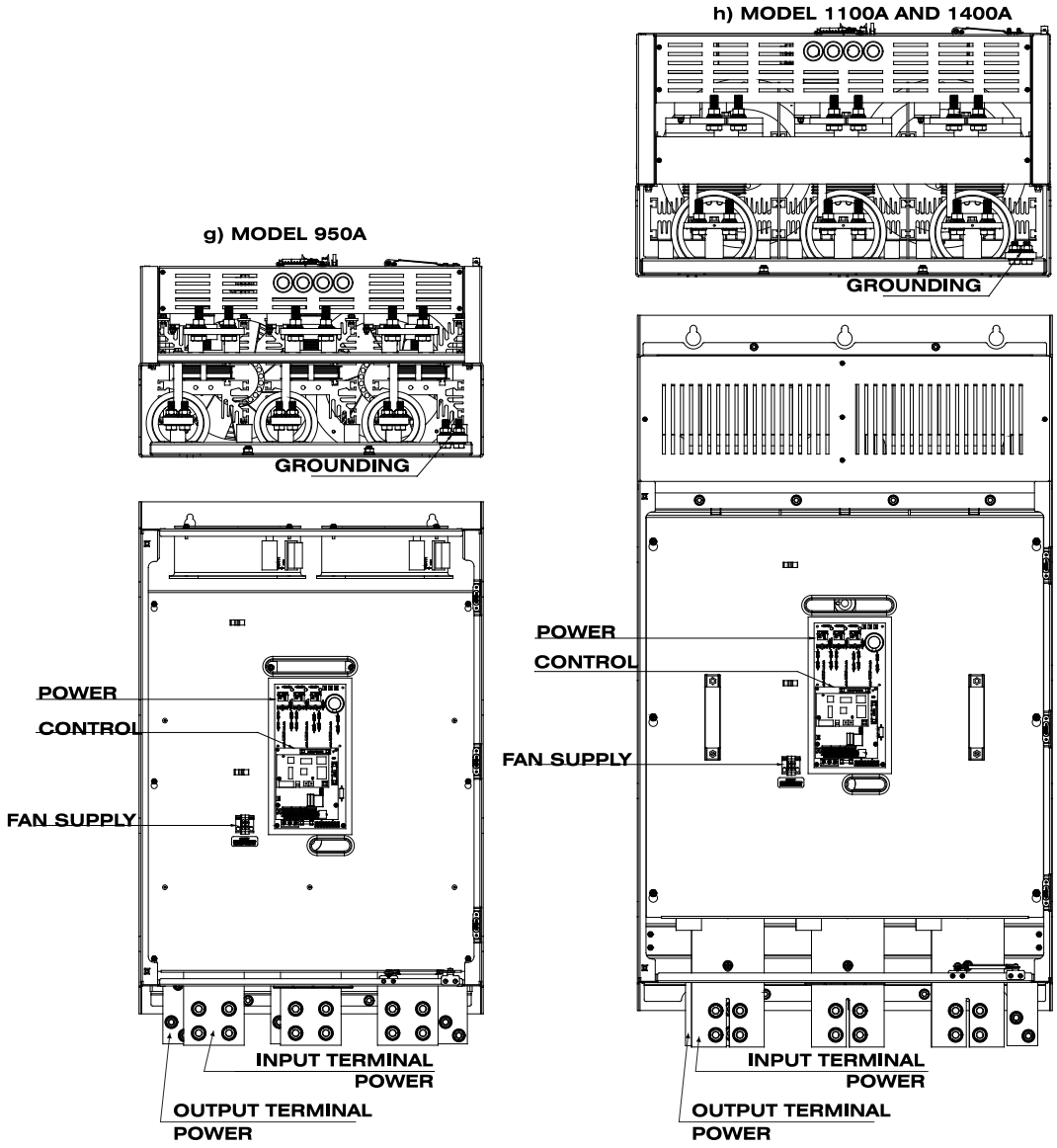

Figure 3.9 g) and h) *- Location of the Power/ Grounding, Control Connections and Fan Voltage Selection*

3.2.3 Recommended Power/ Grounding Cables

The described specifications in tables 3.6 and 3.7 are valid only for the following conditions:

- ☑ Copper wires for 70°C (158°F) with PVC insulation, with ambient temperature of 40°C (104°F), installed in horizontal or vertical holed conduits, with cables arranged in a single layer.
- ☑ Naked or silver coated copper busbars with round edges and radius equal to 1mm with room temperature of 40°C (104ºF) and bus temperature of 80°C (176ºF).

Note: When external By-pass contactors are applied, use the same cables or busbar applied for the motor connection.

NOTE!

For correct cable sizing, consider the installation condition, the maximum permitted line voltage drop, and follow electrical instructions defined by local regulations.

Model	Current 100% In (A)	Cables		Bus bar mm x mm (in x in)	Grounding Cables	
		mm^2	AWG		mm^2	AWG
SSW-06.0010	10	2.5	14	-	2.5	14
SSW-06.0016	16	4	12	-	4	12
SSW-06.0023	23	6	10	-	6	10
SSW-06.0030	30	6	10	-	6	10
SSW-06.0045	45	10	8	12 x 2 (0.47 x 0.08)	6	10
SSW-06.0060	60	16	6	12 x 2 (0.47 x 0.08)	10	8
SSW-06.0085	85	25	3	12 x 2 (0.47 x 0.08)	10	8
SSW-06.0130	130	50	1/0	20 x 3 (0.79 x 0.12)	25	3
SSW-06.0170	170	70	2/0	20 x 3 (0.79 x 0.12)	35	2
SSW-06.0205	205	95	4/0	20 x 3 (0.79 x 0.12)	50	1/0
SSW-06.0255	255	120	250 kcmil	25 x 5 (0.98 x 0.20)	70	2/0
SSW-06.0312	312	185	400 kcmil	25 x 5 (0.98 x 0.20)	95	4/0
SSW-06.0365	365	240	500 kcmil	25 x 5 (0.98 x 0.20)	120	250 kcmil
SSW-06.0412	412	240	600 kcmil	30 x 5 (1.18 x 0.20)	120	250 kcmil
SSW-06.0480	480	300	800 kcmil	40 x 5 (1.57 x 0.20)	150	300 kcmil
SSW-06.0604	604	500	2 x 500 kcmil	40 x 5 (1.57 x 0.20)	150	300 kcmil
SSW-06.0670	670	2 x 240	2 x 600 kcmil	40 x 10 (1.57 x 0.39)	185	350 kcmil
SSW-06.0820	820	2 x 300	2 x 900 kcmil	40 x 10 (1.57 x 0.39)	240	500 kcmil
SSW-06.0950	950	2 x 400	3 x 700 kcmil	50 x 10 (1.97 x 0.39)	300	600 kcmil
SSW-06.1100	1100	2 x 500	4 x 700 kcmil	60 x 10 (2.36 x 0.39)	400	800 kcmil
SSW-06.1400	1400	4 x 300	4 x 900 kcmil	80 x 10 (3.15 x 0.39)	2 x 240	2 x 600 kcmil

Table 3.6 *- Recommended cables or bus bars for standard connection, according to UL508 and IEC 60092-352*

Model	Current 100% In (A)	Line Cables		Line Bus bar mm x mm (in x in)	Motor Cables		Motor Bus bar mm x mm (in x in)	Grounding Cables	
		mm^2	AWG		mm^2	AWG		mm^2	AWG
SSW-06.0010	-	-	-	-	-	-	-	-	-
SSW-06.0016	-	-	-	-	-	-	-	-	-
SSW-06.0023	-	-	-	-	-	-	-	-	-
SSW-06.0030	-	-	-	-	-	-	-	-	-
SSW-06.0045	78	25.0	4	10 x 2 (0.39 x 0.09)	10.0	8	12 x 2 (0.47 x 0.09)	10.0	8
SSW-06.0060	104	35.0	2	20 x 3 (0.79 x 0.12)	16.0	6	12 x 2 (0.47 x 0.09)	10.0	8
SSW-06.0085	147	70	2/0	20 x 3 (0.79 x 0.12)	25	3	12 x 2 (0.47 x 0.08)	10	8
SSW-06.0130	225	95	4/0	20 x 3 (0.79 x 0.12)	50	1/0	20 x 3 (0.79 x 0.12)	25	3
SSW-06.0170	294	150	350 kcmil	25 x 5 (0.98 x 0.20)	70	2/0	20 x 3 (0.79 x 0.12)	35	2
SSW-06.0205	355	185	500 kcmil	25 x 5 (0.98 x 0.20)	95	4/0	20 x 3 (0.79 x 0.12)	50	1/0
SSW-06.0255	441	300	700 kcmil	30 x 5 (1.18 x 0.20)	120	250 kcmil	25 x 5 (0.98 x 0.20)	70	2/0
SSW-06.0312	540	400	1000 kcmil	40 x 5 (1.57 x 0.20)	185	400 kcmil	25 x 5 (0.98 x 0.20)	95	4/0
SSW-06.0365	631	500	2 x 600 kcmil	60 x 5 (2.36 x 0.20)	240	500 kcmil	25 x 5 (0.98 x 0.20)	120	250 kcmil
SSW-06.0412	713	2 x 240	2 x 700 kcmil	40 x 10 (1.57 x 0.39)	240	600 kcmil	30 x 5 (1.18 x 0.20)	120	250 kcmil
SSW-06.0480	831	2 x 300	2 x 900 kcmil	40 x 10 (1.57 x 0.39)	300	800 kcmil	40 x 5 (1.57 x 0.20)	150	300 kcmil
SSW-06.0604	1046	2 x 500	4 x 500 kcmil	50 x 10 (1.97 x 0.39)	500	2 x 500 kcmil	40 x 5 (1.57 x 0.20)	150	300 kcmil
SSW-06.0670	1160	3 x 300	4 x 600 kcmil	60 x 10 (2.36 x 0.39)	2 x 240	2 x 600 kcmil	40 x 10 (1.57 x 0.39)	185	350 kcmil
SSW-06.0820	1420	3 x 500	4 x 900 kcmil	80 x 10 (3.15 x 0.39)	2 x 300	2 x 900 kcmil	40 x 10 (1.57 x 0.39)	240	500 kcmil
SSW-06.0950	1645	4 x 400	5 x 750 kcmil	100 x 10 (3.94 x 0.39)	2 x 400	3 x 700 kcmil	50 x 10 (1.97 x 0.39)	300	600 kcmil
SSW-06.1100	1905	4 x 500	5 x 1000 kcmil	120 x 10 (4.72 x 0.39)	2 x 500	4 x 700 kcmil	60 x 10 (2.36 x 0.39)	400	800 kcmil
SSW-06.1400	2424	5 x 500	7 x 900 kcmil	160 x 10 (6.30 x 0.39)	4 x 300	4 x 900 kcmil	80 x 10 (3.15 x 0.39)	2 x 240	2 x 600 kcmil

Table 3.7 *- Recommended cables or bus bars for delta inside motor connection, according to UL508 and IEC 60092-352*

3.2.4 Connection of the Power Supply to the Soft-Starter

DANGER!
The AC input voltage must be compatible with the Soft-Starter SSW-06 nominal voltage.

DANGER!
Provide a power supply disconnecting switch. This disconnecting switch must disconnect the AC input voltage from the Soft-Starter SSW-06, when ever required (for instance during maintenance services).

DANGER!
If a disconnect switch or a contactor is inserted in the motor supply line, DO NOT operate these devices with a running motor or when the Soft-Starter SSW-06 is enabled.

ATTENTION!
Control of overvoltage in the line that supplies the Soft-Starter must be made using surge protection with a voltage of 680Vac (phase to phase connection) and energy absorption capacity of 40 joules (for models from 10A to 205A) and 80 joules (for models from 255A to 1400A), all for 220 to 575 Vac models.

NOTE!
Use wire sizing as recommended in tables 3.6 and 3.7. The correct tightening torque for the connector can be found in table 3.5. Use 70ºC (158ºF) copper wires only.

3.2.4.1 Short Circuit Capacity, Fuses, Circuit Breaker - UL

Table 3.8 presents the short circuit capacity, Standard Fault, of the power supply (symmetric Arms) at which the SSW-06 can be installed, provided that protected by means of regular fuses or circuit breakers, used in the UL tests.

Model	Nominal Rating	Short Circuit Rating ≤ 600V	Circuit Breaker (CB) - UL489 any MCCB	Ultra-fast Fuses
SSW-06.0010	10 A	5 kA	< 40 A	Ferraz 40 A NTD
SSW-06.0016	16 A	5 kA	< 40 A	Ferraz 60 A NTD
SSW-06.0023	23 A	5 kA	< 40 A	Ferraz 8 0 A NTD
SSW-06.0030	30 A	5 kA	< 40 A	Ferraz 80 A NTD
SSW-06.0045	45 A	5 kA	< 150 A	Ferraz 125 A NTD
SSW-06.0060	60 A	5 kA	< 150 A	Ferraz 125 A NTD
SSW-06.0085	85 A	10 kA	< 150 A	Bussmann 200 A
SSW-06.0130	130 A	10 kA	< 225 A	Bussmann 250 A
SSW-06.0170	170 A	10 kA	< 250 A	Bussmann 450 A
SSW-06.0205	205 A	10 kA	< 250 A	Bussmann 500 A
SSW-06.0255	255 A	18 kA	< 400 A	Bussmann 500 A
SSW-06.0312	312 A	18 kA	< 400 A	Bussmann 500 A
SSW-06.0365	365 A	18 kA	< 600 A	Bussmann 550 A
SSW-06.0412	412 A	18 kA	< 600 A	Bussmann 700 A
SSW-06.0480	480 A	30 kA	< 600 A	Bussmann 900 A
SSW-06.0604	604 A	42 kA	< 800 A	Bussmann 900 A
SSW-06.0670	670 A	42 kA	< 1200 A	Bussmann 900 A
SSW-06.0820	820 A	42 kA	< 1200 A	Bussmann 1400 A
SSW-06.0950	950 A	42 kA	< 1200 A	Bussmann 1600 A
SSW-06.1100	1100 A	85 kA ≤ 480 V	< 1600 A	Bussmann 1600 A
SSW-06.1400	1400 A	85 kA ≤ 480 V	< 2000 A	Bussmann 2000 A

Table 3.8 *- Short circuit capacity standard connection - UL Standard Fault*

The fuses in table 3.8 used in the SSW-06 UL tests are of the ultra-fast (aR) type, which also reduce the risk of SCRs being burned by over current transients.

Table 3.9, presents the short circuit capacity, High Fault, of the power supply (symmetric Arms) at which the SSW-06 can be installed within a closed panel, standard connection, provided that protected by means of circuit breakers, used in the UL tests.

Model	Nominal Rating	Short Circuit Rating ≤ 480V	Circuit Breaker (DIVQ)	Short Circuit Rating ≤ 600V	Circuit Breaker (DIVQ)	Minimum Enclosure Dimensions (WxHxL) (mm)		
SSW-06.0010	10 A	65 kA	WEG ACW125W-FTU15-3 or UBW225H-FTU40-3A or HFD3040L	18 kA	UBW225H-FTU40-3 A or HFD3040L	800	600	300
SSW-06.0016	16 A	65 kA	WEG ACW125W-FTU15-3 or UBW225H-FTU40-3A or HFD3040L	18 kA	UBW225H-FTU40-3 A or HFD3040L	800	600	300
SSW-06.0023	23 A	65 kA	WEG ACW125W-FTU15-3 or UBW225H-FTU40-3A or HFD3040L	18 kA	UBW225H-FTU40-3 A or HFD3040L	800	600	300
SSW-06.0030	30 A	65 kA	WEG ACW125W-FTU15-3 or UBW225H-FTU40-3A or HFD3040L	18 kA	UBW225H-FTU40-3 A or HFD3040L	800	600	300
SSW-06.0045	45 A	65 kA	WEG ACW125W-FTU125-3 or UBW225H-FTU150-3A or HFD3150L	18 kA	UBW225H-FTU150-3 A or HFD3150L	1000	600	400
SSW-06.0060	60 A	65 kA	WEG ACW125W-FTU125-3 or UBW225H-FTU150-3A or HFD3150L	18 kA	UBW225H-FTU150-3 A or HFD3150L	1000	600	400
SSW-06.0085	85 A	65 kA	WEG ACW125W-FTU125-3 or UBW225H-FTU150-3A or HFD3150L	18 kA	UBW225H-FTU150- 3A or HFD3150L	1000	600	400
SSW-06.0130	130 A	65 kA	WEG ACW250W-FTU160-3 or UBW225H-FTU225-3A or HFD3225L	18 kA	UBW225H-FTU225-3 A or HFD3225L	1000	600	400
SSW-06.0170	170 A	65 kA	WEG ACW250W-FTU200-3 or UBW250H-FTU250-3A or HJD3250	30 kA	UBW250L-FTU250-3 A or JDC3250	1000	600	400
SSW-06.0205	205 A	65 kA	WEG ACW250W-FTU200-3 or UBW250H-FTU250-3A or HJD3250	30 kA	UBW250L-FTU250-3 A or JDC3250	1000	600	400
SSW-06.0255	255 A	65 kA	WEG ACW400W-FTU300-3 or UBW400H-FTU400-3A or HKD3400	30 kA	UBW400H-FTU400-3 A or HKD3400	1200	900	400
SSW-06.0312	312 A	65 kA	WEG ACW400W-FTU300-3 or UBW400H-FTU400-3A or HKD3400	30 kA	UBW400H-FTU400-3 A or HKD3400	1200	900	400
SSW-06.0365	365 A	65 kA	WEG ACW800W-FTU500-3 or UBW600H-FTU600-3A or HLD3600	42 kA	UBW600L-FTU600-3 A or LDC3600	1200	900	400
SSW-06.0412	412 A	65 kA	WEG ACW800W-FTU800-3 or UBW600H-FTU600-3A or HLD3600	42 kA	UBW600L-FTU600-3 A or LDC3600	1200	900	400
SSW-06.0480	480 A	65 kA	WEG ACW800W-FTU800-3 or UBW600H-FTU600-3A or HLD3600	42 kA	UBW600L-FTU600-3 A or LDC3600	1200	900	400
SSW-06.0604	604 A	65 kA	WEG ACW800W-FTU800-3 or UBW800H-FTU800-3A or HMDL3800	-	-	1200	900	400
SSW-06.0670	670 A	65 kA	WEG ACW800W-FTU800-3 or ABB T7H 1200 or NGC312033E or UBW1200L-ELS1200-3A	-	-	1220	1220	405
SSW-06.0820	820 A	65 kA	ABB T7H 1200 or NGC312033E or UBW1200L-ELS1200-3A	-	-	1220	1220	405
SSW-06.0950	950 A	65 kA	UBW1200H-ELS1200-3A or NGH312033EC	-	-	2000	800	600
SSW-06.1100	1100 A	-	-	-	-	2200	1000	600
SSW-06.1400	1400 A	-	-	-	-	2200	1000	600

Table 3.9 *- Short circuit capacity standard connection - UL High Fault*

3.2.4.2 Input Circuit Breakers and Fuses - IEC

Ultra-fast fuses (aR), regular fuses or circuit breakers:

For Coordination Type 1, regular fuses or circuit breakers can be used, according to IEC 60947-4-2, which will protect the installation against short circuits, however, the SCRs will not be protected. Circuit breakers of the table 3.8 and table 3.9.

For Coordination Type 2, the fuses to be used in the input must be for protection of semiconductors, ultra-fast type (aR), according to IEC 60947-4-2. They reduce the risk of the SCRs to burn out because of overcurrent transients

Model	I²t SCR (A²s)	FNH aR Blade Contacts	FNHFE aR Flush End
SSW-06.0010	720	FNH00-40K-A	-
SSW-06.0016	720	FNH00-40K-A	-
SSW-06.0023	400	FNH00-80K-A	-
SSW-06.0030	400	FNH00-125K-A	-
SSW-06.0045	10000	FNH00-125K-A	-
SSW-06.0060	15000	FNH00-160K-A	-
SSW-06.0085	80000	FNH00-250K-A	FNH3FEM-450Y-A
SSW-06.0130	84000	FNH1-400K-A	FNH3FEM-450Y-A
SSW-06.0170	245000	FNH2-630K-A	FNH3FEM-450Y-A
SSW-06.0205	320000	FNH2-630K-A	FNH3FEM-450Y-A
SSW-06.0255	238000	FNH3-710K-A	FNH3FEM-500Y-A
SSW-06.0312	238000	FNH3-710K-A	FNH3FEM-550Y-A
SSW-06.0365	320000	FNH3-710K-A	FNH3FEM-630Y-A
SSW-06.0412	1452000	FNH3-1000K-A	FNH3FEM-700Y-A
SSW-06.0480	4250000	2 x FNH2-630K-A	FNH3FEM-800Y-A
SSW-06.0604	4250000	2 x FNH2-710K-A	FNH3FEM-900Y-A
SSW-06.0670	4250000	2 x FNH3-800K-A	FNH3FEM-1000Y-A
SSW-06.0820	4250000	2 x FNH3-900K-A	FNH3FEM-1400Y-A
SSW-06.0950	14000000	2 x FNH3-1000K-A	FNH23FEA-1600Y-A
SSW-06.1100	14000000	3 x FNH2-710K-A	FNH23FEA-1800Y-A
SSW-06.1400	15125000	3 x FNH3-900K-A	2 x FNH3FEM-1250Y-A

Table 3.10 *- I²t of the SCR and aR Weg fuses standard connection*

Model	I²t SCR (A²s)	FNH aR Blade Contacts	FNHFE aR Flush End
SSW-06.0045	10000	FNH1-200K-A	-
SSW-06.0060	15000	FNH1-200K-A	-
SSW-06.0085	80000	FNH2-400K-A	-
SSW-06.0130	84000	FNH3-500K-A	-
SSW-06.0170	245000	FNH3-710K-A	FNH3FEM-550Y-A
SSW-06.0205	320000	FNH3-710K-A	FNH3FEM-630Y-A
SSW-06.0255	238000	2 x FNH3-400K-A	FNH3FEM-700Y-A
SSW-06.0312	238000	3 x FNH2-310K-A	FNH3FEM-900Y-A
SSW-06.0365	320000	2 x FNH3-500K-A	FNH3FEM-1000Y-A
SSW-06.0412	1452000	2 x FNH3-710K-A	FNH3FEM-1100Y-A
SSW-06.0480	4250000	2 x FNH3-1000K-A	FNH3FEM-1250Y-A
SSW-06.0604	4250000	2 x FNH3-1000K-A	FNH23FEA-1600Y-A
SSW-06.0670	4250000	3 x FNH3-800K-A	FNH23FEA-1800Y-A
SSW-06.0820	4250000	3 x FNH3-800K-A	2 x FNH3FEM-1100Y-A
SSW-06.0950	14000000	3 x FNH3-900K-A	2 x FNH3FEM-1250Y-A
SSW-06.1100	14000000	3 x FNH3-1000K-A	2 x FNH3FEM-1400Y-A
SSW-06.1400	15125000	4 x FNH3-1000K-A	3 x FNH3FEM-1250Y-A

Table 3.11 *- I²t of the SCR and aR Weg fuses delta inside motor connection*

Ultra-fast fuses (aR), with I^2t smaller than or equal to 75 % of the value of the SCR indicated (A^2s) in table 3.10 and table 3.11.

NOTE!
The maximum I^2t of the fuse of the SSWs varies according to the design of the SCR used; therefore, higher rated currents may present lower I^2t.

The fuse rated current should preferably be equal to or higher than the motor starting current in order to prevent cyclic overloads and the tripping of the fuse in the prohibited area of the Time x Current curve.

The proper sizing of the fuse should take into account: the local standards for electrical installations, the starting cycle, number of starts per hour, starting current and starting time, ambient temperature and altitude.

For the correct sizing of the fuses, see WEG Fuse Catalog:
www.weg.net
Automation - Fuses aR and gL/gG - Type NH Blade Contact, NH Flush End and Diametral.
Annex 1: Sizing Criteria for Ultra-Fast Fuses aR Blade Contact and Flush End.
Annex 2: Table for aR Fuse Sizing to Protect SSW Soft-Starters and CFW Inverters.

3.2.5 Connection of the SSW-06 Soft-Starter to the motor

DANGER!
Power factor correction capacitors should never be fitted to the output of the Soft-Starter SSW-06 (U / 2T1, V / 4T2 and W / 6T3).

ATTENTION!
For the protection based on the current reading and indication to work correctly, in case of overload protection, the nominal current of the motor cannot be lower than 30% of the nominal current of the SSW-06 Soft-Starter.
It is not recommended to use motors with the load working duty lower than 50% of its nominal current.

NOTE!
Use wire sizing and fuses as recommended in table 3.6, 3.7 and 3.9. The connector tightening torque is as indicated in table 3.5. Use 70ºC (158ºF) copper wires only.

NOTE!
Soft-Starter SSW-06 is provided with an electronic protection against motor overload. This protection must be set according to the specific motor. When several motors are connected to the same Soft-Starter SSW-06, use individual overload relays for each motor.

The SSW-06 Soft-Starter can be connected to the motor in two ways, according to items 3.2.5.1 and 3.2.5.2.

3.2.5.1 Standard Three-Wire Connection (P150=0=Inactive)

The standard 3 wire connection allows the SSW-06 Soft-Starter line current to be equal to the motor current.

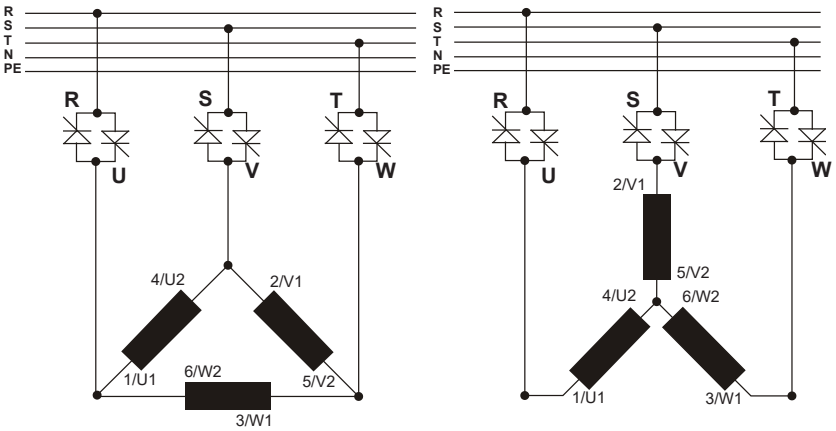

Figure 3.10 *- Soft-Starter SSW-06 with standard connection*

3.2.5.2 Inside Delta Motor Connection (P150=1=Active)

In this kind of connection, the SSW-06 Soft-Starter line current is equal to approximately 58% of the nominal current of the motor.

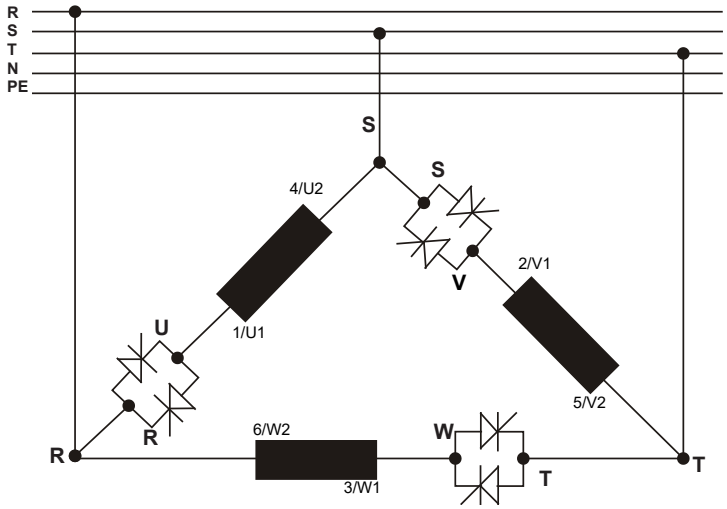

Figure 3.11 *- Soft-Starter SSW-06 Inside Delta Motor Connection*

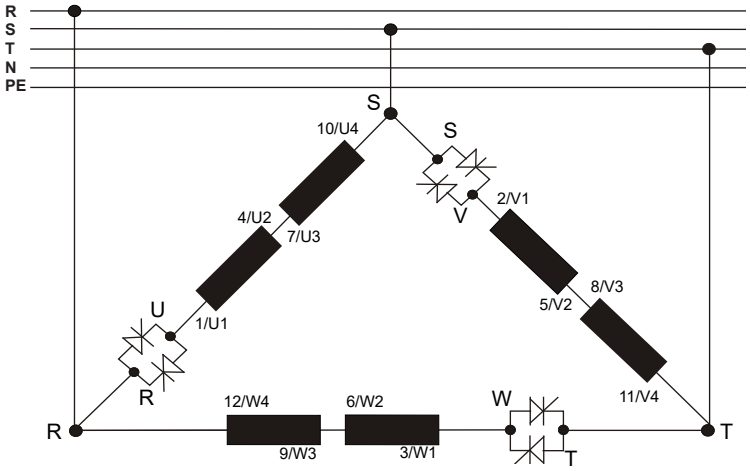

Figure 3.12 *- Soft-Starter SSW-06 Inside Delta Motor Connection - motor with double delta series connected*

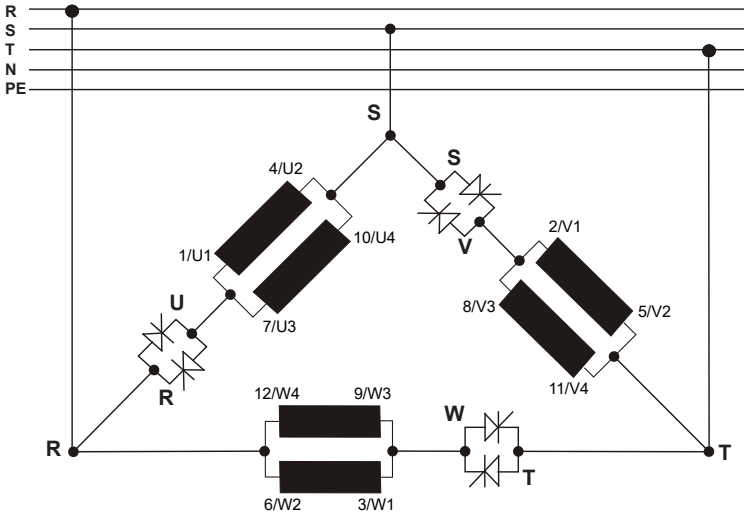

Figure 3.13 *- Soft-Starter SSW-06 Inside Delta Motor Connection - motor with double delta parallel connected*

ATTENTION!
For inside delta motor connection, the motor must have a nominal voltage for delta connection. The inside delta motor connection cannot be used for 690V line voltage.

NOTES!

1) For motor inside delta connection, the SSW-06 Soft-Starter connection cables to the power supply, fuses and/or the main contactor must support the nominal current of the motor. The motor connection cables to the Soft-Starter and/or the external By-pass contactor connection must support 58% of the nominal current of the motor.

2) Due to the presence of high currents and large cable size requirements, we also recommend the use of copper busbars for connecting the Soft-Starter SSW-06 to the power supply.

3) During starting, the motor current in relation to the Soft-Starter current
is 1.50. However, at full voltage (after the start time of the motor) the current relation is 1.73.

ATTENTION!
Pay attention to the connection of the motor to the SSW-06 Soft-Starter, respect the connection diagrams shown in the figures above according to the type of motor windings. If it is necessary to change the motor rotating direction, only invert the SSW-06 Soft-Starter connections to the power supply.
Keep the electronics turned off during the connection changes.

ATTENTION!
Ensure correct setting of Parameter P150 before the motor is switched ON. Soft-Starter SSW-06 may be damaged, when this parameter setting is not correct.

P150	Action
0 (Inactive)	Soft-Starter SSW-06 with standard connection to motor
1 (Active)	Soft-Starter SSW-06 with inside delta motor connection

Table 3.12 *- Connection of the Soft-Starter to the motor*

3.2.6 Grounding Connections

DANGER!
The Soft-Starter SSW-06 must be grounded for safety purposes (PE). The earth or ground connection must comply with the local regulations. For grounding, use cables with cross sections as indicated in table 3.6. Make the ground connection to a grounding bar or to the general grounding point (resistance ≤ 10 ohms).

ATTENTION!
The Soft-starters SSW-06 can be used in power supply grounded of the type TT or TN (IEC) or in power supply of the type IT, since that grounded by an impedance.

DANGER!
Do not use the neutral conductor for grounding purposes. Use a specific ground conductor.

ATTENTION!
Do not share the ground wiring with other equipment that operate with high currents (for instance, high voltage motors, welding machines, etc.). When more than one Soft-Starter SSW-06 is used, see figure 3.14.

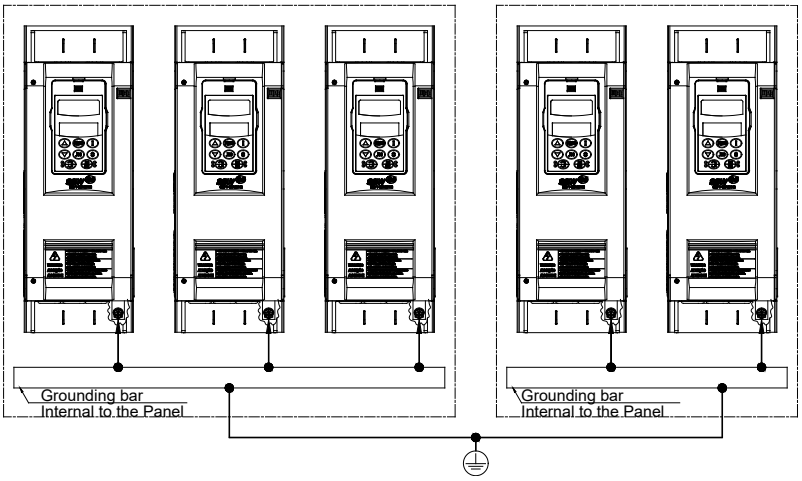

Figure 3.14 *- Grounding connections for more than one Soft-Starter SSW-06*

EMI – Electromagnetic interference:
The Soft-Starter SSW-06 is developed to be used in industrial systems (Class A) as per Norm EN60947-4-2.
It's necessary to have a distance of 0.25m (10in) between the Soft-Starter SSW-06 control cables and motor cables. Example: PLC wiring, temperature controllers, thermocouple cables, etc.

Grounding the motor frame:
Always ground the motor frame. Ground the motor in the panel where the Soft-Starter SSW-06 is installed. The Soft-Starter SSW-06 output wiring to the motor must be laid separately from the input wiring, as well as from the control and signal cables.

3.2.7 Fan Connections

Available in models greater than 255A.
The nominal voltage of the fans can be selected in models from 255A to 820A.
For models from 950A to 1400A the voltage selection is fixed, according to the product specification, refer to item 2.4.

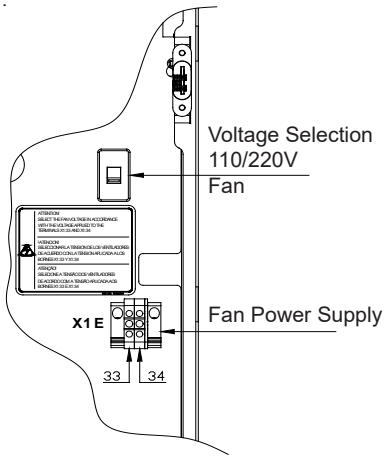

Figure 3.15 *- Selection of the Fan Voltage*

Connector X1E pins 33 and 34. More details see figure 3.16.

NOTE!
For models from 255A to 820A the fans are switched on if the heatsink temperature is above 70ºC (158ºF). Do not forget to connect the fan power supply and select the fan supply voltage for the models higher or equal than 255A.

3.2.8 Signal and Control Connections

The signal connections (analog outputs) and control (digital inputs and relay outputs) are made on the electronic board connectors.
Connectors:
CCS6 and CPS61 on the models 10A to 30A. CCS6 and CPS63 or CPS66 on the models 45A to 365A and 950A to 1400A. CCS6 and CPS64 or CPS65 on the models 412A to 820A.

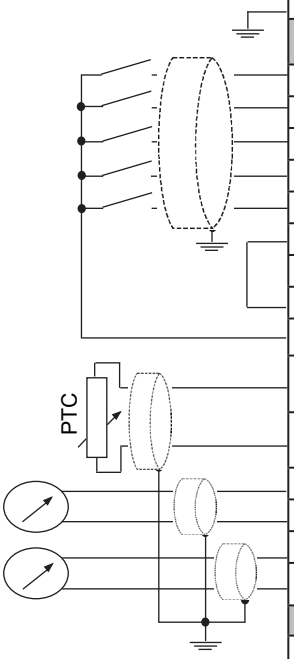

Connector X1A		Description	Specifications
1	Phase	Electronic Supply	(110 to 230)Vac (-15% to +10%) or (94 to 253)Vac Operation Current: 280mA Max.
2	Neutral		
PE	Ground		
Connector X1B		**Factory Standard Function**	**Specifications**
3	DI1	Motor Enable/Disable	5 isolated digital inputs Minimum high level: 18Vdc Maximum low level: 3Vdc Maximum voltage: 30Vdc Input current: 11mA@24Vdc
4	DI2	Error Reset	
5	DI3	Not Used	
6	DI4	Not Used	
7	DI5	Not Used	
8	COM	Common point of the Digital Inputs	Only use for Digital Inputs
9	COM	Common point of the Digital Inputs	
10	DGND	0V reference of the 24Vdc source	
11	24Vdc	Digital Input Supply	
12	PTCB	DI6 - Not Used Input for motor Thermistor	Operation: 3k9Ω Release: 1k6Ω Minimum resistance: 100 PTCB referenced to DGND Through 249Ω resistor
13	PTCA		
14	AGND	Analog Output 1 - Not used	(0 to 10)V, RL 10k (maximum load) Resolution: 11 bits
15	AO1		
16	AGND	Analog Output 2 - Not used	(0 to 20)mA or (4 to 20)mA RL=500Ω/1%@10V Resolution: 11 bits
17	AO2		
Connector X1C		**Factory Standard Function**	**Specifications**
18	RL1 NO	Relay Output - Run	Contact capacity: 1A 240Vac
19	RL1 NO		
20	RL2 NO	Relay Output - Full Voltage	
21	RL2 NO		
22	RL3 NO	Relay Output – No Error	
23	RL3 C		
24	RL3 NC		
Connector X1D		**Description**	**Specifications**
25	TERM.	Overtemperature thermostat	Internal connection of the Soft-Starter
26	TERM.		
27	TC 1/R RED	Current transformer phase R	
28	TC 1/R BLACK		
29	TC 2/S RED	Current transformer phase S	
30	TC 2/S BLACK		
31	TC 3/T RED	Current transformer phase T	
32	TC 3/T BLACK		
Connector X1E		**Description**	**Specifications**
33	Phase	Fan Supply (from model 255A)	(104 to 127)Vac or (207 to 253)Vac Operation current: see table 3.4
34	Neutral		

Note: NC = Normally Closed Contact
NO = Normally Open Contact
C = Common

Figure 3.16 *- Control Terminal Description*

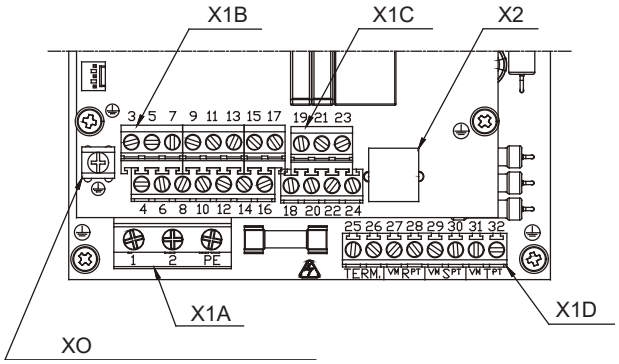

Figure 3.17 *- Control connector positions*

For signal and control wire installation, adopt the following procedures:

1) The connections of the SSW-06 digital inputs can be carried out in several ways. They can be supplied by auxiliary internal +24Vdc source by using the 0V as a common point or by the +24Vdc source. Depending on the application requirements,they can also be supplied by external +24Vdc source, connected to PLCs, by using the 0V as common point or by the +24Vdc source:

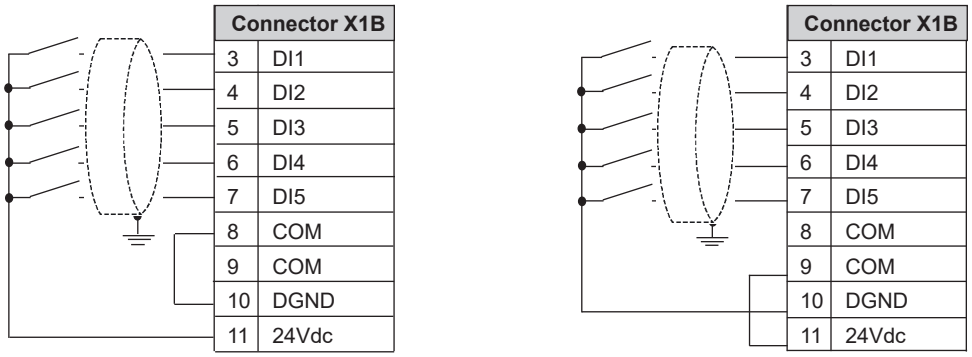

Figure 3.18 *- Connection diagram of the digital inputs using the auxiliary internal source*

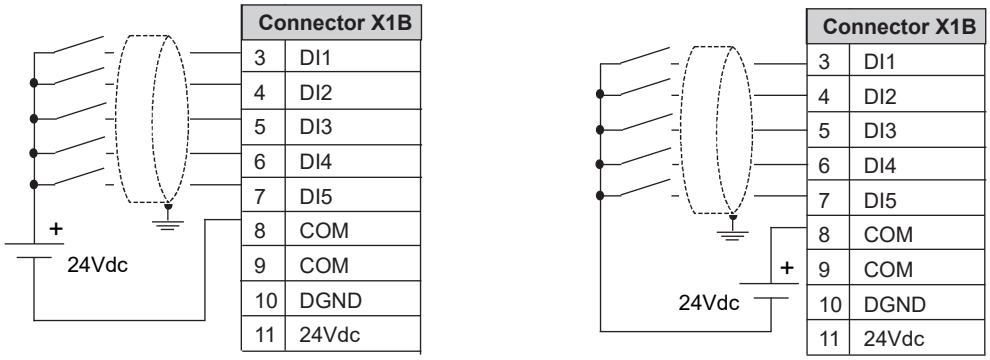

Figure 3.19 *- Connection diagram of the digital inputs using an external source*

NOTE!

1) The auxiliary electronic power supply of the SSW-06 Soft-Starter of +24Vdc shall only be used for the supply of the digital inputs.
2) The SSW-06 Soft-Starter factory default is with the pins 8 and 10 of the X1B connector bridged (wire bridge).
3) Cable cross section (0.5 to 1.5) mm^2.
4) Maximum torque: 0.50 N.m (4.50 ibf.in).
5) X1B wiring must be connected with shielded cables and installed separately from other wiring (power, control at 110V/220V, etc.), according to table 3.13.

Wiring Length	Min. separation distance
≤ 30 m (98.4 ft)	≥ 10 cm (3.94 in)
> 30 m (98.4 ft)	≥ 25 cm (9.84 in)

Table 3.13 *- Wiring separation distances*

If the crossing of these cables is unavoidable, install them perpendicular, maintaining a minimum separation distance of 5cm (2 in) at the crossing point.

Connect the shield as shown below:

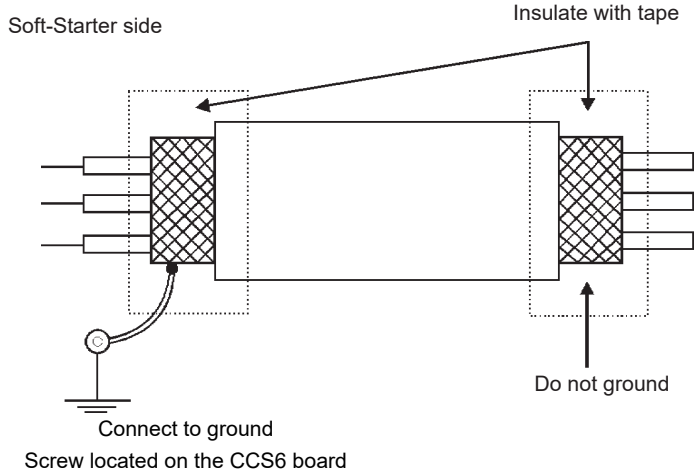

Figure 3.20 *- Shield connection*

6) For wiring distances longer than 50m (150ft), it is necessary to use galvanic isolators for the X1B:3...17signals.

7) Relays, contactors, solenoids or electromagnetic braking coils installed near Soft-Starters can generate interference in the control circuit. In order to eliminate this interference, connect RC suppressors in parallel with the coils of AC relays. Connect a free - wheeling diode in case of DC relays/coils.

8) When an external keypad is used (Refer to Chapter 9), separate the cable that connects the keypad to the Soft-Starter SSW-06 from other cables, maintaining a minimum distance of 10cm (4 in) between them.

This connector is used to make a standard RS-232 communication

3.2.9 RS-232, X2 Serial Communication Connection

line between the Soft-Starter SSW-06 and a PC and/or PLC.
For more details see the Serial Communication Manual of the Soft-Starter SSW-06.

3.2.10 XC8 Serial Communication Board Connection

An optional board of serial communication, standard RS-485 with galvanic insulation, or USB, can be attached to this connector.
For more details see the Serial Communication Manual of the Soft-Starter SSW-06 and chapter 9.

3.2.11 XC6 Fieldbus Communication Board Connection

An optional Profibus DP or DeviceNet Communication board can be attached to this connector.
For more details see the Profibus DP or DeviceNet Communication Manual of the Soft-Starter SSW-06 and chapter 9.

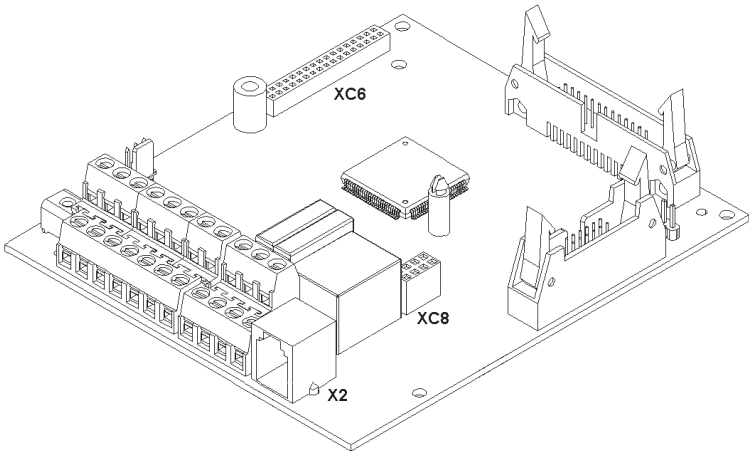

Figure 3.21 *- X2, XC6 and XC8 Connector*

3.3 RECOMMENDED SET-UPS

In this item some suggestive set-ups are presented, which can be used completely or in part to elaborate the desired control.
The main warnings, for all the suggestive set-up, listed below, are related in the diagrams through their respective numbers.

NOTES!

(1) For the protection of all of the electrical installation, the use of fuses or circuit breakers in the main power supply circuit is necessary.
The use of high speed semiconductor fuses are not necessary for the functioning of the SSW-06 Soft-Starter, but its use is recommended for the complete protection of the SSW-06.

(2) The transformer “T1” is optional and should be used when the line voltage is different from the electronics and fan voltage;

(3) To protect the motor against destruction by possible short-circuits in the power circuit of the Soft-Starter SSW-06 use an isolating contactor (K1) or circuit-breaker (Q1);

4. X1E (33 and 34) is only available on the models fitted with cooling fans;

5. For integral motor protection the installation of one or more PTC thermistors (PTC at DI6) or thermostats (external fault at DI4 to DI6) is recommended;

6. Remember that when a command via two-wire digital input is used (the switch is normally open with retention), every time the power supply returns, after any fault, the motor starts immediately if the switch remains closed;

7. In case of maintenance services, remove the power supply fuses or disconnect the power supply, thus ensuring complete equipment disconnection from power.

8. An emergency stop can be obtained by disconnecting the electronics power supply.

9. The contactors must be of the same model and must support the motor starting current. For safety reasons, auxiliary contacts must be used to keep both contactors from closing at the same time.

10. Use a digital input set to “General Enable” to disable the motor without braking. Use a digital input set to “No Braking”, for safety reasons, with the possibility of fitting a motor stop sensor to disable the braking.

11. The use of an external By-pass contactor is optional for models 950A to 1400A that do not have an internal By-pass contactor. This contactor is also recommended, in models with an internal By-pass, for use in applications where the motor can frequently present a locked rotor during the full operation cycle.

12. To maintain the current indications and protections, when using the external By-pass contactor, it is necessary to place the current transformers on the Soft-Starter output. The current transformers must be placed in the correct positions and directions as indicated. For more details see chapter 9.6.

3.3.1 Recommended Set-up using Keypad Command with Isolating Contactor

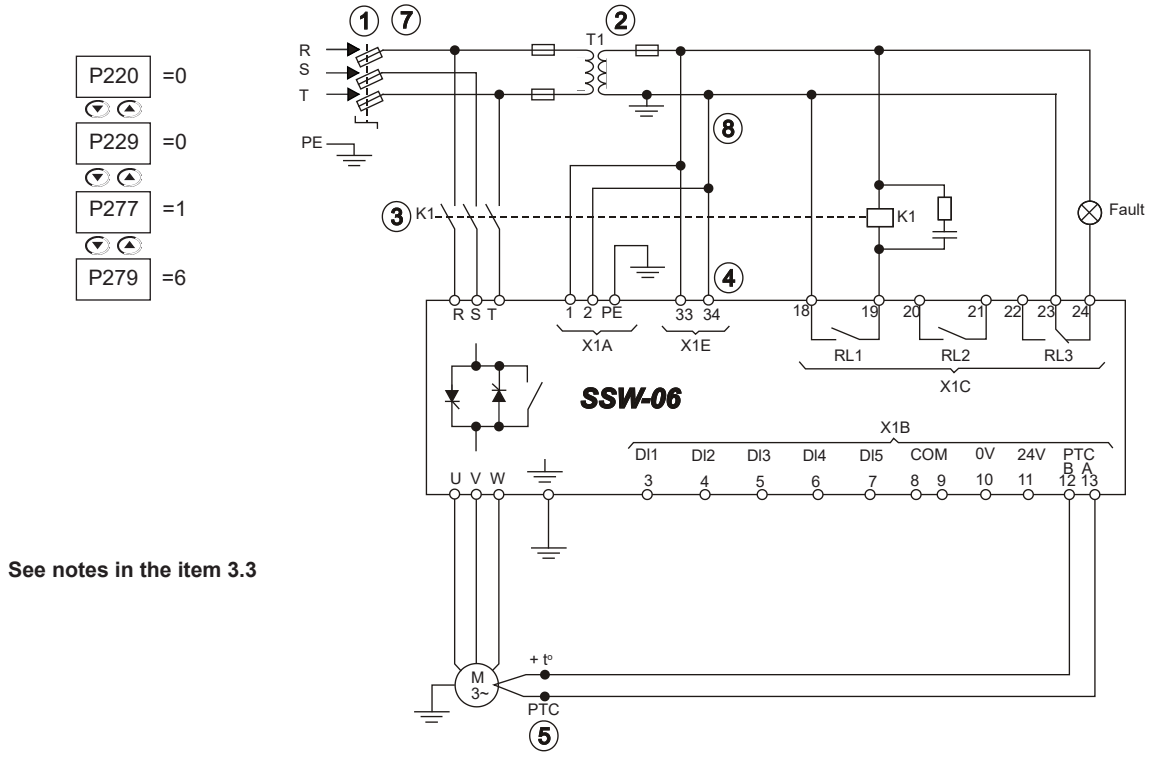

Figure 3.22 *- Recommended Set-up using Keypad command with isolating contactor*

3.3.2 Recommended Set-up using Keypad Command with Circuit-breaker

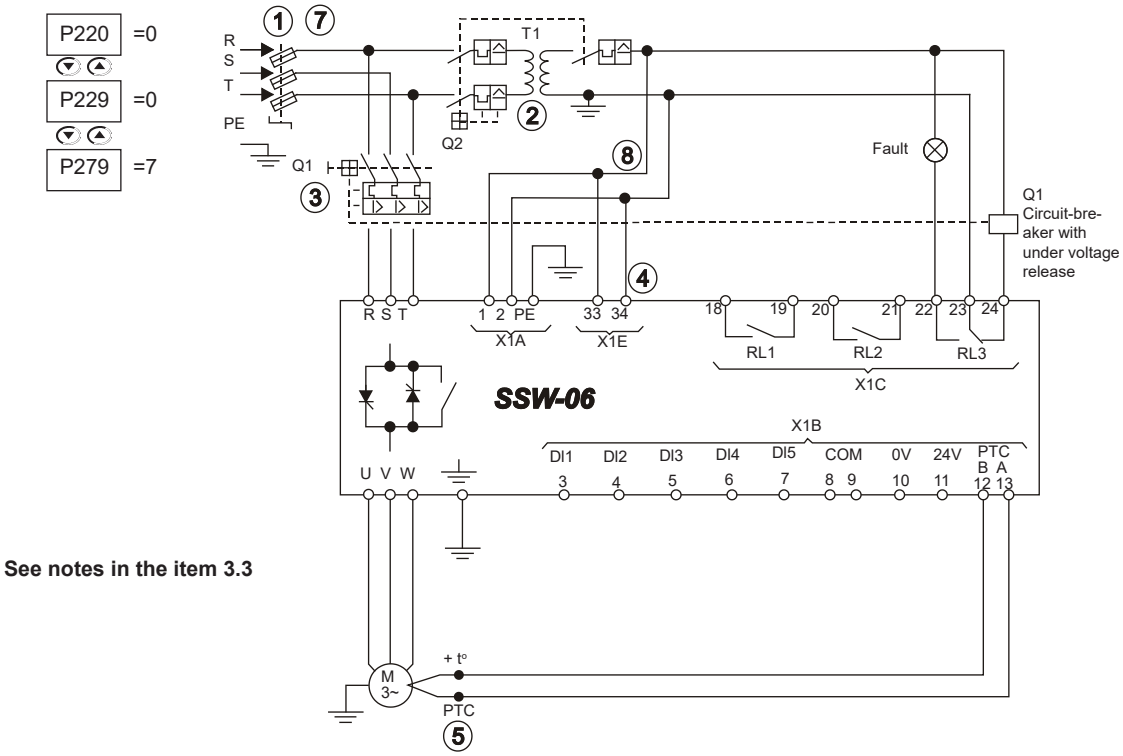

Figure 3.23 *- Recommended Set-up using Keypad command with circuit-breaker*

3.3.3 Recommended Set-up with Command via Two-wire Digital Inputs

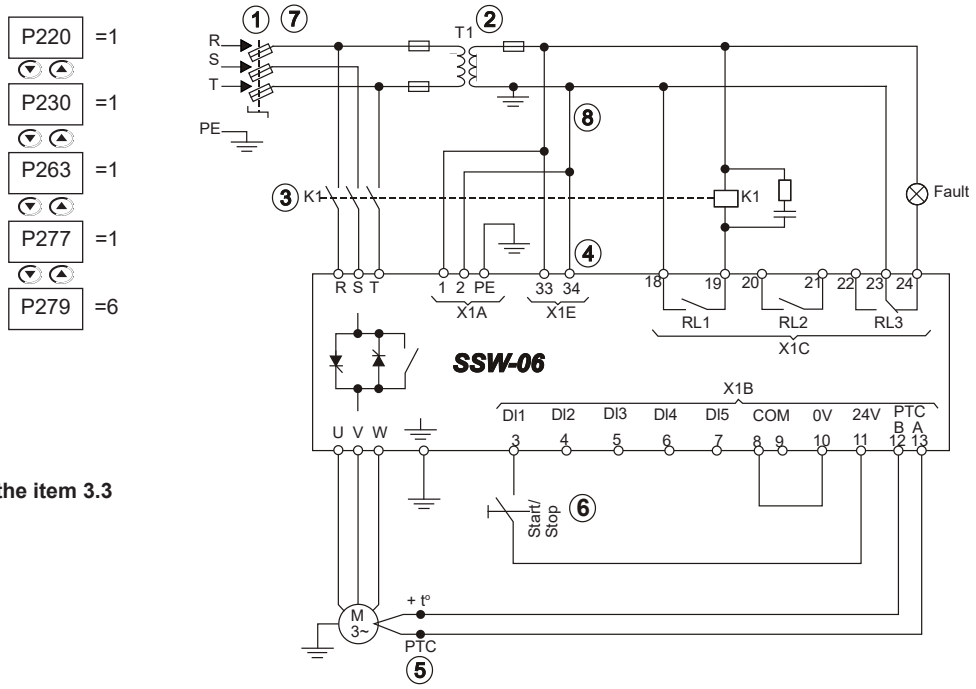

See notes in the item 3.3

Figure 3.24 *- Recommended set-up with command via two-wire digital inputs*

3.3.4 Recommended Set-up with Command via Three-wire Digital Inputs

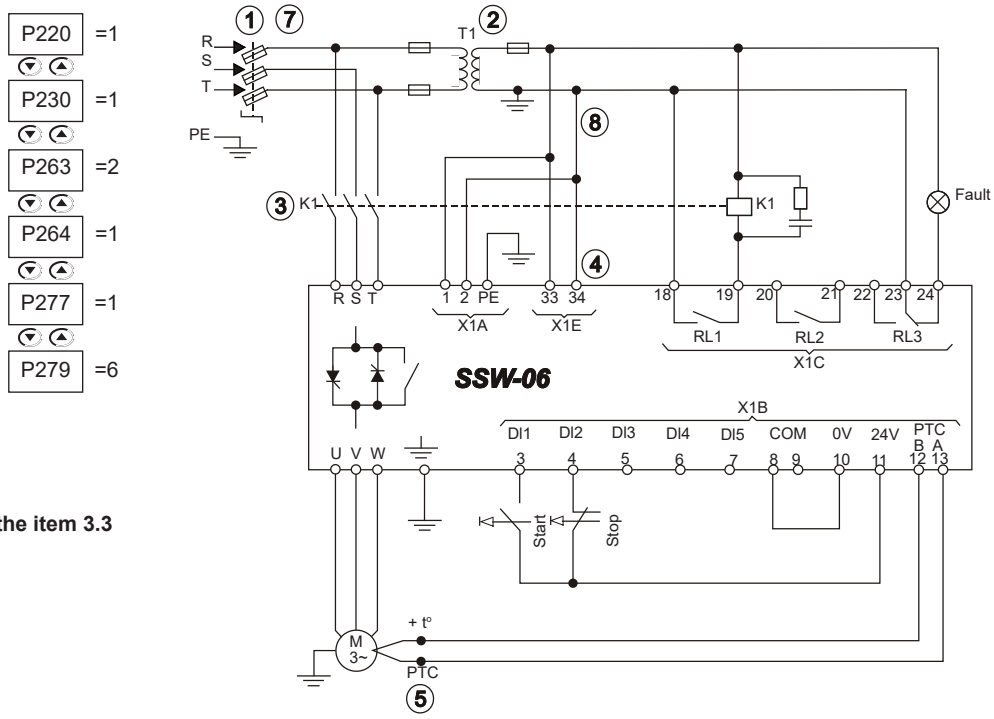

See notes in the item 3.3

Figure 3.25 *- Recommended set-up with command via three-wire digital inputs*

3.3.5 Recommended Set-up with Command via Three-wire Digital Input and Inside Delta Motor Connection

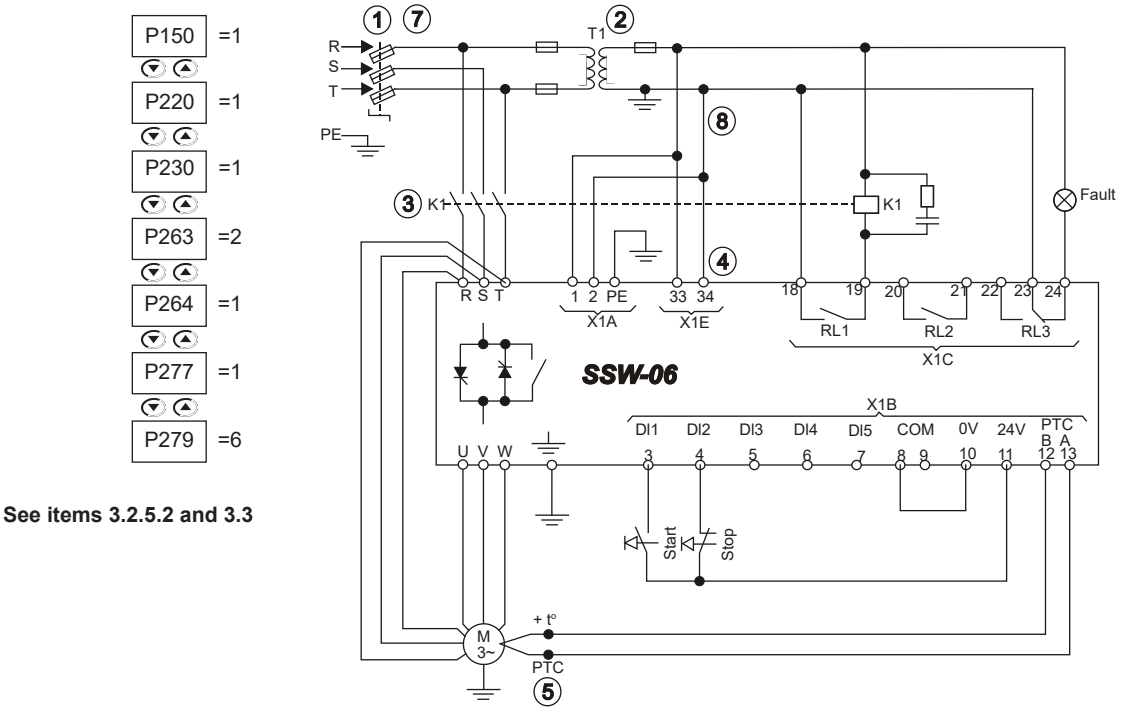

Figure 3.26 *- Recommended set-up with command via three-wire digital input and inside delta motor connection*

3.3.6 Recommended Set-up with Command via Three-wire Digital Input or Serial Communication

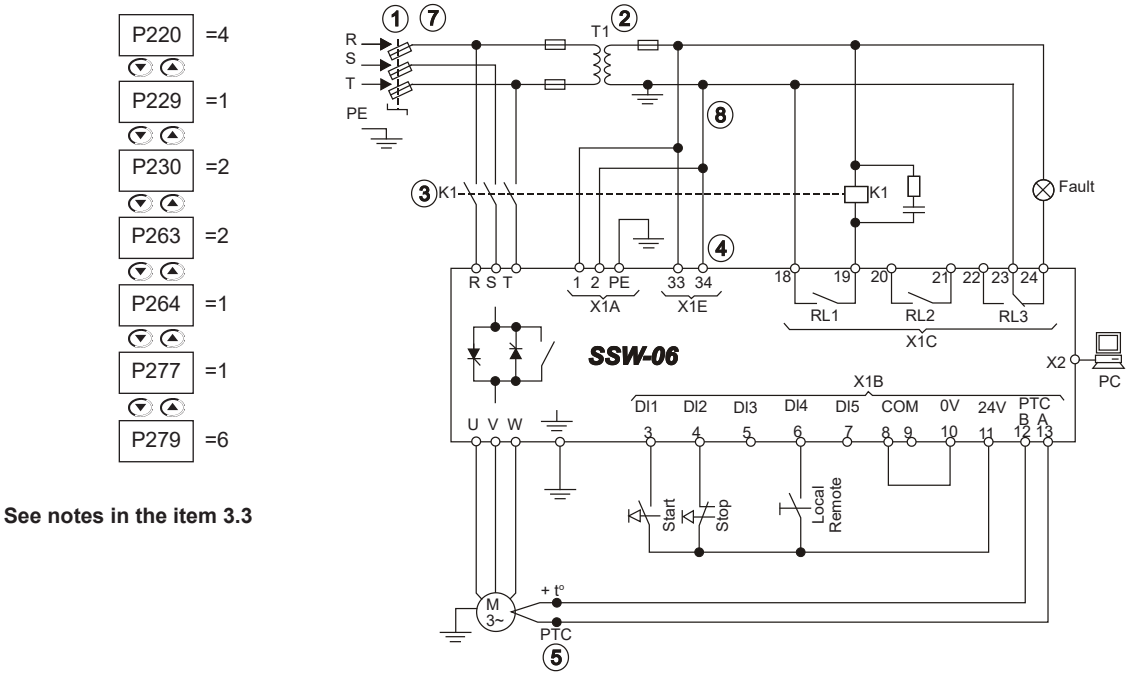

Figure 3.27 *- Recommended set-up with command via three-wire digital input or serial communication*

3.3.7 Recommended Set-up with Command via Three-wire Digital Input or Fieldbus Communication

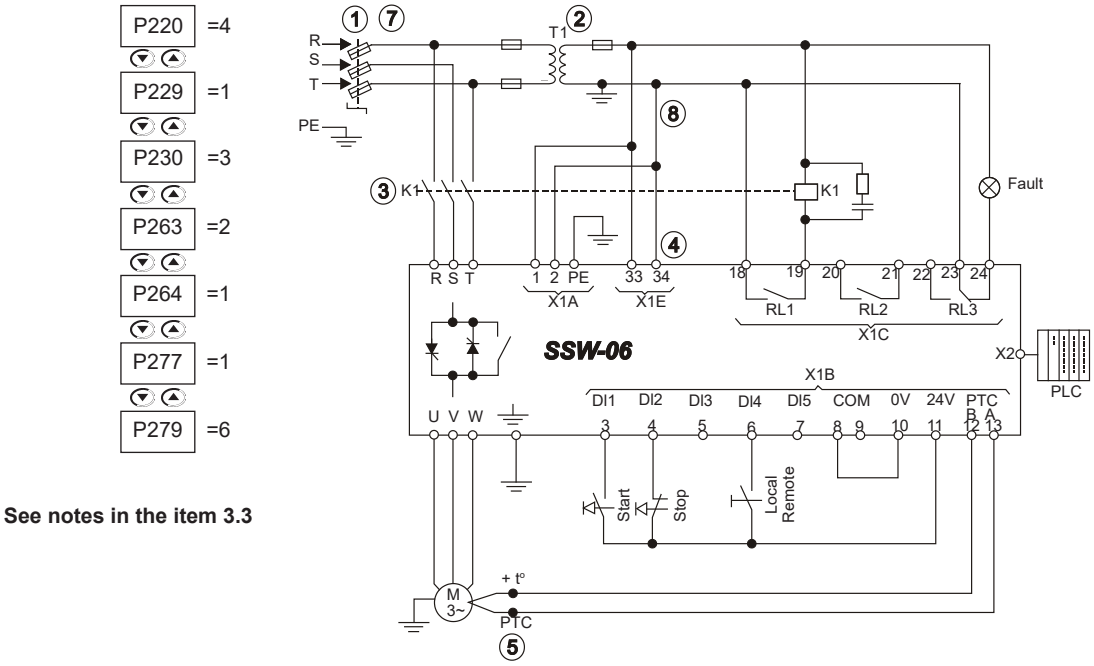

Figure 3.28 *- Recommended set-up with command via three-wire digital input or fieldbus communication*

3.3.8 Recommended Set-up with Command via Digital Inputs and direction of rotation

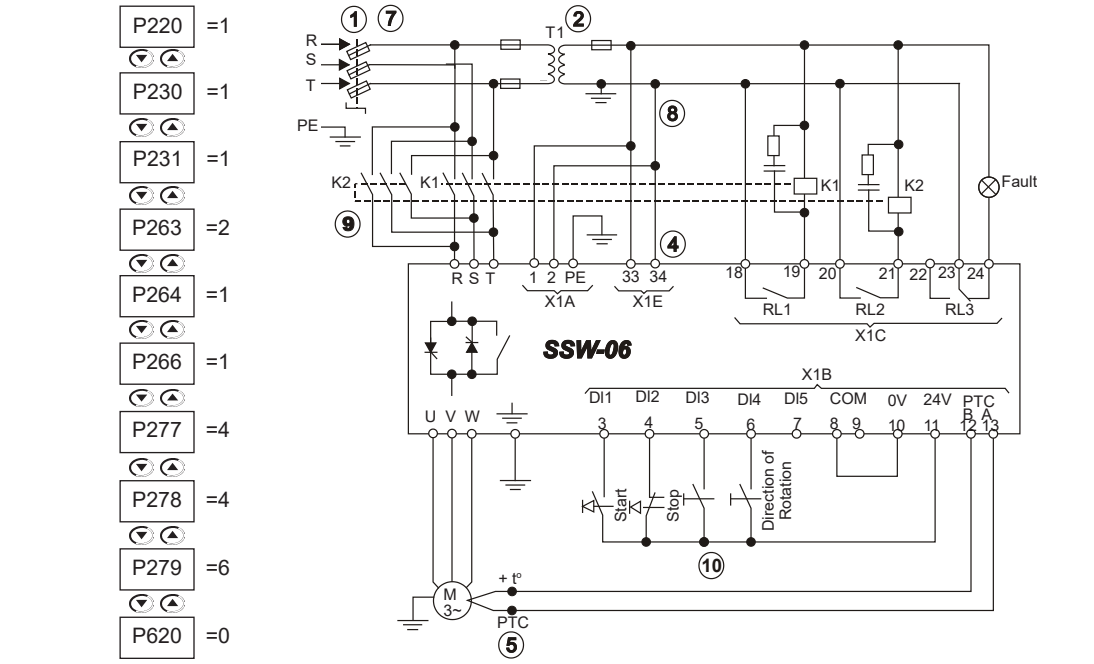

Figure 3.29 *- Recommended Set-up with Command via Digital Inputs and direction of rotation*

3.3.9 Recommended Set-up with Command via Digital Inputs and Reverse Braking

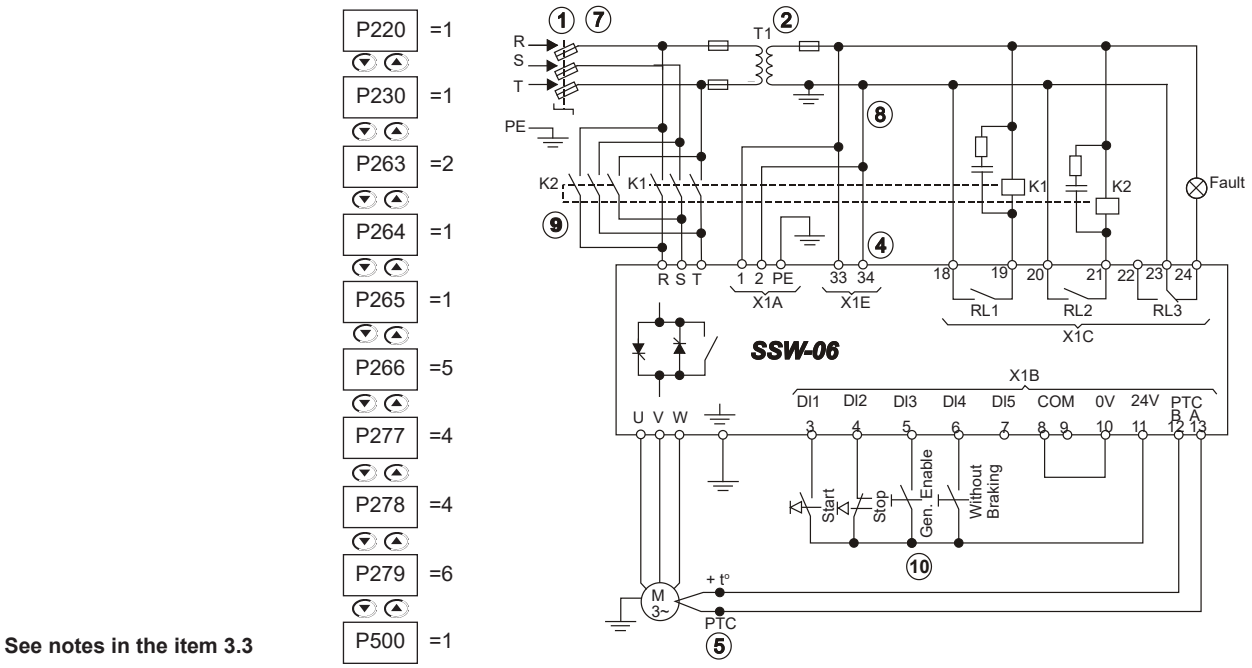

Figure 3.30 *- Recommended Set-up with Command via Digital Inputs and Reverse Braking*

3.3.10 Recommended Set-up with Command via Digital Inputs and Optimal Braking

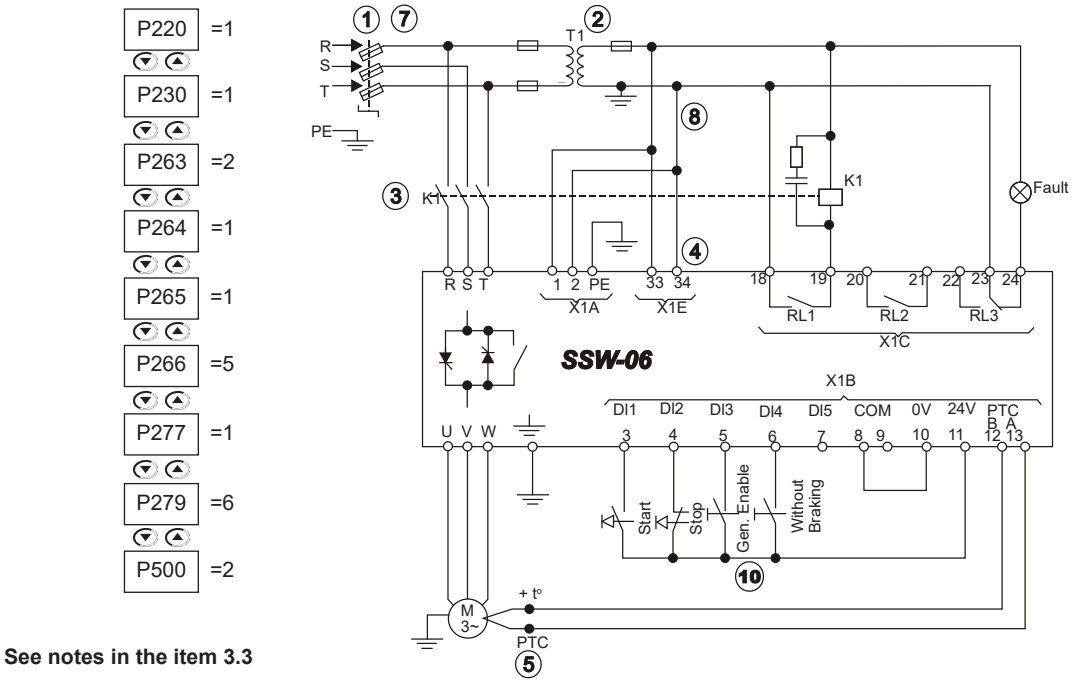

Figure 3.31 *- Recommended Set-up with Command via Digital Inputs and Optimal Braking*

3.3.11 Recommended Set-up with Command via Digital Inputs and DC-Braking

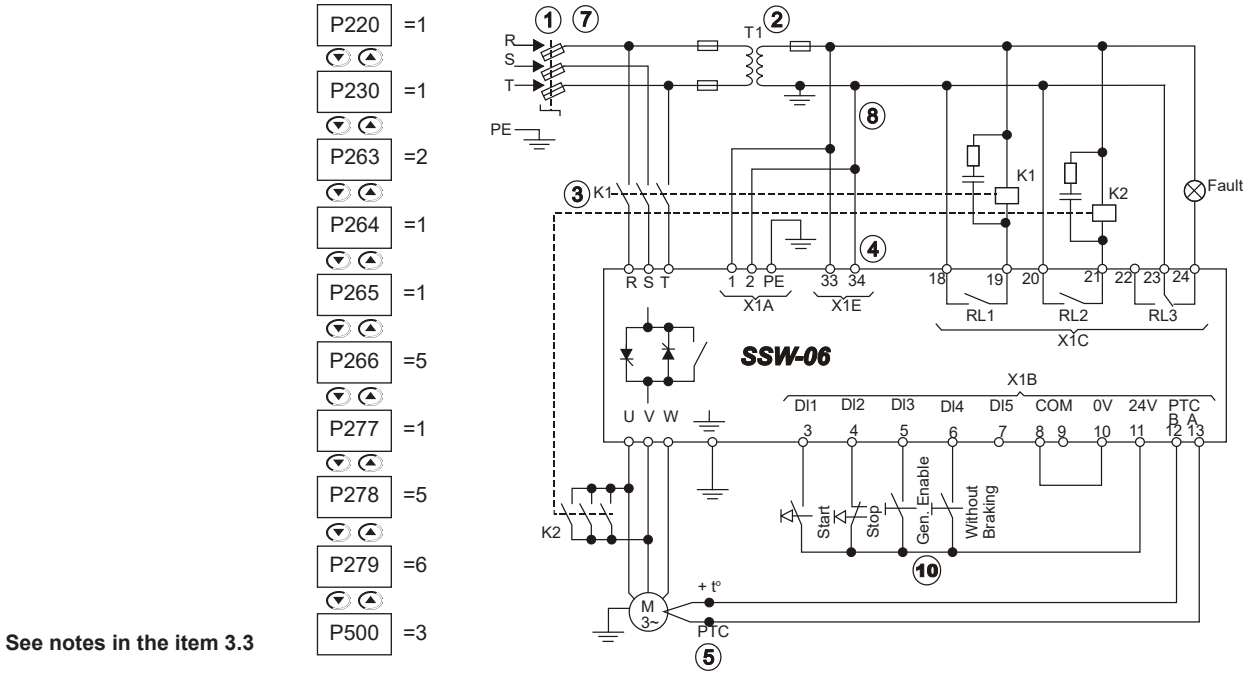

Figure 3.32 *- Recommended Set-up with Command via Digital Inputs and DC-Braking*

3.3.12 Recommended Set-up with Command via Digital Inputs and External By-pass Contactor

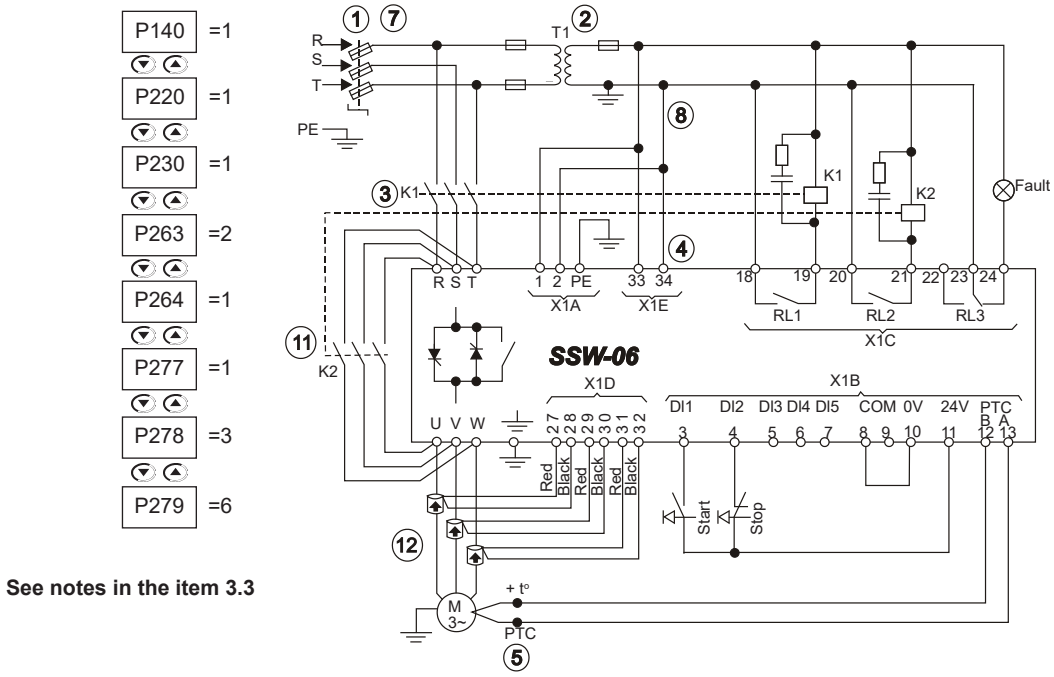

Figure 3.33 *- Recommended Set-up with Command via Digital Inputs and External By-pass Contactor*

3.3.13 Symbols

	Electrical connection between two signals
	Connection Terminals
	Coil - Relay, Contactor
	Normally Open Contact (NO)
	Indicator light
	Circuit-breaker (opens under load)
	Resistor
	Capacitor

	Fuse
	Thyristor/SCR
M 3~	Three-phase Motor
	Emergency Button
	Transformer
	N.O. Contact (with retention)
	Normally Closed (NC) Push-button
	Normally Open (NO) Push-button
	Circuit-breaker with under voltage release

3.4 EUROPEAN DIRECTIVES FOR ELECTROMAGNETIC COMPATIBILITY REQUIREMENTS FOR INSTALLATION

The SSW-06 series Soft-Starters were designed considering all the safety and electromagnetic compatibility aspects.
SSW-06 Soft-Starters do not have any intrinsic function if they are not connected to other components (for example, with a motor). For this reason, the basic product does not have the CE label indicating conformity with the electromagnetic compatibility directive.
The end user takes personal responsibility for the EMC compliance of the whole installation.However, when installed according to the recommendations described in the User's Guide and including the recommended filters/EMC measures the SSW-06 fulfill all requirements of the EMC Directive (2004/108/EC), as defined by Product Standard EN60947-4-2 (2000) + A1 (2002) - "*low-voltage switchgear and control-gear part 4.2: Ac Semi-conductor Motor controllers and Starters*" specific standard for drives.
The conformity of the whole SSW-06 series is based on tests of some representative models. A Technical Construction File (TCF) was checked and approved by a competent body.

3.4.1 Installation

To install the Soft-Starter(s) in conformity with the EN60947-4-2 standard, it is necessary to attend the following requirements:

1) The cables used for control (inputs and outputs) and signal wiring must be armored or installed in metallic electroducts (conduits) or in metallic channels with equivalent attenuation.
2) It is important to follow the recommendations for earthing presented in this manual.
3) Models 10A to 1400A SSW-06 Soft-Starters are classified for use in "Class A", individual use with no need of external filters or armored power cables.

Description of the conducted emission classes according to Standard EN60947-4-2 (2000) + A1 (2002):
- Class B: residential environment (*first environment*), unrestricted distribution.
- Class A: industrial environment (*second environment*), unrestricted distribution.

NOTE!
The declaration of conformity CE is available on the website www.weg.net or on the CD, which comes with the products.

KEYPAD OPERATION

This Chapter describes the operation of the standard Keypad of the Soft-Starter SSW-06, providing the following information:

- ☑ General Keypad Description;
- ☑ Use of the Keypad;
- ☑ Soft-Starter SSW-06 Parameter organization;
- ☑ Parameter programming;
- ☑ Description of the Status Indicators.

4.1 DESCRIPTION OF THE KEYPAD (HMI-SSW06)

The standard Soft-Starter SSW-06 Keypad has two readout displays: a LED readout with a 4 digit, seven-segment display and a LCD display with two lines of 16 alphanumeric characters. There are also 4 indicator LED's and 8 keys. Figure 4.1 shows the front view of the Keypad and indicates the position of the readouts, keys and status LED's.

Functions of the LED Display:
Shows error messages and status (see Parameter, Error and Status Message Quick Reference), the parameter number or its content. The unit display (to the right) indicates the unit of the indicated variable.

- ☑ A → current
- ☑ U → voltage
- ☑ H → frequency
- ☑ Blank → other parameters

NOTE!
When the indication is equal or higher than 1000 (A or U), the variable unit will not be indicated (ex.: 568.A, 999.A, 1000.,1023., etc.)

NOTE!
When the indication is higher than 9999 (in A, for instance), the number corresponding to ten thousand will not be displayed (Ex.: 12345 A will be read as 2345 A).The correct indication will be displayed only on the LCD display.

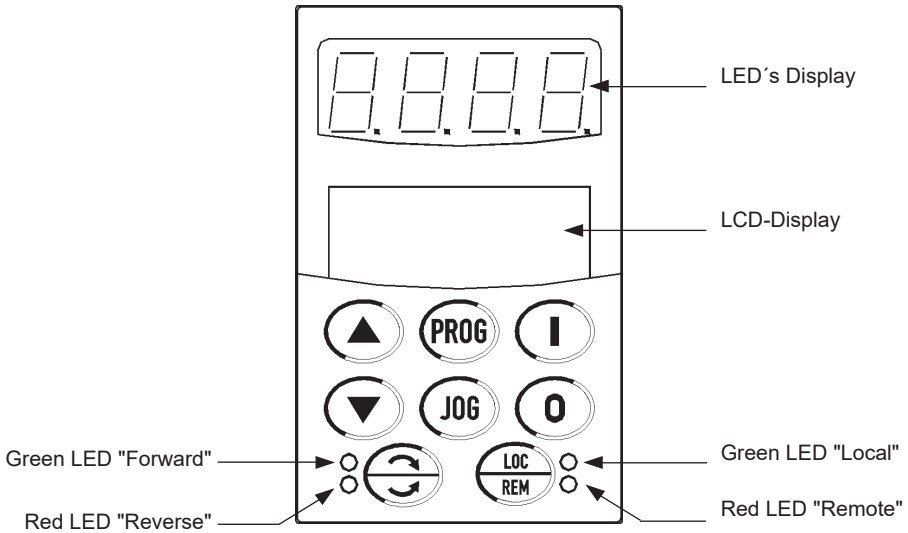

Figure 4.1 *- SSW-06 keypad*

Functions of the LCD Display:
The LCD Display shows the parameter number and its value simultaneously, without the need of pressing the PROG key. It also provides a brief description of each parameter and also the units (A, Hz, V, s, %, etc.) when necessary. It also provides a brief description of the fault code and inverter status.

Local and Remote Led Functions:

Soft-Starter in Local Mode:
Green Led On and Red Led Off.

Soft-Starter in Remote Mode:
Green Led Off and Red Led On.

Direction of Rotation (FWD/REV) LED Functions:
Not implemented in this Software Version

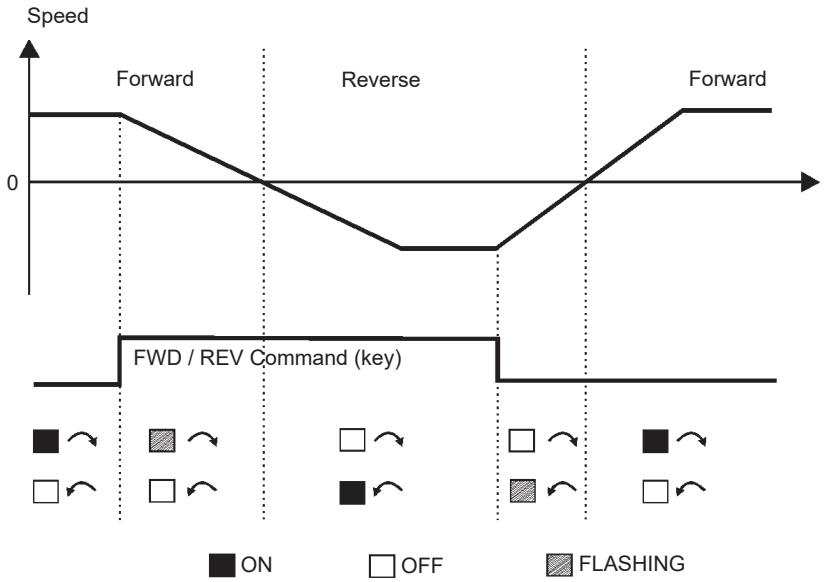

Figure 4.2 *- Direction of Rotation (FWD / REV) LED´s*

Operation of the keypad:

Starts (Enable) the motor (start).
After starting, at each touch it commutates the fast access indication (refer to item 4.2.2) on the display, as indicated below:

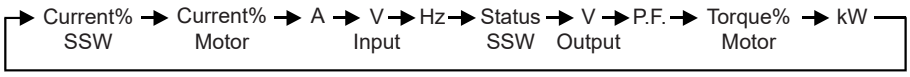

Stops (Disables) the motor (stop).
Also resets the Soft-Starter after a fault has occurred.

Toggles the LED display between the parameter number and its value (position/content).

Increases the number of the parameter or the value of the parameter.

Decreases the number of the parameter or the value of the parameter.

Reverses the direction of motor rotation between Forward/Reverse.

Toggles between LOCAL or REMOTE modes of operation.

Performs the JOG function when pressed. Any DIx programmed for General Enable must be closed (and the SSW-06 must be stopped) to enable JOG function.

4.2 USE OF THE KEYPAD

The keypad is used for programming and operating the Soft-Starter allowing the following functions:

- ☑ Indication of the Soft-Starter SSW-06 status and main operation variables;
- ☑ Fault indications;
- ☑ Viewing and programming of the setable parameters;
- ☑ Soft-Starter SSW-06 operation (via keys I, 0 and LOC/REM).

4.2.1 Keypad use for Soft-Starter SSW-06 Operation

Al the functions related to the SSW-06 Soft-Starter operation (Start, Stop, Increment, Decrement, FWD/REV, JOG, Local/Remote situation commutation) can be performed through the keypad. All keypad are enabled when the Local Mode has been selected. All these functions can be executed individually through digital inputs. For this, all parameters related to these functions and to the corresponding inputs must be programmed.

Operation of the keypad:

When programmed (P220 = 2 or 3), it selects the command source, changing between "Local" and “Remote”.
When programmed (P229 = 0 (key I, 0 → “ Local” condition) and/or P230 = 0 (key I, 0 → “Remote” condition)).

Starts the motor via Acceleration Ramp. (motor accelerates according to acceleration ramp and load characteristics).

Stops the motor via Deceleration Ramp. (motor decelerates according to deceleration ramp and stops).
It resets the Soft-Starter after a fault trip (always active).

Reverses the motor direction of rotation.
Enabled when P220 = 2 (Keypad LOC), P229 = 0 (HMI Key), Local Mode, P231 = 1 (By Contactor) or P231 = 2 (JOG Only).
Enabled when P220 = 3 (Keypad REM), P230 = 0 (HMI Key), Remote Mode, P231 = 1 (By Contactor) or P231 = 2 (JOG Only).

When P231 = 1 (By Contactor), changes the motor direction of rotation via contactor, if the contactors are connected at the input power supply and P277 = 4 (FWD/REV-K1) and P278 = 4 (FWD/REV-K2).
When P231 = 2 (JOG Only), changes the motor direction of rotation only by the Jog function. Contactors are not required.

Enabled when P510 = 1 (Active).
When the Jog key is pressed, it accelerates the motor to the Jog frequency conforming to the motor direction of rotation. When the Jog key is released, the motor decelerates and stops.

The motor must be disabled and the Soft-Starter SSW-06 must have a General Enable.

4.2.2 Keypad Display - Signalling Indications

Parameters P001 to P099 are Read Only Parameters. The first parameter to be displayed when the Soft-Starter is powered-up, can be programmed at P205.
The user is able to visualize some Read Only Parameters by pressing the key.

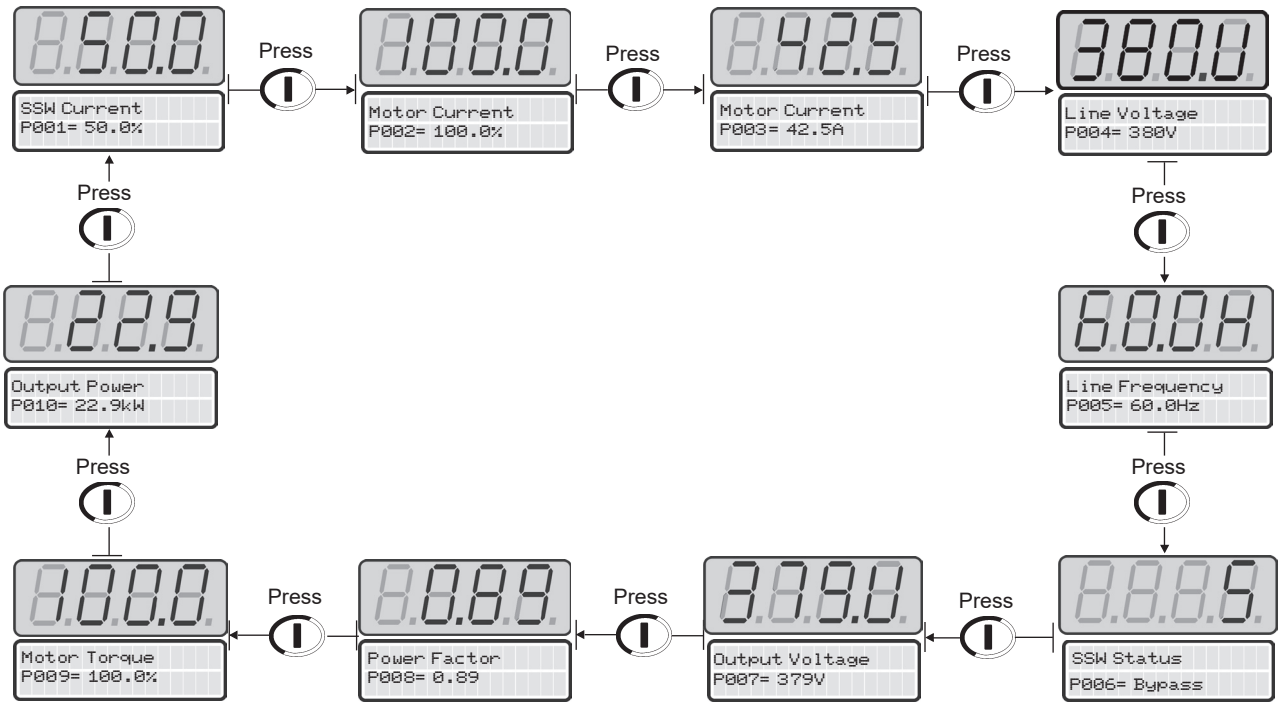

P205	Parameter to be displayed first
0	P001 (Soft-Starter current %In of the Soft-Starter)
1	P002 (Motor current %In of the Motor)
2	P003 (Motor current)
3	P004 (Line voltage)
4	P005 (Line Frequency)
5	P006 (Soft-Starter Status)
6	P007 (Output Voltage)
7	P008 (Power Factor)
8	P009 (Motor Torque % Tn of the Motor)
9	P010 (Output Power)

Table 4.1 *- Parameter initially shown on the displays*

Soft-Starter Status:

Soft-Starter is "ready" to be enabled

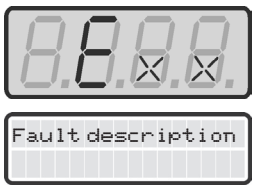

Soft-Starter with fault

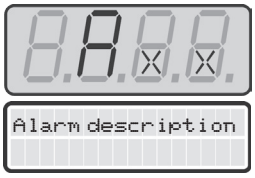

Soft-Starter with Alarm

Note: These states are showed automatically on the display; the others are in the parameter P006. Refer to the chapter 6.

7 Segment Display is flashing
The display flashes in the following conditions:
☑ Trying to change a parameter value when it is not allowed;
☑ Soft-Starter in Fault condition (see table 8.1).

4.2.3 Parameter viewing and programming

All Soft-Starter settings are made through the parameters. The parameters are shown on the display with the letter **P** followed by a number: Example (P101):

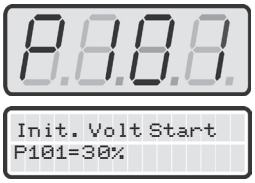

101= Parameter Number

Each parameter is associated with a numerical value (parameter content), that corresponds to an option selected among the options available for this parameter.

The values of the parameters define the Soft-Starter programming or the value of a variable (e.g. current, frequency, voltage). For Soft-Starter programming you should change the parameter(s) content(s).

ACTION	LED DISPLAY LCD DISPLAY	DESCRIPTION
Press the key PROG	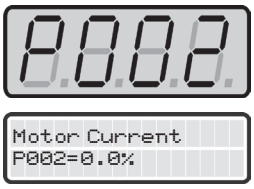	
Use the keys ▲ and ▼	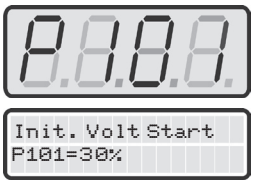	Select the desired parameter

ACTION	LED DISPLAY LCD DISPLAY	DESCRIPTION
Press the key PROG	30 Init. Volt Start P101=30%	Numeric value associated with the parameter [4]
Use the keys ▲ and ▼	35 Init. Volt Start P101=35%	Sets the new desired value. [1] [4]
Press the key PROG	P101 Init. Volt Start P101=35%	[1] [2] [3]

(1) For parameters that can be changed with the motor running, the Soft-Starter will use the new value immediately after it has been set. For the parameters that can be changed only with the motor stopped, the Soft-Starter will use this new set value only after the key PROG is pressed.

(2) By pressing the key PROG after the reprogramming, the new programmed value will be saved automatically and will remain stored until a new value is programmed.

(3) If the last value programmed in the parameter is not functionally compatible with other parameter values already programmed, an E24 - Programming Error - will be displayed. Example of programming error:
Programming two digital inputs (DIx) with the same function. Refer to table 4.2 for the list of programming errors that will generate an E24 Programming Error.

(4) To allow the reprogramming of any parameter value it is necessary to change parameter P000 to the password value. The factory default password value is 5. Otherwise you can only read the parameter values and not reprogram them.
For more details see P000 description in Chapter 6.

E24 - Programming Error
Two or more parameters between P266, P267, P268 equal to 1 (FWD/REV)
Two or more parameters between P266, P267, P268 equal to 2 (LOC/REM)
(P202 = 2 and P520 = 1) if there is pump control with kick start
(P202 = 3 and P520 = 1) if there is torque control with kick start
(P150 = 1 and P500 = 3) if there is DC-Braking with Inside Delta
(P643 > P642) The reset value for the motor thermal protection alarm is higher then the alarm setting
(P950=1 and P089=0) The SoftPLC is enabled without a CCS6 that supports it
(P263=1 and P264=1 or P265=5) if there is Start/Stop for DI1 and Stop 3 Wires for DI2 or DI3
(P263=1 and P264=4 or P265=4) if there is Start/Stop for DI1 and Start 3 Wires for DI2 or DI3
(P263=1 and P264=3 or P265=3) if there are more than one DI programmable to Start/Stop
(P263=2 and P264=4 or P265=4) if there are more than one DI programmable to Start 3 Wires
(P263=3 and P264=1 or P265=5) if there are more than one DI programmable to Stop 3 Wires
(P309≠0 and P951=1) if there is Fieldbus Communication Board with IOs Expansion Board
(P265=6 and P231≠0) if there is Emergency Start with FWD/REV
(P265=6 and P500≠0) if there is Emergency Start with any braking method
(P265=6 and P510=1) if there is Emergency Start with JOG function
(P309≠0 and P670≠0) if there is Fieldbus Communication Board with PT100 Inputs Board
(P951≠0 and P670≠0) if there is IOs Expansion Board with PT100 Inputs Board
(P674 > P673) the reset value for the PT100 thermal protection alarm is higher than the alarm setting Ch1
(P678 > P677) the reset value for the PT100 thermal protection alarm is higher than the alarm setting Ch2
(P682 > P681) the reset value for the PT100 thermal protection alarm is higher than the alarm setting Ch3
(P686 > P685) the reset value for the PT100 thermal protection alarm is higher than the alarm setting Ch4
(P690 > P689) the reset value for the PT100 thermal protection alarm is higher than the alarm setting Ch5

Table 4.2 - *Incompatibility between Parameters - E24*

START-UP

This Chapter provides the following information:

☑ How to check and prepare the Soft-Starter SSW-06 before power-up;
☑ How to power-up and check for proper operation;
☑ How to operate the Soft-Starter SSW-06 (See Electrical Installation).

5.1 POWER-UP PREPARATION

The Soft-Starter SSW-06 shall be installed according to Chapter 3 - Installation and Connection. If the drive project is different from the typical recommended drives, the steps below may also be followed.

DANGER!
Disconnect the AC input power before making any connections.

1) **Check all connections:**
Check if the power, grounding and control connections are correct and well tightened.

2) **Clean the inside of the Soft-Starter SSW-06:**
Remove all shipping material from the inside of the Soft-Starter SSW-06 or cabinet.

3) **Check the correct voltage selection:**
In models 255A to 820A, the fan supply voltage selection is correct. In models 950A to 1400A the single-phase supply voltage must be checked to make sure it is adequate for the voltage of the fans.

4) **Check the motor:**
Check all motor connections and verify if their voltages, currents and frequencies match the Soft-Starter SSW-06 specifications.

5) **Check the Soft-Starter SSW-06 motor connection type:**
Check if the standard three-wire connection should be used or if the Soft-Starter SSW-06 should be connected via inside delta of the motor. For more details, refer to Chapter 3.

6) **Uncouple the load from the motor:**
If the motor cannot be uncoupled, make sure that the direction of rotation (FWD/REV) cannot cause damage to the machine.

7) **Close the Soft-Starter SSW-06 and/or cabinet cover.**

5.2 INITIAL POWER-UP (required parameter settings)

After the Soft-Starter SSW-06 has been checked, AC power can be applied:

1) Check the supply voltage:
Measure the line voltage and check if it is within the specified range (Nominal Voltage -15% to +10%).

2) Power-up the Electronics Supply.

NOTE!
Always energize the electronics supply before energizing the power and execute all adjustments/settings described in this item.

3) Check if the power-up has been successful
When the Soft-Starter SSW-06 is powered up for the first time or when the factory default parameter values are loaded (P204 = 5), a start-up routine is run.
This routine requests the user to program some basic parameters to ensure proper Soft-Starter SSW-06 operation and motor operation. This routine sequence changes according to the selected type of control. For more details about the control type to be selected, refer to Parameter P202 in Chapter 6.
The parameterization sequence for each control type is show in figure 5.1.

ATTENTION!
For correct programming of the protection parameters, please consider the catalog data and the motor nameplate data of the used motor.

To protect the motor against overloads during the start process and during operation, program the thermal class of the motor. For more details about programming of the Thermal Class, see description of Parameter P640 in Chapter 6.

In this parameter setting sequence only the main parameters for learning about the Soft-Starter SSW-06 operation are shown. Please program all necessary parameters for correct operation of the Soft-Starter and motor protection, before operating it at nominal operation conditions.

4) Close the input circuit-breaker.

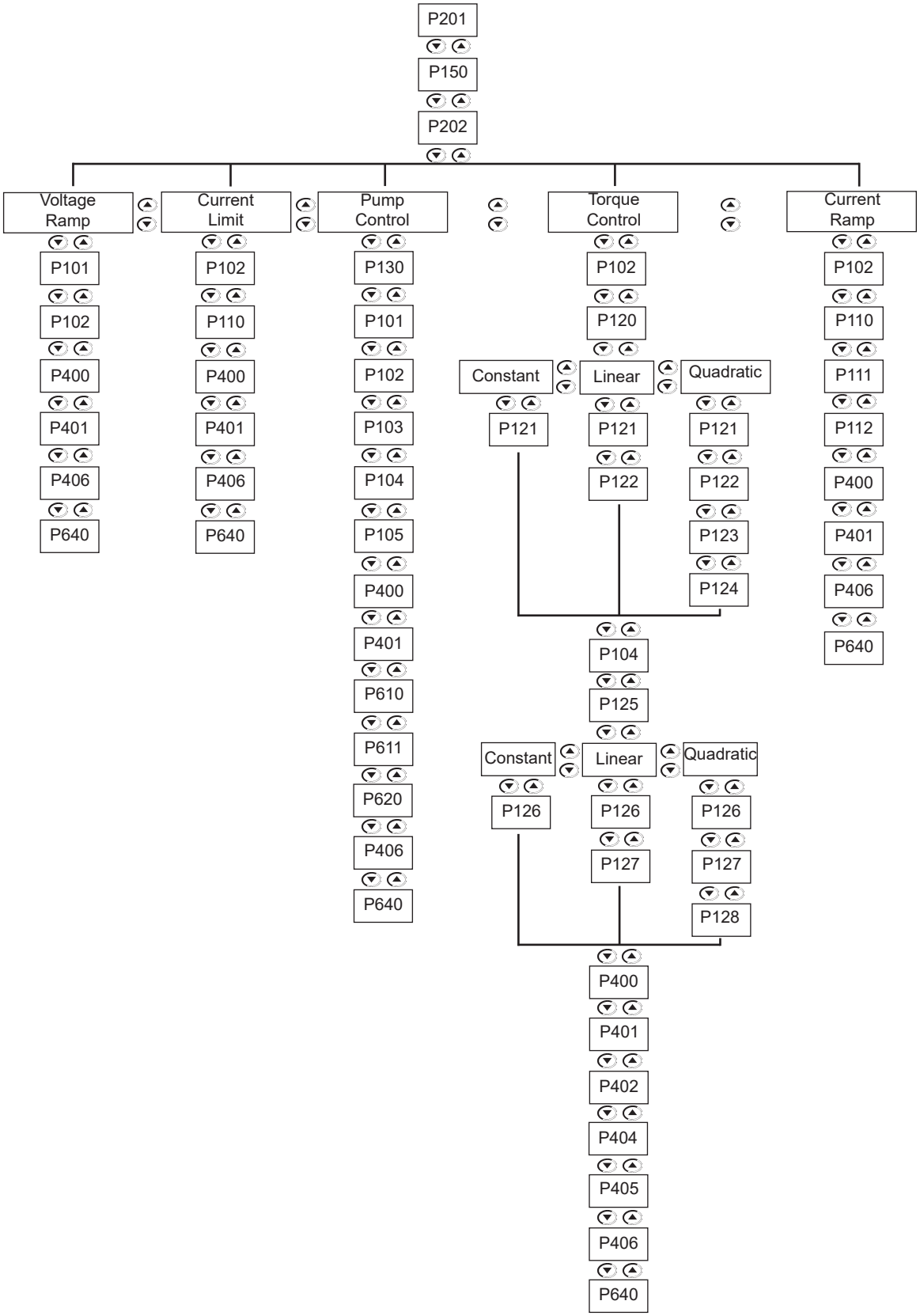

Figure 5.1 *- Parameter sequence during initial power-up*

Shown below is a parameter programming example requested by this routine.

Example:
Soft-Starter SSW-06
SSW060130T2257PSZ
Motor
High Efficiency Plus Three-Phase Electric Motor- 4 Poles - 60Hz
Power: 75 HP
Frame size: 225S/M
Speed: 1770 rpm
Nominal current at 380V: 101 A
Service Factor: 1.15
Start mode
Start-up by voltage ramp.

ACTION	LED DISPLAY LCD DISPLAY	DESCRIPTION
After Power-up, the Display shows the following message	P.201. Language P201=Portugues	Language Selection: 0=Português 1=English 2=Español 3=Deutsch
Press the key PROG to enter the programming mode	0. Language P201=Portugues	Enter the programming mode.
Use the keys ▲ and ▼ to select the language	1. Language P201=English	Selected language: English
Press the key PROG to save the selected option and exit the programming mode	P.201. Language P201=English	Exit the programming mode.
Press the key ▲ to go to the next parameter	P.150. Delta Inside P150=Inactive	Soft-Starter Connection Type to the motor: 0=Inactive = standard 3 wires 1=Active = Delta inside 6 wires
Press the key PROG to enter the programming mode	0. Delta Inside P150=Inactive	Enter the programming mode

ACTION	LED DISPLAY LCD DISPLAY	DESCRIPTION
Use the keys ▲ and ▼ for programming Soft-Starter connection type to motor	0.0.0.0. Delta Inside P150=Inactive	Soft-Starter connection type to motor: standard 3 wires (Maintain the existing value)
Press the key PROG to save the selected option and exit the programming mode	0.1.5.0. Delta Inside P150=Inactive	Exit the programming mode
Press the key ▲ to go to the next parameter	P.2.0.2. Type of Control P202=Volt.Ramp.	Selection of the start control type: 0=Voltage ramp 1=Current Limit 2=Pump Control 3=Torque Control 4=Current Ramp
Press the Key PROG to enter the programming mode	0.0.0.0. Type of Control P202=Volt.Ramp.	Enter the programming mode.
Use the keys ▲ and ▼ to select the start control type	0.0.0.0. Type of Control P202=Volt.Ramp.	Selected start control type: Voltage ramp (Maintain the existing value)
Press the key PROG to save the selected option and exit the programming mode	P.2.0.2. Type of Control P202=Volt.Ramp.	Exit the programming mode
Press the key ▲ to go to the next parameter	P.1.0.1. Init.VoltStartP101=30%	Initial start voltage by voltage ramp: (25 to 90)%Un
Press the key PROG to enter programming mode	0.0.3.0. Init. Volt Start P101=30%	Enter the programming mode.

ACTION	LED DISPLAY LCD DISPLAY	DESCRIPTION
Use the keys ▲ and ▼ to select the initial start voltage	35 Init. Volt Start P101=35%	Initial selected voltage: 35% Un (according to load requirements)
Press the key PROG to save the selected option and exit the programming mode	P101 Init. Volt Start P101=35%	Exit the programming mode
Press the key ▲ to go to the next parameter	P102 Start Time Ramp P102=20s	Voltage Ramp Time: (1 to 999)s
Press the key PROG to enter the programming mode	20 Start Time Ramp P102=20s	Enter the programming mode.
Use the keys ▲ and ▼ to select the ramp time for the start voltage	15 Start Time Ramp P102=15s	Selected ramp time for the start voltage: 15s (according to load requirements)
Press the key PROG to save the selected option and exit the programming mode	P102 Start Time Ramp P102=15s	Exit the programming mode
Press the key ▲ to go to the next parameter	P400 Nominal Motor Volt P400=380V	Nominal motor voltage (Un): (0 to 999)V
Press the key PROG to enter the programming mode	380 Nominal Motor Volt P400=380V	Enter the programming mode.
Use the keys ▲ and ▼ to select the nominal motor voltage	380 Nominal Motor Volt P400=380V	Selected nominal motor voltage: 380V (according to the motor data)

ACTION	LED DISPLAY LCD DISPLAY	DESCRIPTION
Press the key PROG to save the selected option and exit the programming mode	P400 Nominal Motor Volt P400=380V	Exit the programming mode
Press the key ▲ to go to the next parameter	P401 Nominal Motor Cur. P401=20.0A	Nominal motor current (In): (0 to 1500)A
Press the Key PROG to enter the programming mode	20.0A Nominal Motor Cur. P401=20.0A	Enter the programming mode.
Use the keys ▲ and ▼ to select the nominal motor current	101A Nominal Motor Cur. P401=101.0A	Selected nominal motor current: 101A (according to the motor data)
Press the key PROG to save the selected option and exit the programming mode	P401 Nominal Motor Cur. P401=101.0A	Exit programming mode
Press the key ▲ to go to the next parameter	P406 Service Factor P406=1.00	Motor Service Factor (S.F.): 0.00 to 1.50
Press the Key PROG to enter the programming mode	1.00 Service Factor P406=1.00	Enter the programming mode.
Use the keys ▲ and ▼ to select the motor Service Factor	1.15 Service Factor P406=1.15	Selected motor Service factor: 1.15 (according to the motor data)
Press the key PROG to save the selected option and exit the programming mode	P406 Service Factor P406=1.15	Exit programming mode

ACTION	LED DISPLAY LCD DISPLAY	DESCRIPTION
Press the key ▲ to go to the next parameter	P640 Ther.Prot.Class P640=Class 30	Thermal motor Protection Class: 0= Inactive 1= Class 5 2= Class 10 3= Class 15 4= Class 20 5= Class 25 6= Class 30 7= Class 35 8= Class 40 9= Class 45
Press the key PROG to enter the programming mode	6 Ther.Prot.Class P640=Class 30	Enter the programming mode.
Use the keys ▲ and ▼ to select the thermal motor protection class	6 Ther.Prot.Class P640=Class 30	Thermal motor protection class: 6= Class 30 (According to the motor data)
Press the key PROG to save the selected option and exit the programming mode	P640 Ther.Prot.Class P640=Class 30	Exit the programming mode
Press the key ▲ to go to the next parameter		Soft-Starter is reset
	rdy Soft Starter ready	Soft-Starter is ready for operation

Open the input circuit-breaker to disconnect the Soft-Starter SSW-06.

NOTE!
Repeat the first power-up process:
If you want to repeat the first power-up routine, set parameter P204 = 5 (it loads the factory standard default parameters), then follow the first power-up routine;
The first power-up routine, as described above, automatically sets some parameters. For more details, refer to Chapter 6.

5.3 START-UP

This Section describes the start-up procedure when operating via the Keypad. Five types of control will be considered:

Start-up by Voltage Ramp:
The start by voltage ramp is the most used method and its programming and parameter setting is very easy to do. The Soft-Starter SSW-06 applies the voltage to the motor without any feedback of the voltage or current applied to the motor.

Start-up by Current Limit:
The maximum programmed current level is maintained during start-up and it is set according to the application requirements. This programming is very easy.

Start-up by Current Ramp:
The maximum current level is also limited during the start-up, however higher or lower start-up current limits can be set.

Start-up by Pump Control:
Optimized control method, providing the required torque to start/stop hydraulic centrifugal pumps smoothly.

Start-up by Torque Control:
The Soft-Starter SSW-06 is fitted with a torque control algorithm of high performance and is totally flexible to meet any application requirement during the motor start or stop and its coupled load.
The method allows a torque control with 1 setting point, a torque control with 2 setting points and a torque control with 3 setting points.

NOTE!
Every time the content of the Parameter P202 is changed, the Soft-Starter will execute a setting sequence routine according to the selected control type.
For more details, refer to Parameter P202 in Chapter 6 and 7.

The following sequence is valid for Drive 1 (see item 3.3.1). The SSW-06 Soft-Starter must already be installed and the electronics, fans and power must already be energized, according to chapter 3, with the setting sequence of the initial Start-up complete, as described in the Item 5.2.

5.3.1 Start-up: Operation via Keypad Type of control: Voltage Ramp

ACTION	LED DISPLAY LCD DISPLAY	DESCRIPTION
Power-up the Soft-Starter	rdy Soft Starter ready	Soft-Starter is ready to be operated
Press the key PROG. Press the key ▼ to find P000. Also the key ▲ may be used to find Parameter P000	P000 Parameter Access P000=0	It enables the access for changing parameters. With setting according to Factory Default [P200 = 1 (Password is active)], you must set P000 = 5 for changing the parameter content.

ACTION	LED DISPLAY LCD DISPLAY	DESCRIPTION
Press the key PROG to enter the programming mode	0000 Parameter Access P000=0	Enter the Programming Mode
Use the Keys ▲ and ▼ to program the Password value	0005 Parameter Access P000=5	Password value (Factory Default)
Press the key PROG to save the selected option and exit the programming mode	P000 Parameter Access P000=5	Exit the programming mode
Press the key ▲ to find P202. Also the key ▼ may be used to find Parameter P202	P202 Type of Control P202=Volt. Ramp.	This Parameter defines the Type of Control 0=Voltage Ramp 1=Current Limit 2=Pump Control 3=Torque Control 4=Current Ramp
Press the Key PROG to enter the programming mode	0000 Type of Control P202=Volt. Ramp.	Enter the Programming Mode
Use the keys ▲ and ▼ to select the correct value of the Control Type	0000 Type of Control P202=Volt. Ramp.	Type of Control selected for the Start-up: Voltage Ramp (maintain the existing value)
Press the key PROG to save the selected option and exit the programming mode	P202 Type of Control P202=Volt. Ramp.	Exit the programming mode
Press the key ▼ and maintain it depressed to find P003	P003 Motor Current P003=0A	Motor Current (A)

ACTION	LED DISPLAY LCD DISPLAY	DESCRIPTION
Press the key PROG	0 Motor Current P003=0A	This is only a Read Parameter
Press the key I	346A Motor Current P003=346A	Motor accelerates and a high value of current is reached.
	90A Motor Current P003=90A	Then the current decreases down to a value required by the load.
Press the key 0	rdy SoftStarter ready	Motor decelerates until stopping by coast to rest. Time to stop depends on load inertia and friction.
Press the key I	346A Motor Current P003=346A	Motor accelerates and a high value of current is reached.
	90A Motor Current P003=90A	Then the current decreases up to a value required by the load.
Press the key LOC REM	rdy SoftStarter ready	Soft-Starter is now controlled via terminals (REMOTE). Motor decelerates till stopping by the load inertia.
Press the key LOC REM again	rdy SoftStarter ready	Soft-Starter is controlled again via keypad (LOCAL). Motor remains stopped.

NOTES!
Setting hints and suggestions for all types of controls and their uses can be found in Chapter 7.
For start-up through voltage ramp refer to Item 7.1.1.

DETAILED PARAMETER DESCRIPTION

This Chapter describes in detail all Soft-Starter SSW-06 parameters. In order to simplify the explanation, the parameters have been grouped by characteristics and functions:

Read Only Parameters	Variables that can only be viewed on the display but not changed by the user.
Regulation Parameters	Programmable values used by the Soft-Starter SSW-06 functions.
Configuration Parameters	These Parameters define the Soft-Starter SSW-06 characteristics, the functions to be executed, as well as the input/output functions of the control board.
Motor Parameters	Motor data that are indicated on the motor nameplate.
Special Function Parameters	Here are the parameters related to special functions.
Protection Parameters	Here are the parameters related to actuation levels and actuation time of the motor protection.

Symbols and definitions used in the text below:

(1) Indicates that the parameter can only be changed when the Soft-Starter SSW-06 is disabled (motor stopped).
(2) Parameters not changed when programmed to Factory Default (P204=5).

6.1 ACCESS AND READ ONLY PARAMETERS - P000 to P099

Parameter	Range [Factory Setting] Unit	Description / Notes
P000 Parameter Access Password Value Setting	0 to 999 [0] -	☑ This parameter opens the access to change the parameter values. When values are set according to Factory Default [P200 = 1 (Password is active)] set P000 = 5 to change parameter values, and the Password value is equal to 5. ☑ By programming P000 with the password that releases access to change parameter contents, plus 1 (Password + 1), you will obtain access only to the parameters with contents different from the factory setting. ☑ To change the password to any other value (password 1), proceed as follows: **(1)** Set P000=5 (current password) and P200= 0 (password inactive). **(2)** Press the key PROG . **(3)** Change P200 to 1 (password active). **(4)** Press the key PROG again: display shows P000. **(5)** Press the key PROG again: display shows 5 (last password). **(6)** Use the keys ▲ and ▼ to change to the desired password value (password 1). **(7)** Press the key PROG : display shows P000. From this moment on, the new password becomes active. Thus, to change parameter content P000 must be set to the new password. (Password 1).

Parameter	Range [Factory Setting] Unit	Description / Notes
P001 Soft- Starter SSW-06 Current	0 to 999.9 [-] 0.1%	☑ Indicates Soft-Starter SSW-06 output current as percentage of the nominal current of the Soft-Starter (%In of the SSW-06) . ☑ Precision of ± 2% for the full scale. (The full scale is 5 x In of the SSW-06). **NOTE!** When the motor connection is inside delta (P150=1), the indication of the current value will already be multiplied by 1.73.
P002 Motor Current	0 to 999.9 [-] 0.1%	☑ Indicates Soft-Starter SSW-06 Output Current as percentage of the nominal motor current (%In of the motor). ☑ Precision of ± 2% for the full scale. (The full scale is 5 x In of the SSW-06). **NOTE!** When the motor connection is inside delta (P150=1), the indication of the current value will already be multiplied by 1.73.
P003 Motor Current	0 to 9999.9 [-] 0.1A	☑ Indicates the Soft-Starter SSW-06 output current in Amperes (A). ☑ Precision of ± 2% for the full scale. (The full scale is 5 x In of the SSW-06). **NOTE!** When the motor connection is inside delta (P150=1), the indication of the current value will already be multiplied by 1.73.
P004 Line Voltage	0 to 999 [-] 1V	☑ Indicates the average True rms voltage of the three input phases in Volts (V). ☑ Accuracy: ± 2V. **NOTE!** The voltage will only be indicated when it reaches a value greater than 15V. Below this value, only 0 (zero) will be indicated.
P005 Line Frequency	0 to 99.9 [-] 0.1Hz	☑ Indicates the line frequency in Hertz (Hz). ☑ Precision of ± 5% of the nominal frequency of the supply network. **NOTE!** Only indicates network frequency when there is a voltage greater than 20V rms in the power supply (R/ 1L1, S/ 3L2 and T/5L3).

Parameter	Range [Factory Setting] Unit	Description / Notes
P006 Soft-Starter SSW-06 Status	0 to 12 [-] 1	☑ Indicates the actual Soft-Starter SSW-06 status:

P006	Description of the Soft-Starter status
0	Ready to start the motor
1	Performing the initial test of the line and of the motor
2	With a fault
3	During acceleration ramp
4	At full voltage
5	With the By-pass contactor activated
6	Reserved
7	During deceleration ramp
8	Performing braking
9	Performing reversion of the speed direction
10	During Jog
11	During the P630 time delay
12	With the General Enable deactivated

Table 6.1 *- Soft-Starter status*

P007 Soft-Starter SSW-06 Output Voltage	0 to 999 [-] 1V	☑ Indicates the average True rms voltage of the three output phases of the Soft-Starter SSW-06 in Volts (V). ☑ Accuracy: ± 2V. **NOTE!** The voltage will only be indicated when it reaches a value greater than 15V. Below this value, only 0 (zero) will be indicated.
P008 Power Factor	0 to 1.00 [-] -	☑ Indicates motor power factor. ☑ Accuracy: ± 5%. **NOTE!** The motor power factor will only be indicated when the current is greater than 20% of the nominal current of the SSW-06. 0 (Zero) will be indicated if the current is below 20% of the SSW-06 nominal current.
P009 Motor Torque	0 to 999.9 [-] 0,1%	☑ Indicates the motor torque in percent of the nominal motor torque (% Tn of the Motor). ☑ The Soft-Starter SSW-06 is fitted with a software for estimating the motor torque by using the same principles contained in WEG Frequency Inverters. ☑ This high technology software enables indicating the motor torque very close to the effective present torque. ☑ Accuracy of ± 10% Tn of the Motor. **ATTENTION!** Information related to the nominal torque of the motor and maximum starting torque of the motor can be found in the manufacturer's catalogue. **NOTE!** For the correct torque to be indicated, in P009, all the parameters related to the motor, P400 to P406, must be correctly programmed according to the data informed on the motor nameplate.

Parameter	Range [Factory Setting] Unit	Description / Notes
P010 Output Power	0 to 6553.5 [-] 0.1kW	☑ Indicates the active power as average of the three output phases of the Soft-Starter SSW-06 in kilo Watts (kW). **NOTE!** The output power will only be indicated when the current is greater than 20% of the SSW-06 nominal current. 0 (Zero) will be indicated if the current is lower than 20% of the SSW-06 nominal current.
P011 Apparent Output Power	0 to 6553.5 [-] 0.1kVA	☑ Indicates the apparent power as average of the three output phases of the Soft-Starter SSW-06 in kilo Volt Amperes (kVA).
P012 DI1 to DI6 Status	LCD=1,0 LED=0 to 255 [-] -	☑ Indicates on the keypad LCD display the status of the 6 digital inputs of the control board (DI1... DI6). Number 1 stands for Active and Number 0 for Inactive, in the following order: DI1, DI2,..., DI5, DI6. ☑ The LED Display shows a decimal value corresponding to the status of the 6 digital inputs, where the status of each input is considered one bit in the specified sequence: Inactive=0 Active=1 DI1 status is the most significant bit. The 2 least significant bits are always ‘’0’’. Example: DI1 = Active (+24V); DI4 = Active (+24V); DI2 = Inactive (0V); DI5 = Inactive (0V); DI3 = Inactive (0V); DI6 = Inactive (0V). It is equivalent to the bit sequence: 10010000 Which corresponds to the decimal number 144. The least significant bits are not displayed. The keypad displays will be as follows: 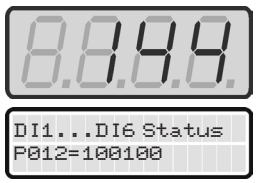

Parameter	Range [Factory Setting] Unit	Description / Notes
P013 RL1 to RL3 Status	LCD=1,0 LED=0 to 255 [-] -	☑ Indicates on the keypad LCD display the status of the 3 relay outputs of the control board. Number 1 stands for Active and 0 for Inactive, in the following order: RL1, RL2, RL3. ☑ The keypad LED display shows the decimal value that corresponds to the status of the 3 digital outputs, where the status of each output is considered one bit in the specified sequence: Inactive=0 Active=1 RL1 status is the most significant bit. The 5 least significant bits are always "0". Example: RL1=Active; RL2=Inactive; RL3=Active This is equivalent to the binary sequence: 10100000 Which corresponds to the decimal number 160. The least significant bits are not displayed. The Keypad displays will be: 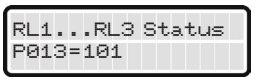
P014 Last Fault	0 to 99 [-] -	☑ Indicate the code of the last previous Faults. ☑ Fault Sequence: Exy → P014 → P015 → P016 → P017 → P018 → P019
P015 Second Previous Fault	0 to 99 [-] -	
P016 Third Previous Fault	0 to 99 [-] -	
P017 Fourth Previous Fault	0 to 99 [-] -	
P018 Fifth Previous Fault	0 to 99 [-] -	
P019 Sixth Previous Fault	0 to 99 [-] -	

Parameter	Range [Factory Setting] Unit	Description / Notes
P020 Current Fault	0 to 99 [-] -	☑ It indicates if any fault is active. **NOTE!** Erros related to communication (E28, E29 and E30) are not indicated in P020.
P021 Current Alarm	0 to 99 [-] -	☑ It indicates if any alarm is active.
P023 Software Version	X.XX [-] -	☑ Indicates the software version contained in the microcontroller memory of the control board.
P027 Analog Output AO1 Value	0 to 10.000 [-] 0.001V	☑ It indicates the analog output AO1 value directly in “mV”.
P028 Analog Output AO2 Value	0 to 20.000 or 4.000 to 20.000 [-] 0.001mA	☑ It indicates the analog output AO2 value directly in “mA”.
P030 Current of Phase R **P031** Current of Phase S **P032** Current of Phase T	0 to 9999.9 [-] 0.1A 0 to 9999.9 [-] 0.1A 0 to 9999.9 [-] 0.1A	☑ Accuracy: ± 2% for full scale (full scale is 5 x In of the SSW-06). **NOTE!** When the inside delta connection of the motor is used (P150=1), the indication of the current value will already be multiplied by 1.73.
P033 Line Voltage - R-S **P034** Line Voltage - S-T **P035** Line Voltage - T-R	0 to 999 [-] 1V 0 to 999 [-] 1V 0 to 999 [-] 1V	☑ Accuracy: ± 2V. **NOTE!** The voltage will only be indicated when it reaches a value greater than 15V. Below this value, only 0 (zero) will be indicated.

Parameter	Range [Factory Setting] Unit	Description / Notes
P042 Time Powered	0 to 65535 [-] 1h	☑ Indicates the total number of hours that the Soft-Starter was powered. ☑ This value remains stored even when the Soft-Starter is switched OFF. **NOTE!** The indication on the LED display was modified and is different from the previous software versions, following now the standard described in the item 4.1.
P043 Time Enabled	0 to 6553.5 [-] 0.1h	☑ Indicates the total number of hours that the Soft-Starter has run. ☑ This value remains stored even when the Soft-Starter is turned OFF. ☑ Indicates up to 6553,5 hours, rolls over to 0000. ☑ If P204 is set to 3, P043 is reset to zero.
P044 kWh Counter	0 to 999.9 [-] 1kWh	☑ Indicates the energy consumed by the motor, in kWh. ☑ Indicates up to 999.9kWh, then it return**s** to zero. ☑ If P204 is set to 3, P044 is reset to zero. ☑ This value remains stored even when the Soft-Starter is turned OFF.
P045 MWh Counter	0 to 9999 [-] 1MWh	☑ Indicates the energy consumed by the motor, in MWh. ☑ Indicates up to 9999MWh, then it returns to zero. ☑ If P204 is set to 3, P045 is reset to zero. ☑ This value remains stored even when the Soft-Starter is turned OFF.
P047 Maximum Starting Current	0 to 9999.9 [-] 0.1A	☑ It stores the value of the maximum current during the start. ☑ The value of P047 is reset at the beginning of each start. ☑ If P204 is set to 3, P047 is reset to zero. ☑ This value is not kept when the Soft-Starter is turned OFF. ☑ It does not record currents of the JOG function.
P048 Average Starting Current	0 to 9999.9 [-] 0.1A	☑ It stores the value of the average current during the start. ☑ The value of P048 is reset at the beginning of each start. ☑ P204 is set to 3, P048 is reset to zero. ☑ This value is not kept when the Soft-Starter is turned OFF. ☑ It does not record currents of the JOG function.
P049 Real Starting Time	0 to 999 [-] 1s	☑ It stores the real starting time. ☑ The real starting time is the time required for the motor to reach its nominal speed. ☑ The real starting time depends on the starting parameters settings and on the load conditions. The time set in P102, even for voltage ramp, is not the real starting time. A motor without load, for instance,

Parameter	Range [Factory Setting] Unit	Description / Notes
		can reach its nominal speed with low voltages. And the time adjusted in P102 is the time in which the Soft-Starter applies 100% of the line voltage to the motor. ☑ The value of P049 is reset at the beginning of each start. ☑ If P204 is set to 3, P049 is reset to zero. ☑ This value is not kept when the Soft-Starter is turned OFF.
P050 Motor Thermal Protection Status	0 to 250 [-] 1%	☑ Indication of the state of motor thermal protection on a scale of 0% to 250%. 250 being the thermal protection functioning point of the motor, indicating an error. ☑ The value indicated in this parameter depends on the motor working condition and how long it has been in this condition, for example: stopped, starting or in full operation. The value also depends on the selected thermal class, the nominal power and the service factor of the motor. ☑ A value of approximately 160 can be read if the motor is operating in full load for over 2 hours with a current equal to the nominal current times the service factor (In x S.F. @ 2h). ☑ If P204 is set to 3, P050 is reset to zero. ☑ This value remains stored even when the Soft-Starter is turned OFF.
P053 Maximum Current at Full Voltage	0 to 9999.9 [-] 0.1A	☑ It stores the value of the maximum current during the period the motor is working at full voltage or with the By-pass activated. ☑ If P204 is set to 4, P053 is reset to zero. ☑ This value remains stored even when the Soft-Starter is turned OFF.
P054 Maximum Line Voltage with the Motor Running	0 to 999 [-] 1V	☑ It stores the highest line voltage value with the motor in operation. ☑ If P204 is set to 4, P054 is reset to zero. ☑ This value remains stored even when the Soft-Starter is turned OFF.
P055 Minimum Line Voltage with the Motor Running	0 to 999 [-] 1V	☑ It stores the lowest line voltage value with the motor in operation. ☑ If P204 is set to 4, P055 is reset to zero. ☑ This value remains stored even when the Soft-Starter is turned OFF.
P056 Maximum Line Frequency with the Motor Running	0 to 99 [-] 1Hz	☑ It stores the highest line frequency value with the motor in operation. ☑ If P204 is set to 4, P056 is reset to zero. ☑ This value remains stored even when the Soft-Starter is turned OFF.

Parameter	Range [Factory Setting] Unit	Description / Notes
P057 Minimum Line Frequency with the Motor Running	0 to 99 [-] 1Hz	☑ It stores the lowest line frequency value with the motor in operation. ☑ If P204 is set to 4, P057 is reset to zero. ☑ This value remains stored even when the Soft-Starter is turned OFF.
P058 Maximum Number of Starts per Hour	0 to 32 [-] 1	☑ It stores the maximum number of starts per hour. ☑ It has the capacity of storing one start every 112.5 s, totalizing a maximum of 32 starts in one hour. If two or more starts occur during this time period of 112.5 s, only one is recorded. ☑ If P204 is set to 4, P058 is reset to zero. ☑ This value remains stored even when the Soft-Starter is turned OFF.
P059 Total Number of Starts	0 to 65535 [-] 1	☑ It stores the total number of starts executed by the Soft-Starter. ☑ In order to be considered a start, the motor must initiate the starting after the initial test, i.e., the line and motor connections must be correct. ☑ This value remains stored even when the Soft-Starter is turned OFF.
P060, P063, P066, P069, P072 and P075 Current at the Fault Trip **P061, P064, P067, P070, P073 and P076** Voltage at the Fault Trip **P062, P065, P068, P071, P074 and P077** SSW Status at the Fault Trip	0 to 9999.9 [-] 0.1A 0 to 999 [-] 0.1A 0 to 12 [-] 1	☑ P060, P063, P066, P069, P072 and P075 stores the motor current value at the moment of the fault trip, according to the table 6.2. ☑ P061, P064, P067, P070, P073 and P076 stores the motor voltage value at the moment of the fault trip, according to the table 6.2. ☑ P062, P065, P068, P071, P074 and P077 stores the Soft-Starter status at the moment of the fault trip, according to the table 6.2. The Soft-Starter status are described in the parameter P006. ☑ This value remains stored even when the Soft-Starter is turned OFF.

Sequence of Faults	Related Parameters	Parameter Descriptions
P014 (Last)	P060	Motor current at the last fault trip
	P061	Line voltage at the last fault trip
	P062	Soft-Starter status at the last fault trip
P015 (2nd)	P063	Motor current at the second fault trip
	P064	Line voltage at the second fault trip
	P065	Soft-Starter status at the second fault trip
P016 (3rd)	P066	Motor current at the third fault trip
	P067	Line voltage at the third fault trip
	P068	Soft-Starter status at the third fault trip
P017 (4th)	P069	Motor current at the fourth fault trip
	P070	Line voltage at the fourth fault trip
	P071	Soft-Starter status at the fourth fault trip
P018 (5th)	P072	Motor current at the fifth fault trip
	P073	Line voltage at the fifth fault trip
	P074	Soft-Starter status at the fifth fault trip
P019 (6th)	P075	Motor current at the sixth fault trip
	P076	Line voltage at the sixth fault trip
	P077	Soft-Starter status at the sixth fault trip

Table 6.2 *- Sequence of faults and their respective diagnostics*

Parameter	Range [Factory Setting] Unit	Description / Notes
P085 Fieldbus Communication Board Status	0 to 3 [-] -	<table><tr><th>P085</th><th>Description</th></tr><tr><td>0</td><td>Off</td></tr><tr><td>1</td><td>Board inactive</td></tr><tr><td>2</td><td>Board active and Offline</td></tr><tr><td>3</td><td>Board active and Online</td></tr></table>***Table 6.3*** *- Fieldbus communication board status* ☑ Indicates the status of the Fieldbus communication board. ☑ Standard is disabled when board is not inserted. ☑ For more details, refer to the Fieldbus Manual for the Soft-Starter SSW-06.
P088 SoftPLC Status	0 to 4 [-] 1	☑ It indicates the existence of any user PLC software stored. If there is any, it indicates its actual state. <table><tr><th>P088</th><th>Description</th></tr><tr><td>0</td><td>Without applicative software</td></tr><tr><td>1</td><td>Loading the applicative software</td></tr><tr><td>2</td><td>Fault in the applicative software</td></tr><tr><td>3</td><td>Stopped applicative software</td></tr><tr><td>4</td><td>Running the applicative software</td></tr></table>***Table 6.4*** *- Status of the applicative software*
P089 Allows SoftPLC	0 to 1 [-] 1	☑ The SSW-06 Soft-Starter allows the implementation of programmable logic controller software in ladder language, the SoftPLC, with an applicative program capacity of 1 Kbyte. ☑ With the SoftPLC, interlocking logics between digital inputs and outputs, analog outputs, motor starting logics, among others, can be created. ☑ This SoftPLC is programmable through the WLP software, according to the WLP manual. <table><tr><th>P089</th><th>Description</th></tr><tr><td>0</td><td>It does not allow applicative software</td></tr><tr><td>1</td><td>It allows applicative software</td></tr></table>***Table 6.5*** *- Indication of the SoftPLC use capacity* ☑ It indicates if the Soft-Starter control board has the memory capacity for using the SoftPLC. The older Soft-Starter control boards do not have this capacity. ☑ The Soft-Starter software versions are compatible with both boards, only the SoftPLC cannot be used with the older boards.
P091 Motor Temperature Ch1 **P092** Motor Temperature Ch2 **P093** Motor Temperature Ch3 **P094** Motor Temperature Ch4 **P095** Motor Temperature Ch5	0 to 250 [-] ºC	☑ Indicates the motor temperature in Celsius degrees. **NOTE!** For the indication of the temperatures of the motor the use of optional kit K-PT100 is necessary. For more details see chapter 9.

6.2 REGULATION PARAMETERS - P100 to P199

Parameter	Range [Factory Setting] Unit	Description / Notes
P101 Initial Voltage	25 to 90 [30] 1% Un of the Motor	☑ Used in the control by Voltage Ramp and Pump Controls, P202=0 or 2. ☑ Sets the initial value of the nominal voltage (%Un) that will be applied to the motor according to figure 6.1. ☑ For more details about the programming and use, see Voltage Ramp and Pump Control in P202. ☑ The initial voltage is 0.5s after the Soft-Starter SSW-06 receives the command to start the motor. This is the waiting time for the network isolation contactor to start the power supply. 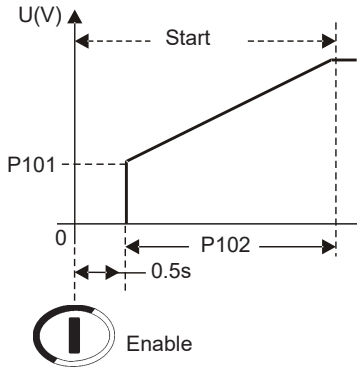 ***Figure 6.1 -*** *Initial time for motor start* **NOTE!** When another control type is selected, not the Voltage Ramp or Pump Control, the initial voltage will be attenuated due to the limit imposed by the control.
P102 Acceleration Ramp Time	1 to 999 [20] 1s	☑ When the Soft-Starter SSW-06 has been programmed to Voltage Ramp Control or Pump Control, this will be the ramp time of the voltage increment as shown in figure 6.2. 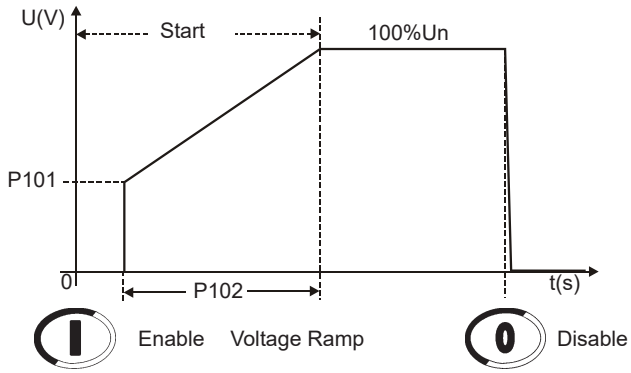 ***Figure 6.2*** *- Acceleration ramp by Voltage Ramp*

Parameter	Range [Factory Setting] Unit	Description / Notes
		☑ When the Soft-Starter SSW-06 has been programmed to Current Limit control, Torque Control or Current Ramp, this time acts as maximum starting time, as a protection against locked rotor. 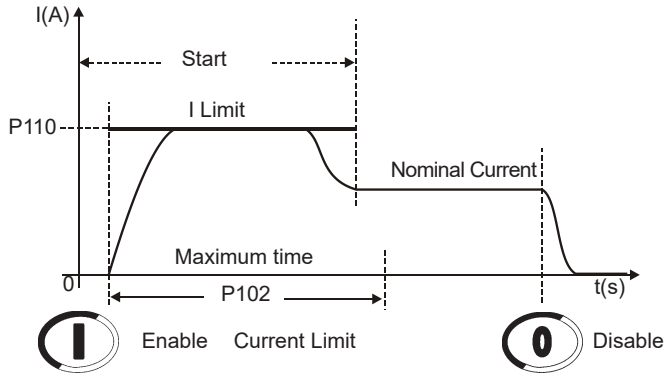 ***Figure 6.3*** *- Acceleration ramp by Current Limit* **NOTE!** The time set at P102 is not the exact motor acceleration time, but the voltage ramp time or the maximum start time. The motor acceleration time will depend on the motor and the load characteristics.
P103 Voltage Step During Deceleration Motor	99 to 60 [100=Inactive] 1% Un of the	☑ Used in applications with hydraulic pumps. ☑ Set the nominal voltage (%Un), which will be applied to the motor instantaneously when the Soft-Starter SSW-06 receives the ramp deceleration command. ☑ For more details about programming and use, refer to Pump Control at P202. **NOTE!** To enable this function, you must set a deceleration ramp time.
P104 Deceleration Ramp Time	0 to 299 [0=Inactive] 1s	☑ Used in hydraulic pump applications. ☑ Enables and sets the time of the voltage decrement ramp. ☑ For more details about programming and use, refer to Pump Control at P202. ☑ It can be used as Voltage Ramp control, Pump Control, Current Limit and Current Ramp. **NOTE!** This function is used to lengthen the normal deceleration time of a load and not to force a shorter time than that imposed by the load.

Parameter	Range [Factory Setting] Unit	Description / Notes
P105 End Deceleration Voltage	30 to 55 [30] 1% Un of the Motor	☑ Used in hydraulic pump applications. ☑ Sets the nominal voltage (%Un), which will be applied to the motor at the end of the deceleration ramp. ☑ For more details about the programming and use, refer to Pump Control at P202. 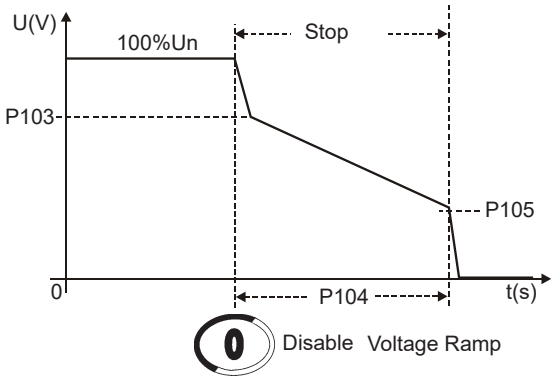 ***Figure 6.4** - Deceleration ramp by voltage decrement*
P106 (1) Automatic Detection of the Acceleration End with Voltage Ramp	0 to 1 [0=By Time] 1	<table><tr><th>P106</th><th>Description</th></tr><tr><td>0</td><td>By Time</td></tr><tr><td>1</td><td>Automatic</td></tr></table>***Table 6.6** - Selection of the Automatic Detection of the Acceleration End with Voltage Ramp* ☑ It allows applying full voltage to the motor as soon as it reaches its nominal speed, before the end of the time programmed in P102, for voltage ramp starting. ☑ The end of the acceleration ramp is detected when P007 reaches 95% of the line voltage at P004. ☑ This function is used to avoid that the motor maintain operated at the nominal speed with voltage below the nominal, thus avoiding **possible SCR burning** due to the synchronism loose in that condition.
P110 Current Limit	150 to 500 [300] 1% In of the Motor	☑ Defines the current limit during the motor start as a percentage of the nominal motor current set at P401. ☑ When the current limit is reached during the motor start, the Soft-Starter SSW-06 will maintain the current at this limit until the motor reaches the end of the start. ☑ When the current limit is not reached, the motor will start immediately. ☑ For more information about selection of the Current Limit control, refer to P202.

Parameter	Range [Factory Setting] Unit	Description / Notes
		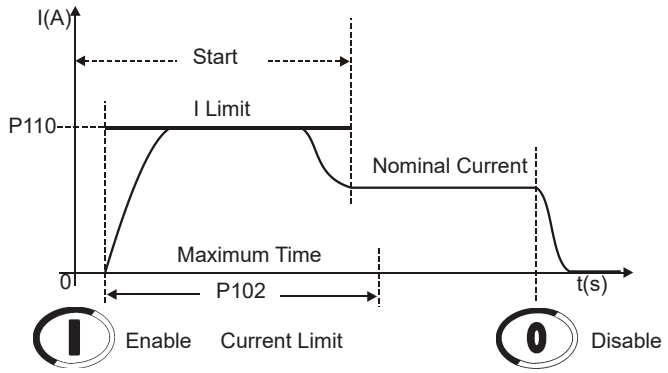 ***Figure 6.5*** *- Fixed starting Current Limit*
P111 Initial Current for the Current Ramp	150 to 500 [150] 1% In of the Motor	☑ Used for the control by Current Ramp, P202=4. ☑ Allows a current limit ramp to be programmed to help in the starting of loads that have a lower or higher starting torque. ☑ The initial value of the current limit is shown by P111, the final value is shown by P110 and the time is shown by P112, according to figure 6.6.
P112 Time for the Current Ramp	1 to 99 [20] 1% of P102	☑ Used for the control by Current Ramp, P202=4. ☑ It enables programming the time, in percent of P102, for the end Current Ramp. ☑ After the time, programmed at P112, has elapsed, it starts operation by Current Limit, given by P110. a) 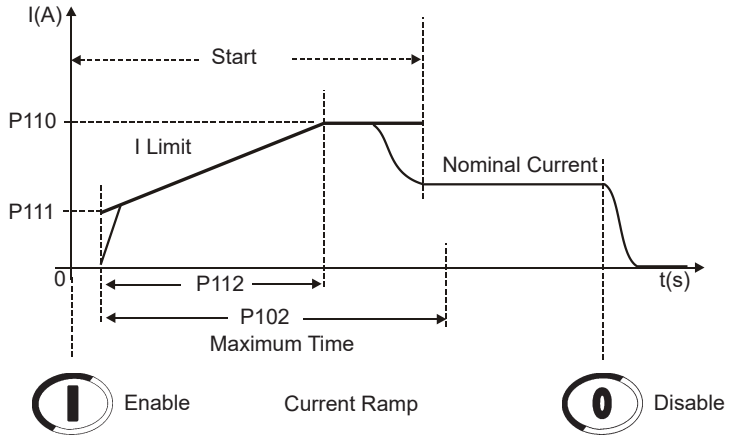 ***Figure 6.6 a)*** *- Current Limit by Current Ramp during Starting*

Parameter	Range [Factory Setting] Unit	Description / Notes

b)

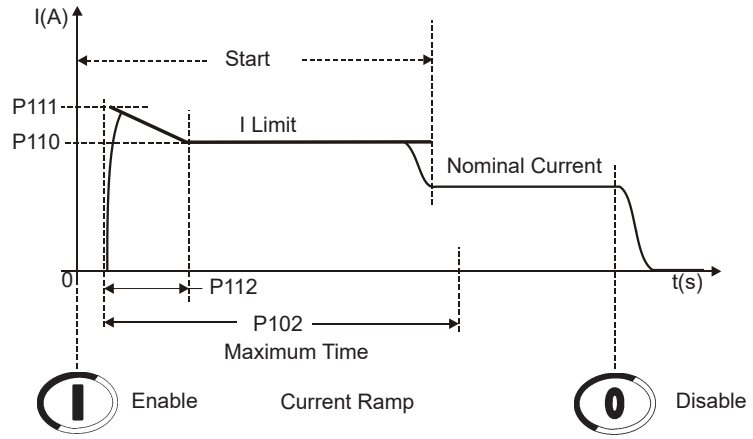

Figure 6.6 b) *- Current Limit by Current Ramp during Starting*

P120 (1)
Starting Torque Characteristics

1 to 3
[1=Constant]
-

P120	Starting Torque Profile
1	Constant (1 setting point)
2	Linear (2 setting points)
3	Quadratic (3 setting points)

Table 6.7 *- Starting torque profile*

☑ It enables choosing which torque limit profile the Soft-Starter SSW-06 will supply to the motor during the start.

☑ Three different types of Torque Limit Profile are available allowing the start of any type of load: constant or 1 point, linear or 2 points and quadratic or 3 points.

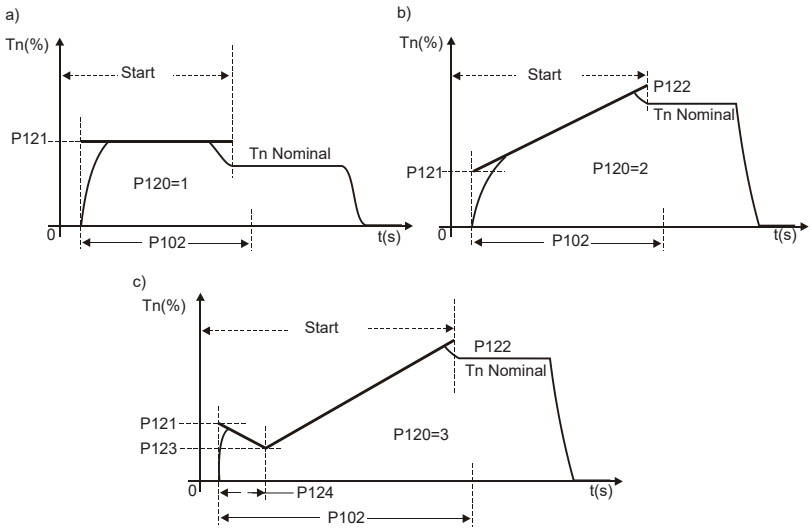

Figure 6.7 a) to c) *- Available Torque Profile during the start*

Parameter	Range [Factory Setting] Unit	Description / Notes
		NOTE! Choose the type of torque control, easier to program and set, according to the knowledge about the characteristics of the load.
P121 Initial Starting Torque	10 to 400 [30] 1% Tn of the Motor	☑ Enables programming an initial torque limit or a constant during the start, according to the torque type selected at P120.

P120	Action
1 (Constant)	P121 limits the maximum torque during the start
2 (Linear)	P121 limits the initial torque during the start
3 (Quadratic)	P121 limits the initial torque during the start

Table 6.8 *- Function of P121 according to P120*

☑ For more details about programming and application, refer to Torque Control at P202.

P122 End Starting Torque — 10 to 400 [110] 1% Tn of the Motor

☑ It enables programming an end torque limit for the start, when a linear or quadratic torque has been selected at P120.

P120	Action
1 (Constant)	P122 not used
2 (Linear)	P122 limits the end torque during the start
3 (Quadratic)	P122 limits the end torque during the start

Table 6.9 *- Function of P122 according to P120*

☑ For more details about programming and application, refer to Torque Control at P202.

P123 Minimum Starting Torque — 10 to 400 [27] 1% Tn of the Motor

☑ It enables programming an intermediate torque limit during the start, when a quadratic torque has been selected at P120.

P120	Action
1 (Constant)	P123 not used
2 (Linear)	P123 not used
3 (Quadratic)	P123 limits the intermediate torque during the start

Table 6.10 *- Function of P123 according to P120*

☑ For more details about programming and application, refer to Torque Control at P202.

P124 Time for the Minimum Start Torque — 1 to 99 [20] 1% of P102

☑ It enables programming the time for the intermediate torque limit during the start, as a percentage of the maximum time programmed at P102, when a quadratic torque has been set at P120.

P120	Action
1 (Constant)	P124 not used
2 (Linear)	P124 not used
3 (Quadratic)	P124 time for the intermediate torque limit during the start

Table 6.11 *- Function of P124 according to P120*

☑ For more details about programming and application, refer to Torque Control at P202.

Parameter	Range [Factory Setting] Unit	Description / Notes
P125 (1) Stopping Torque Characteristics	1 to 3 [1=Constant] -	

P125	Stop Torque Profile
1	Constant (1 set point)
2	Linear (2 set points)
3	Quadratic (3 set points)

Table 6.12 *- Stop torque characteristics*

☑ Here you can choose the torque limit profile that the Soft-Starter SSW-06 shall supply to the motor during the stop.

☑ Three different types of torque profiles are available that permit improving the speed performance during the stop process.

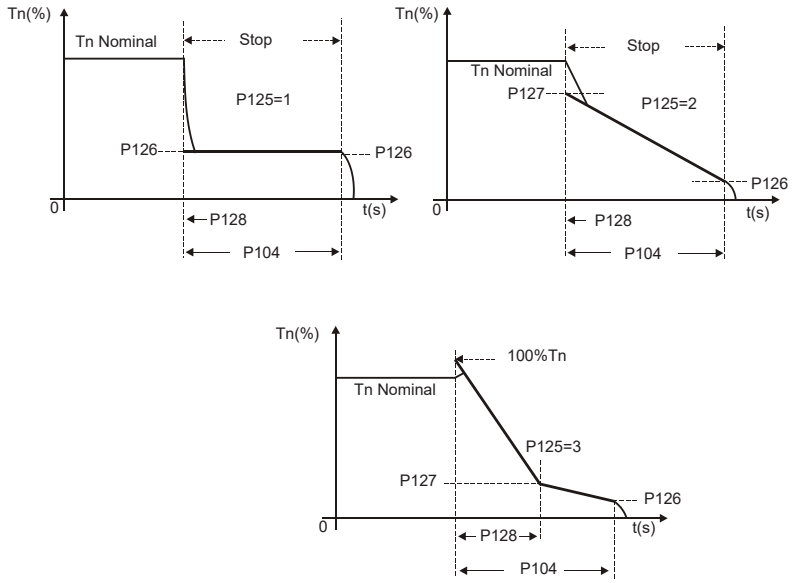

Figure 6.8 *- Available torque profiles for the stop process*

NOTE!
Choose the type of torque control, easier to program and set, according to the knowledge about the characteristics of the load.

P126 End Stop Torque	10 to 100 [20] 1% Tn of the Motor	

☑ Here you can program the end torque limit or constant for the stop, according to the torque type selected at P125.

P125	Action
1 (Constant)	P126 limits the maximum torque during the stop process
2 (Linear)	P126 limits the end torque during the stop process
3 (Quadratic)	P126 limits the end torque during the stop process

Table 6.13 *- Function of P126 according to P125*

☑ For more details about programming and application, refer to Torque Control at P202.

Parameter	Range [Factory Setting] Unit	Description / Notes
P127 Minimum Stop Torque	10 to 100 [50] 1% Tn of the Motor	☑ Here you can program the initial torque limit or an intermediate torque limit for the stop, when a linear torque or a quadratic torque has been selected at P125.

P125	Action
1 (Constant)	P127 not used
2 (Linear)	P127 limits the torque when the motor is stopped
3 (Quadratic)	P127 limits the intermediate torque for the stop

Table 6.14 *- Function of P127 according to P125*

☑ For more details about programming and application, refer to Torque Control at P202.

P128 Time for the Minimum Stop Torque	1 to 99 [50] 1% of P104	☑ Here you can program the time for the intermediate stop torque, as percent of the maximum time programmed at P104, when the quadratic torque has been selected at P125.

P125	Action
1 (Constant)	P128 not used
2 (Linear)	P128 not used (time equal to 0)
3 (Quadratic)	P128 time for the intermediate torque limit for the stop process

Table 6.15 *- Function of P128 according to P125*

☑ For more details about programming and application, refer to Torque Control at P202.

P130 (1) Pump Control	0 [0=Pump I] -	☑ This parameter is reserved for future software versions with hydraulic pump control type. The current version has been developed for the control of centrifugal hydraulic pump, considering quadratic motor loads. ☑ For more details about the Pump Control, see P202.

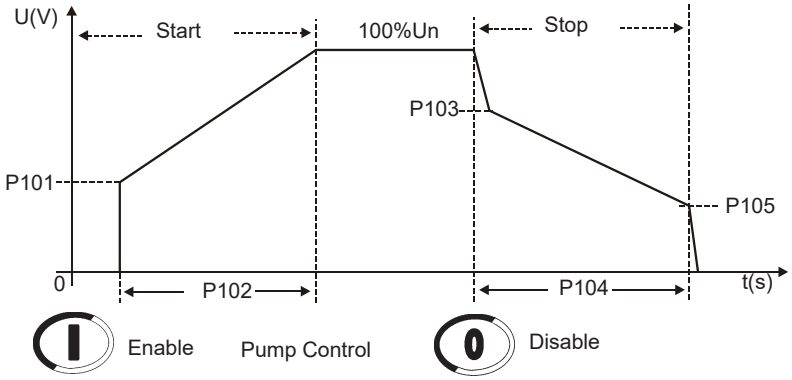

Figure 6.9 *- Start and Stop by Pump Control*

P140 (1) External By-pass Contactor	0 to 1 [0=Inactive] -	

P140	Action
0 (Inactive)	Without external By-pass contactor
1 (Active)	With external By-pass contactor

Table 6.16 *- External By-pass contactor*

☑ This function is enabled when the installation of an external By-pass contactor is required that must be connected in parallel to the Soft-Starter SSW-06.

Parameter	Range [Factory Setting] Unit	Description / Notes
		☑ The models from 85A to 820A have an internal By-pass contactor. ☑ The models from 950A to 1400A do not have an internal By-pass contactor. ☑ When P140=1 in the models with an internal By-pass, the internal By-pass will not enable. ☑ The external By-pass contactor is used: **(1)** Models without internal By-pass - To allow the connection of an external By-pass contactor; **(2)** Models with internal By-pass - For instance when a direct start is required in case of an emergency. The internal By-pass contactors do not permit a direct start. These contactors can be enabled only after the motor start has been realized by the thyristors; **(3)** Models with internal By-pass - If the motor stalls frequently during By-pass condition. **NOTE!** See the recommended setup at items 3.3 and 3.3.12 for more information.
P150 (1)(2) Inside Delta Motor Connection	0 to 1 [0=Inactive] -	

P150	Action
0 (Inactive)	Soft-Starter SSW-06 with standard motor connection
1 (Active)	Soft-Starter SSW-06 with inside delta motor connection

***Table 6.17** - Motor connection type*

☑ SSW-06 offers two operation modes: Standard Connection or Inside Delta Motor Connection.

☑ When a Standard Connection is used, the motor is connected in series to the Soft-Starter SSW-06 through three cables.

☑ When an Inside Delta Connection is used, the Soft-Starter SSW-06 is connected separately in each winding through six cables (see item 3.2.5.2). In this type of connection, the current that flows through the Soft-Starter SSW-06 is only the current of the inside delta motor connection, in other words, 58% of the nominal motor current. This characteristic changes the relation between the Soft-Starter SSW-06 nominal currents and those of the motor. In this connection, the Soft-Starter can be used with its nominal current dimensioned in the following way:

- 1.5 times the nominal motor current during start;
- 1.73 times the nominal motor current during full voltage.

During the start, the relation is lower due to the characteristics that are common to this type of connection (inside delta) the Thyristors of the Soft-Starter need to conduct the same current for a lower time period, increasing with this the losses in the Thyristor during the start.

☑ The standard connection requires less output wiring. The Inside Delta Motor Connection requires double wiring, but for short distances, this will be a cheaper option for the Soft-Starter + motor + wiring set.

ATTENTION!
Do not operate the motor when P150 has not been programmed correctly. Soft-Starter SSW-06 can be seriously damaged when this parameter has not been programmed correctly.

6.3 CONFIGURATION PARAMETERS - P200 to P299

Parameter	Range [Factory Setting] Unit	Description / Notes
P200 Password	0 to 1 [1] -	

P200	Action
0 (Inactive)	This Parameter allows parameter content changing, independent of P000
1 (Active)	Change of Parameter content is only possible, when P000 is equal to the password value

***Table 6.18** - Password*

☑ With the Factory Setting, the password will be P000=5.
☑ To change the Password, see P000.

P201 (2)
Language Selection

0 to 3
[To be defined by the user]
-

P201	Description
0	Português
1	English
2	Español
3	Deutsch

***Table 6.19** - Language selection*

P202 (1)
Type of Control

0 to 4
[0=Voltage Ramp]
-

P202	Type of Control
0	Voltage Ramp
1	Current Limit
2	Pump Control
3	Torque Control
4	Current Ramp

***Table 6.20** - Types of control*

☑ Soft-Starter SSW-06 has five starting control types to better match all application requirements.

Start by Voltage Ramp (1):
The start by Voltage Ramp is the most used starting method. The Soft-Starter SSW-06 applies the voltage to the motor without voltage or current feedback. This method is used for loads with lower initial torque or quadratic torque.
This type of control can be used as initial operating test.

Start by Current Limit (2):
The maximum current level is maintained during the start and is set according to the application requirements.
This method is used for loads with higher initial torque or constant torque.
This type of control is used for matching the start process to the limits of the power supply capacity.

Start by Current Ramp (3):
The maximum current level is limited during the start process, however higher or lower current limits can be set during the beginning of the start sequence.

Parameter	Range [Factory Setting] Unit	Description / Notes
		It can substitute the kick start functions for loads with higher initial torques. This type of control is used for loads with lower or higher initial torques. This type of control is used to match the start process to the limits of the power supply capacity. **Start by Pump Control (4):** This type of control provides the required torque for starting and stopping hydraulic centrifugal pumps smoothly. It has a special algorithm for application in centrifugal pumps, where loads with quadratic torques are present. This special algorithm aims to minimize pressure “overshoots” in the hydraulic piping, which can result in breakdown or excessive pump wearing. **Start by Torque Control:** The SSW-06 Soft-Starter has a high performance and totally flexible torque control algorithm to meet the needs of any application, for smoothly starting or stopping the motor and its load. **Torque Control with 1 setting point (2):** This type of control allows a constant starting torque limitation. **Torque Control with 2 setting points (3):** This type of control allows the starting torque limitation through linear ramp. **Torque Control with 3 setting points (4):** This type of control allows the setting of the starting torque limitation at three different points: initial, intermediate and final. It also allows the start of quadratic loads, among others. **(1)** Very easy to set and program **(2)** Easy to set and program **(3)** Set and program, requires knowledge of the load. **(4)** Set and program, requires extensive knowledge of the load. **NOTES!** 1) These types of controls are arranged according to the use and programming difficulty level. Thus, we recommend starting with the easier control modes first. 2) Every time the content of P202 is changed, the Soft-Starter will start a sequence routine of minimum settings for each selected type of control. You must run and set all parameters of this sequence (up to the last) when required. Only after all settings have been made can you start the motor.

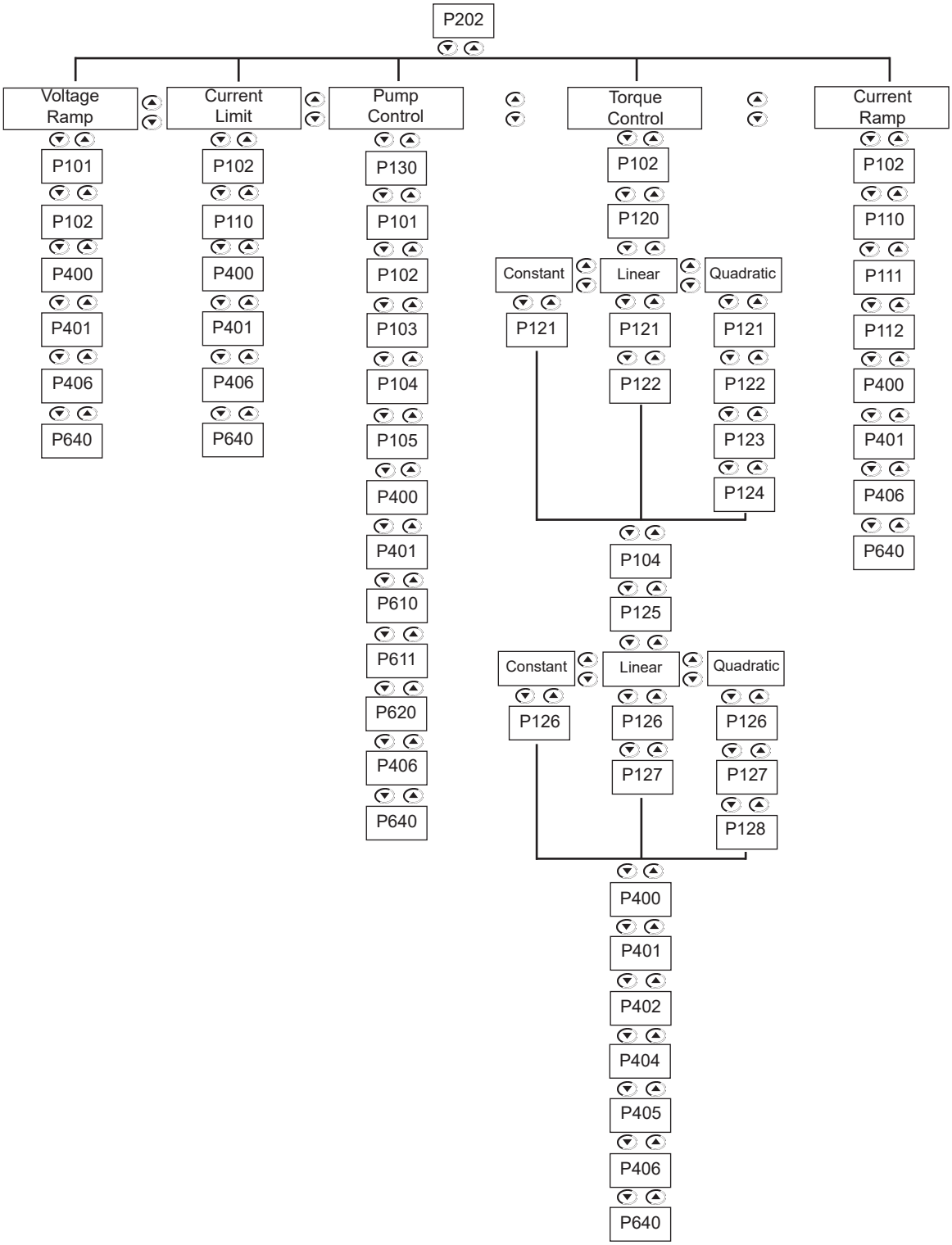

Figure 6.10 *- Parameter sequence according to the selected type of control*

Parameter	Range [Factory Setting] Unit	Description / Notes

☑ The table below shows the relation between the adopted starting control type and the automatically selected stop control type.

START \ STOP	Voltage Ramp	Current Limit	Current Ramp	Pump Control	Torque Control
Voltage Ramp	X				
Current Limit	X				
Current Ramp	X				
Pump Control				X	
Torque Control					X

Table 6.21 *- Stop/Start operation*

P204 (1)
Load/Save Parameters

0 to 16
[0]
-

☑ Parameters with note **(2)** indicated are not changed when Factory Settings are loaded through P204 = 5.

☑ To load User 1 Parameters (P204=7) and/or User 2 (P204=8) in the operation area of Soft-Starter SSW-06, it is necessary for User Memory 1 and/or User Memory 2 to have been saved previously (P204=10 and/or P204=11).

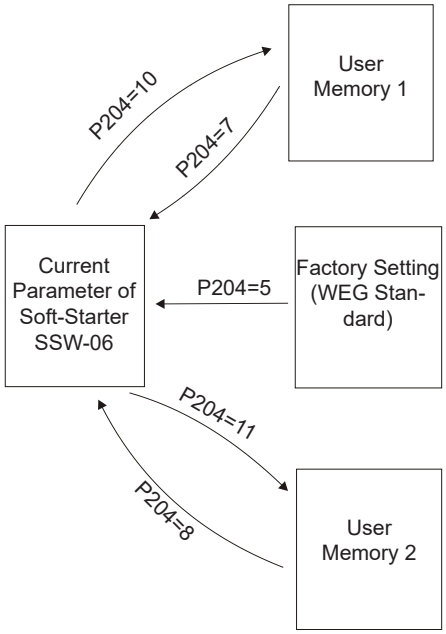

Figure 6.11 *- Parameter transfer*

Parameter	Range [Factory Setting] Unit	Description / Notes

P204	Action
0, 1, 2, 6, 9, 12	**Not used:** No action
3	Resets the parameters from P043 to P050
4	Resets the parameters from P053 to P058
5	**Loads Factory Default:** Loads current Soft-Starter parameters with factory settings
7	**Loads User 1:** Loads current Soft-Starter parameters with the values stored in Memory 1.
8	**Loads User 2:** Loads current Soft-Starter parameters with the values stored in Memory 2.
10	**Save User 1:** Transfers the current parameter contents of the Soft-Starter to memory 1
11	**Save User 2:** Transfers the current parameter contents of the Soft-Starter to memory 2
13	Erases the SoftPLC applicative
14	Resets the parameters from P952 to P969
15, 16	Use reserved to the factory

Table 6.22 *- Action of loading/saving parameters*

NOTE!
Parameter loading/saving will be executed only after parameter setting and after the key PROG has been pressed .

P205
Display Default Selection

0 to 9
[2]
-

☑ This Parameter selects which parameter listed in table 6.23 will be displayed after the Soft-Starter has been powered-up.

P205	Status
0	P001 (Soft-Starter current % In of the Soft-Starter)
1	P002 (Motor current % In of the Motor)
2	P003 (Motor current (A))
3	P004 (Supply Line Voltage (V))
4	P005 (Supply Line Frequency (Hz)
5	P006 (Soft-Starter Status)
6	P007 (Output Voltage (V))
7	P008 (Power Factor)
8	P009 (Motor Torque % Tn of the Motor)
9	P010 (Output Power)

Table 6.23 *- Options display default*

P206
Auto-Reset Time

0 to 600
[0=Inactive]
1s

☑ In the event of a fault trip E03, E04, E05, E06, E16, E32, E65, E66, E70, E74, E78, E79, E80 or E81, the Soft-Starter SSW-06 can initiate an automatic reset after the time given by P206 has elapsed.
☑ If P206 ≤ 2 Auto-Reset does not occur.
☑ If after Auto-Reset the same fault is repeated three times consecu-

Parameter	Range [Factory Setting] Unit	Description / Notes
		tively, the Auto-Reset function will be disabled. A fault is considered consecutive if it happens again within 30 seconds after Auto-Reset. ☑ Thus if an error occurs four times consecutively, it will be displayed permanently (and the Soft-Starter will be disabled).
P215 (1) Copy Function	0 to 2 [0=Inactive] -	☑ The copy function is used to transfer the content of the parameters from one Soft-Starter SSW-06 to another. The Soft-Starters must be of the same type (voltage/current) and the same software version must be installed.

P215	Action	Explanation
0	Inactive	-
1	Copy SSW → HMI	Transfers the current parameter contents from the Soft-Starter and from Users 1 or 2 to the non-volatile (HMI) keypad memory (EEPROM). The current Soft-Starter parameters are not changed.
2	Paste HMI → SSW	Transfers the contents of the non-volatile (HMI) keypad memory (EEPROM) to the current Soft-Starter SSW-06 parameters and to user 1 or 2 memories.

Table 6.24 *- Copy function*

Procedures:

1. Connect the keypad to the Soft-Starter SSW-06 from which the parameters will be copied (Soft-Starter A).
2. Set P215=1 (copy) for transferring the parameter from the Soft-Starter A to the HMI. Press the key PROG . While copy function is being executed, the display will show **COPY**. P215 resets automatically to 0 (Inactive) after the transfer has been completed.
3. Disconnect the keypad from the Soft-Starter SSW-06.
4. Connect the same keypad to the Soft-Starter SSW-06 to which the parameters should be transferred (Soft-Starter B).
5. Set P215=2 (paste) for transferring the content from the non-volatile keypad memory (EEPROM containing the parameters of the Soft-Starter A) to the Soft-Starter B. Press the key PROG. While the keypad is executing the paste function, the display shows **COPY**. When P215 returns to 0, the parameter transfer has been concluded. Now Soft-Starters A and B have the same parameter content.

Please remember:
If Soft-Starters A and B command different motors, please check the motor parameters of Soft-Starter B.
For copying the parameter contents from Soft-Starter A to other Soft-Starters, repeat procedures 4 and 5 above.

Parameter	Range [Factory Setting] Unit	Description / Notes

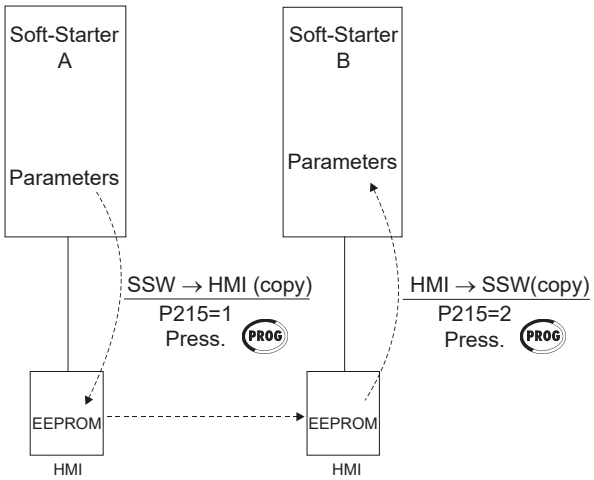

***Figure 6.12** - Parameter Copying from "Soft-Starter A" to "Soft-Starter B"*

☑ The Keypad can not be operated while it is executing the read or write procedures.

NOTES!

1) If the Keypad (HMI) has saved parameters of a "different version" than that installed in Soft-Starter SSW-06 to which it is trying to copy the parameters, the operation will not be executed and Soft-Starter SSW-06 will display error E10 (Error: Copy Function not permitted). "Different Version" are those that are different in "x" or "y", supposing that the numbering of Software Versions is described as **Vx.yz**.
2) This function changes all SSW-06 parameters to the new values.

P218
LCD Display Contrast Adjustment

0 to 150
[127]
-

☑ It allows the adjustment of the LCD Display contrast, as a function of the viewing angle. Increase/decrease the parameter content until the best contrast is obtained.

P220 (1)
LOCAL/REMOTE Source Selection

0 to 10
[2]
-

☑ Defines the command source that will select between the LOCAL / REMOTE operation.

P220	Local/Remote Selection	Default Condition
0	Always Local Condition	Local
1	Always Remote Condition	Remote
2	Key LOC REM of the Keypad	Local
3	Key LOC REM of the Keypad	Remote
4	Digital Inputs DI4 ... DI6	(P266 ... P268)
5	Serial Communication	Local
6	Serial Communication	Remote
7	Fieldbus Communication	Local
8	Fieldbus Communication	Remote
9	SoftPLC	Local
10	SoftPLC	Remote

***Table 6.25** - LOCAL/REMOTE Selection*

Parameter	Range [Factory Setting] Unit	Description / Notes
		☑ Default condition = when Soft-Starter SSW-06 is powered-up (start--up). ☑ In the factory default setting, the key LOC REM of the Keypad will select Local or Remote Mode. When powered up, the Soft-Starter SSW-06 starts in Local mode.
P229 (1) Local Status Command Selection **P230** (1) Remote Status Command Selection	0 to 4 [0=HMI] - 0 to 4 [1=Digital Inputs] -	☑ Defines the origin of the Soft-Starter SSW-06 enable/disable commands.

P229/P230	Origin of the Commands
0	Keypad (HMI)
1	Digital Inputs DIx
2	Serial Communication
3	Fieldbus Communication (DeviceNet or Profibus DP)
4	SoftPLC

Table 6.26 *- Command Selection*

P231 (1)
FWD/REV Selection

0 to 2
[0=Inactive]
-

P231	Action
0	Inactive
1	By Contactor
2	JOG Only

Table 6.27 *- FWD/REV selection*

"By Contactor"

☑ This option enables the possibility of changing the direction of rotation via contactors connected at the input power supply.

☑ The new method implemented in the Soft-Starter SSW-06 allows the use of only two contactors to change the motor direction of rotation and isolate the power supply at the same time.

☑ Possibility of changing the direction of rotation with inside delta motor connection.

☑ When the motor is stopped the contactors are opened. When the motor is enabled the direction specific contactor is enabled.

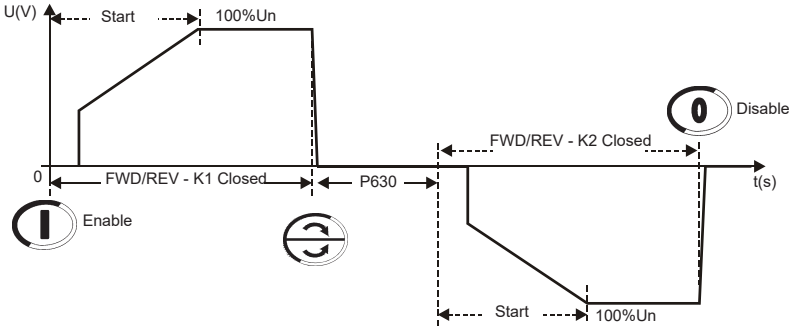

Figure 6.13 *- Change of rotation via contactor*

Parameter	Range [Factory Setting] Unit	Description / Notes
		NOTES! 1. Set P277=4 (FWD/REV-K1) and P278=4 (FWD/REV-K2) before connecting the power supply. 2. The method used to start the motor to a new direction of rotation will be the same as the one set to start the motor for the first time. 3. The motor will start again only after the time set at P630 (time delay after stopping) has reached zero. 4. See the recommended setup at items 3.3 and 3.3.8. **"JOG Only"** ☑ This option allows the slow speed with Jog in both forward and reverse directions without auxiliary contactors connected at the input power supply. ☑ See more information at P510 and P511 parameters. 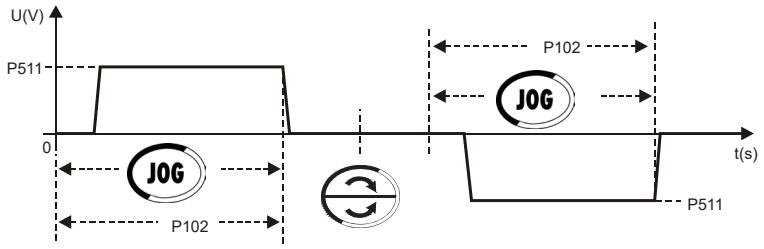 ***Figure 6.14** - Motor direction of rotation with "Jog only"*
P251 AO1 Output Function (0 to 10)V	0 to 11 [0=Not Used] -	☑ Check possible options in table 6.29 and figure 6.15. ☑ AO1=10V when the values shown in table 6.29 are on the full scale and P252=1.000.
P252 AO1 Analog Output Gain	0.000 to 9.999 [1.000] 0.001	☑ Sets the gain of the analog output AO1. ☑ For P252=1.000 the value of output AO1 is set according to the description in figure 6.15.
P253 AO2 Analog Output Function (0 to 20)mA or (4 to 20)mA	0 to 11 [0=Not Used] -	☑ Check the possible options in table 6.29 and figure 6.15. ☑ AO2=20mA when the values shown in table 6.29 are on the full scale and P254=1.000.
P254 AO2 Analog Output Gain	0.000 to 9.999 [1.000] 0.001	☑ Sets the gain of the analog output AO2. ☑ For P254=1.000 the value of output AO2 is set according to the description in figure 6.15.

Parameter	Range [Factory Setting] Unit	Description / Notes
P255 AO2 Analog Output Type (0 to 20)mA or (4 to 20)mA	0 to 1 [0=0-20mA] -	☑ It selects the signal type of the current analog output AO2.

P255	AO2 Output Type
0	(0 to 20)mA
1	(4 to 20)mA

Table 6.28 *- AO2 signal type*

☑ For transforming the current analog output AO2 to a voltage output of 0 to 10V, connect a resistor of 500Ω ± 1% 0.5W in parallel with the output signal.

☑ Remember when the output type is selected to (4 to 20)mA, this will be the total range of the signal output.
0% of the signal = 4mA and 100% of the signal = 20mA.

P251/P253	Function of the Analog Output	Full Scale When
0	Not used	-
1	Current in % In of the SSW	5 x P295
2	Input Voltage in % Un of the SSW	1.5 x P296(max.)
3	Motor Voltage in % Un of the SSW	1.5 x P296(max.)
4	Power Factor	P008 = 1.00
5	Thermal Protection	P050 = 250%
6	Power in W	1.5 x √3 x P295 x P296(max.)
7	Power in VA	1.5 x √3 x P295 x P296(max.)
8	Torque in % Tn of the Motor	5 x P009 = 100%
9	Fieldbus	16383 (3FFFh)
10	Serial	16383 (3FFFh)
11	SoftPLC	16383 (3FFFh)

Table 6.29 *- Functions of the Analog Outputs*

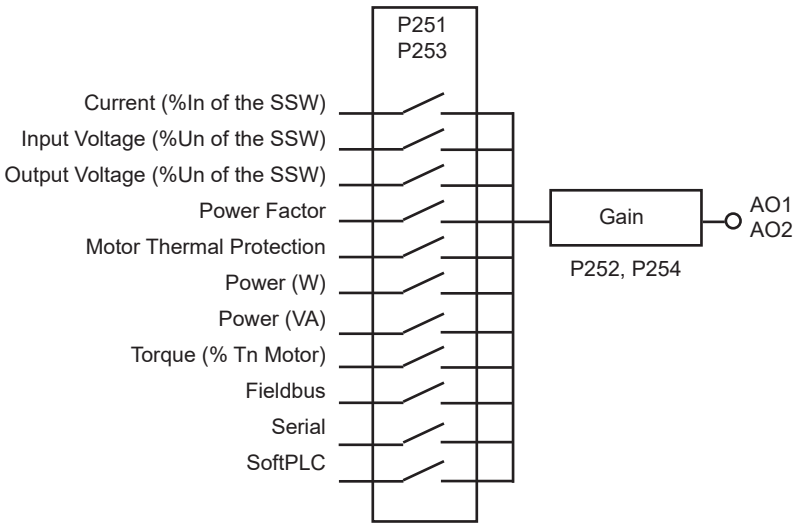

Figure 6.15 *- Block diagram of the Analog Outputs*

☑ Scale of the Analog Output indications:
- Full scale =10V: for Output AO1.
- Full scale =20mA for Output AO2.

Parameter	Range [Factory Setting] Unit	Description / Notes
P263 (1) Digital Input DI1 Function	0 to 5 [1=Start/Stop]	☑ Check the available options in table 6.30. ☑ The states of the digital inputs can be monitored in parameter P012. ☑ **"Start/Stop"** = Closed/Opened the digital input respectively. In this new version of software it is necessary to program a digital input for this function. Do not program more than a digital input for this function. Do not program Start or Stop (3 Wires) in the other digital input. ☑ **"Start (3 Wires)"** = Start the motor when the digital input is closed. Use only normally opened pulsing switches. Do not program more than a digital input for this function. Do not program Start/Stop (2 Wires) in the other digital input. A Stop (3 Wires) in another digital input must be programmed. ☑ **"Stop (3 Wires)"** = Stop the motor when the digital input is open. Use only normally closed pulsing switches. Do not program more than a digital input for this function. Do not program Start/Stop (2 Wires) in the other digital input. A Start (3 Wires) in another digital input must be programmed. ☑ **"Local/Remote"** = Digital Input is open/closed respectively. Do not programme more than one digital input for this function. ☑ **"Error Reset"** = Resets the errors when the digital input is closed. Use only pulsing switch. When the input remains closed, the error reset will not act. ☑ **"No External Fault"** = No External Fault will be present when the digital input is closed. ☑ **"General Enabling/General Disabling"** = Closed/Open on the digital input, respectively. This function allows the motor to start when it is in general enabling and to stop without a deceleration ramp when given the general disabling command. There is no need to program General Enabling to start the motor via digital input. If the general enabling is programmed via digital input, this must be closed to allow the motor to start, even if the commands are not via digital inputs. ☑ **"Motor Thermistor"** = The DI6 digital input is associated to the input of the motor thermistor (PTC). If you want to used the DI6 as a normal digital input, you must program the Parameter P268 to the desired function and you must connect in series with the input, a resistor with its resistance between 270Ω and 1600Ω, as shown below: 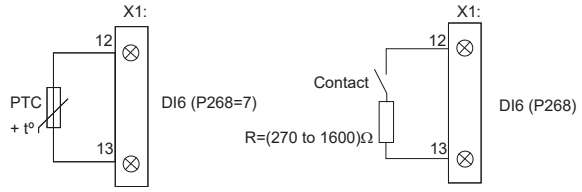 ***Figure 6.16** - PTC connection diagram or Digital Input* ☑ **"Rotation Direction"** = Digital input open K1 "on" and K2 "off", digital input closed K1 "off" and K2 "on" (item 3.3.8). This enables the change control of the rotation direction through digital input. Do not programme more than one digital input for this function. ☑ **"Jog"** = It is possible to enable slow speed with Jog via Digital Input when it is closed. Use a push-button only. If more than one digital input is programmed for this function, any one which is closed enables the Jog. ☑ **"Brake Off"** = It is possible to disable the braking methods when

Parameter	Range [Factory Setting] Unit	Description / Notess

the digital input is open, for extra safety, monitor real motor standstill and disable the braking immediately. If more than one digital input is programmed for this function, any one which is opened disables the braking immediately.

☑ **"Emergency Start"** = It makes possible start and stop the motor during any error action, not respecting the protections of Soft-Starter SSW-06 or the motor. This option is used for the hydraulical pumps of protection against fire.

NOTE!
The Emergency Start only must be used in emergency case, otherwise the Soft-Starter SSW-06 or the motor may be damaged.

DIx Parameter / Function	P263 (DI1)	P264 (DI2)	P265 (DI3)	P266 (DI4)	P267 (DI5)	P268 (DI6)
Not Used	0	0	0	0	0	0
Start/Stop	1	3	3	-	-	-
Start (Three wires)	2	4	4	-	-	-
Stop (Three wires)	3	1	5	-	-	-
General Enabling	4	5	1	-	-	-
FWD/REV	-	-	-	1	1	1
Local/Remote	-	-	-	2	2	2
No External Fault	-	-	-	3	3	3
JOG	-	-	-	4	4	4
Brake Off	-	-	-	5	5	5
Reset	5	2	2	6	6	6
Motor Thermistor	-	-	-	-	-	7
Emergency Start	-	-	6	-	-	-

***Table 6.30** - Functions of the Digital Inputs*

NOTE!
The options of the digital inputs DI1, DI2 and DI3 had been modified in relation the previous versions of software to the V1.60.

P277 (1)
RL1 Relay Output Function

0 to 12
[1= Running]
-

P278 (1)
RL2 Relay Output Function

0 to 12
[2= Full Voltage]
-

P279 (1)
RL3 Relay Output Function

0 to 12
[6=No Fault]
-

☑ Check the available options in table 6.31.
☑ The status of the digital outputs can be monitored in Parameter P013.
☑ The digital output will be enabled when the function which has been programmed for the digital output is true.

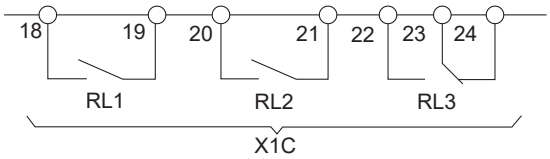

***Figure 6.17** - Status of the relay digital outputs when disabled*

☑ **"Not Used"** = the digital outputs are disabled.
☑ **"Running"** = the output will be enabled instantly with the Soft-Starter SSW-06 Enable command, and will only be disabled when the Soft-Starter SSW-06 receives the command Disable, or when the end of the deceleration ramp is reached, if programmed.
☑ **"Full Voltage"** = the output will be enabled when the Soft-Starter SSW-06 reaches 100% Un and it will be disabled when the Soft-Starter SSW-06 receives the command Disable.
☑ **"External By-pass"** = its operation is similar to the "Full Voltage" operation, but it must be applied only when the use of an external By-pass contactor is required. See P140 and the recommended setup at items 3.3 and 3.3.12.
☑ **"FWD/REV-K1"** = this operation is similar to the "Running", but it

Parameter	Range [Factory Setting] Unit	Description / Notes

must be enabled with forward motor direction of rotation. See P231 and the recommended setup at items 3.3 and 3.3.8.

- ☑ **"FWD/REV-K2"** = this operation is similar to the "Running", but it must be enabled with reverse motor direction of rotation. See P231 and the recommended setup at items 3.3 and 3.3.8.
- ☑ **"DC-Braking"** = the output will be enabled while the DC-Braking is active. See P500 and the recommended setup at items 3.3 and 3.3.11.
- ☑ **"No Fault"** = the output is enabled, if the Soft-Starter SSW-06 is not disabled due to any error.
- ☑ **"Fault"** = the output is enabled, if the Soft-Starter SSW-06 is disabled due to any error.
- ☑ **"Fieldbus"**= it makes it possible for the master of a Fieldbus communication network to control the digital output. Refer to the Fieldbus communication manual for more details.
- ☑ **"Serial"**= it makes it possible for the master of a serial communication network to control the digital output. Refer to the serial communication manual for more details.
- ☑ **"SoftPLC"**= it allows the SoftPLC to control the digital output. Refer to the WLP Software manual for more details.
- ☑ **"No Alarm"**= the output is enabled, if the Soft-Starter SSW-06 is not disabled due to any alarm.
- ☑ **"Alarm"**= the output is enabled, if the Soft-Starter SSW-06 is disabled due to any alarm.
- ☑ **"Breaker Shunt Trip" =** Error Group - When one of the following errors occur: E11, E15, E18, E19, E41, E77, the output is activated. The tripping of any of these protections may indicate that the SSW-06 has a short circuit in the power circuit, thyristors or by-pass. They can be used to open the power isolation circuit breaker (Q1) (Item 3.3).

RLx Parameter / Function	P277 (RL1)	P278 (RL2)	P279 (RL3)
Not Used	0	0	0, 4
Running	1	1	1
Full Voltage	2	2	2
External By-pass	3	3	3
FWD/REV-K1	4	-	-
FWD/REV-K2	-	4	-
DC-Braking	5	5	5
No Fault	6	6	6
Fault	7	7	7
Fieldbus	8	8	8
Serial	9	9	9
SoftPLC	10	10	10
No Alarm	11	11	11
Alarm	12	12	12
Breaker Shunt Trip	13	13	13

***Table 6.31** - Functions of the Relay Outputs*

P295 (1)(2)
SSW Nominal Current

0 to 20
[According to the nominal current of the Soft-Starter SSW-06]
-

P295	Nominal Current	P295	Nominal Current	P295	Nominal Current
0	10A	8	170A	16	670A
1	16A	9	205A	17	820A
2	23A	10	255A	18	950A
3	30A	11	312A	19	1100A
4	45A	12	365A	20	1400A
5	60A	13	412A	21	1000A
6	85A	14	480A	22	1300A
7	130A	15	604A		

***Table 6.32** - Nominal current configuration*

Parameter	Range [Factory Setting] Unit	Description / Notes
		ATTENTION! Always program this parameter with a current that exactly matches the current of the model of your Soft-Starter SSW-06, described in the nameplate of the SSW-06. An error in programming this parameter may damage your Soft-Starter SSW-06.
P296 (1)(2) Nominal Voltage	0 to 1 [According to the nominal voltage of the Soft-Starter SSW-06] -	

P296	Voltage Range
0	220/575V
1	575/690V

Table 6.33 *- Voltage range*

ATTENTION!
Always program this parameter with a voltage that exactly matches the voltage of the model of your Soft-Starter SSW-06.

6.4 - SERIAL COMMUNICATION PARAMETERS - P300 to P399

P308 (1)(2) Soft-Starter Address on the Serial Communication Network	1 to 247 [1] 1	☑ Defines the Soft-Starter SSW-06 address on the serial Modbus-RTU communication network. ☑ For more information, refer to the Serial Communication Manual for the Soft-Starter SSW-06.
P309 (1)(2) Fieldbus Communication Board Enabling	0 to 9 [0=Inactive] -	

P309	Action
0	Inactive
1	Profibus-DP (1 Input and 1 Output)
2	Profibus-DP (4 Inputs and 4 Outputs)
3	Profibus-DP (7 Inputs and 7 Outputs)
4	DeviceNet (1 Input and 1 Output)
5	DeviceNet (4 Inputs and 4 Outputs)
6	DeviceNet (7 Inputs and 7 Outputs)
7	EtherNet (1 Input and 1 Output)
8	EtherNet (4 Input and 4 Output)
9	EtherNet (7 Input and 7 Output)

Table 6.34 *- Fieldbus Communication Protocol Type*

☑ Enables and defines the protocol type of the Fieldbus Communication Board.
☑ For more information, refer to the Fieldbus Communication Manual for the Soft-Starter SSW-06.

NOTE!
Without a Fieldbus Communication Board, this parameter must remain at 0 (not used).

P310 Profibus DP or DP-V1 Master Stop Detection	0 to 1 [0=Inactive] 1	

P310	Description
0	Inactive
1	Active

Table 6.35 *- Selection of the Profibus DP master stop detection*

☑ It allows, through the bit 6 of the control word, detecting that the master of the Profibus DP or DPV1 is stopped. Refer to the Fieldbus communication manual for more details.
☑ When it occurs it will indicate E29. In order to prevent the error, the master must keep the bit 6 in 1.

Parameter	Range [Factory Setting] Unit	Description / Notes
P312 (1)(2) Protocol Type and Transfer Rate of the Serial Communication	1 to 9 [1=Modbus-RTU (9600bps, no parity)] -	

P312	Action
1	Modbus-RTU (9600bps, no parity)
2	Modbus-RTU (9600bps, odd parity)
3	Modbus-RTU (9600bps, even parity)
4	Modbus-RTU (19200bps, no parity)
5	Modbus-RTU (19200bps, odd parity)
6	Modbus-RTU (19200bps, even parity)
7	Modbus-RTU (38400bps, no parity)
8	Modbus-RTU (38400bps, odd parity)
9	Modbus-RTU (38400bps, even parity)

Table 6.36 *- Serial Communication Protocol Type*

☑ Defines the protocol standards of the serial Modbus-RTU communication.
☑ For more information, refer to Serial Communication Manual for the Soft-Starter SSW-06.

Parameter	Range [Factory Setting] Unit	Description / Notes
P313 Serial and Fieldbus Communication Error Actions (E28, E29 and E30)	0 to 3 [0=Inactive] -	

P313	Action
0	Inactive
1	Disable
2	General Disable
3	Changes to Local
4	Inactive
5	Fatal Fault

Table 6.37 *- Error action of the Serial and Fieldbus Communication*

☑ Defines the action to be adopted when some errors relating to the Serial or Fieldbus Communication occur.
☑ For more information refer to the Serial Communication Manual and/or to the Fieldbus Communication Manual for the Soft-Starter SSW-06.

NOTE!
When Serial Communication or Fieldbus Communication is not used, this parameter must remain at 0 (not used).

Parameter	Range [Factory Setting] Unit	Description / Notes
P314 (1) Timeout Time for Serial Communication Telegram Reception	0 to 999 [0=Not Used] 1s	☑ Allows time programming for the fault detection during the serial Modbus-RTU communication. So you can adopt an action when, for instance, the communication with the master of the Modbus-RTU network is lost. ☑ For more information, refer to the Soft-Starter SSW-06 Serial Communication Manual.

NOTE!
This parameter must remain at 0 (not used), when the serial communication is not being used.

Parameter	Range [Factory Setting] Unit	Description / Notes
P315 (1) Read Parameter via Fieldbus 1	0 to 999 [0] -	☑ This parameter allows selecting the number of the first parameter, which content will be sent from the Soft-Starter SSW-06 to the Master of the Fieldbus network. ☑ For more details, refer to the Soft-Starter SSW-06 Fieldbus Communication Manual.

Parameter	Range [Factory Setting] Unit	Description / Notes
P316 (1) Read Parameter via Fieldbus 2	0 to 999 [0] -	☑ This parameter allows selecting the number of the second parameter, which content will be sent from the Soft-Starter SSW-06 to the Master of the Fieldbus network. ☑ For more details, refer to the Soft-Starter SSW-06 Fieldbus Communication Manual.
P317 (1) Read Parameter via Fieldbus 3	0 to 999 [0] -	☑ This parameter allows selecting the number of the third parameter, which content will be sent from the Soft-Starter SSW-06 to the Master of the Fieldbus network. ☑ For more details, refer to the Soft-Starter SSW-06 Fieldbus Communication Manual.

6.5 MOTOR PARAMETERS - P400 to P499

P400 (1) Nominal Motor Voltage	0 to 999 [380] 1V	☑ Set this parameter value according to the motor nameplate and the connection diagram in the terminal box. ☑ The motor protection is based on the content of this parameter.
P401 (1) Nominal Motor Current	0 to 2424 [20] 0.1A	☑ Set this parameter value according to the motor nameplate. ☑ The motor protection against current and the current limit are based on this parameter content. ☛ **NOTES!** 1) To ensure that these protections operate correctly, the nominal motor current must not be lower than 30% of the nominal current of the Soft-Starter SSW-06. 2) The use of motors that operate with load duties lower than 50% of their rated loads are not recommended. 3) Program the nominal current of the motor according to the power supply voltage.
P402 (1) Nominal Motor Speed	400 to 3600 [1780] 1rpm	☑ Set the motor speed according to the motor nameplate data. ☑ The motor speed must be the same as indicated on the motor nameplate, already considering its slip.
P404 (1) Nominal Motor Power	0.1 to 2650 [75] 0.1kW	☑ Set the motor power according to the motor nameplate data. ☑ If the power is in CV or HP, multiply the value by 0.74kW.
P405 (1) Motor Power Factor	0 to 1.00 [0.89] 0.01	☑ Set the Motor Power Factor according to the motor nameplate data.

Parameter	Range [Factory Setting] Unit	Description / Notes
P406 (1) Service Factor	0 to 1.50 [1.00] 0.01	☑ Set the Service Factor according to the motor nameplate. ☑ The current protections are based on the content of this parameter.

6.6 SPECIAL FUNCTION PARAMETERS - P500 to P599

P500 (1)
Braking Methods

0 to 3
[0=Inactive]
-

P500	Action
0	Inactive
1	Reverse Braking
2	Optimal Braking
3	DC-Braking

Table 6.38 *- Braking methods selection*

☑ There are three braking methods implemented in the Soft-Starter SSW-06. These braking methods should be used only when fast stops are necessary.

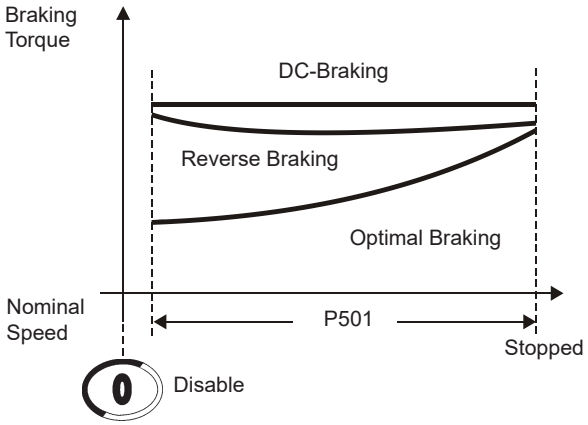

Figure 6.18 *- Braking torque*

"Reverse Braking"

☑ This is an efficient method to stop very high inertia loads.
☑ The motor will stop via AC level voltage in reverse direction until near 20% of the nominal speed when Optimal Braking is applied to stop the motor.
☑ The Reverse Braking AC level and Optimal Braking AC level are set in P502.
☑ Two contactors are needed.
☑ It is compatible with the Soft-Starter SSW-06 inside delta motor connection, except for two and eight pole motors.

Parameter	Range [Factory Setting] Unit	Description / Notes

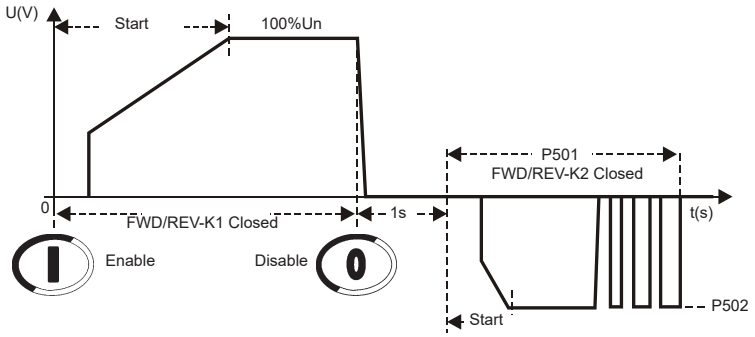

Figure 6.19 *- Reverse Braking*

NOTES!

1. The contactors must be the same model and withstand the motor starting current. For security, use an auxiliary contact to avoid contactors closing at the same time.
2. Use the digital input set to “General Enable” to stop the motor without braking.
3. For security a digital input should be programmed which is wired from a zero speed sensor, and set to “Braking Off”, so that starting the motor in the wrong direction will be avoided.
4. The Soft-Starter SSW-06 protects the motor while the Reverse Braking AC level is applied.
5. See parameters: P266, P267, P268, P277, P278, P500, P501, P502, and P503 and see the recommended setup at items 3.3 and 3.3.9.

“Optimal Braking”

☑ This is an efficient method to stop loads.
☑ The direct current is only applied when it produces a braking effect.
☑ No contactor needed.
☑ It is compatible with the Soft-Starter SSW-06 inside delta motor connection, except for two and eight pole motors.

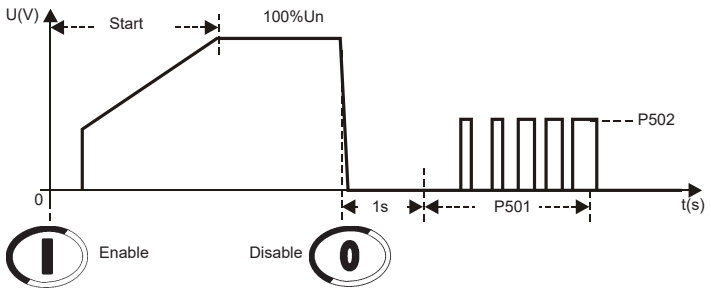

Figure 6.20 *- Optimal Braking*

Parameter	Range [Factory Setting] Unit	Description / Notes

NOTES!

1. Use a digital input set to "General Enable" to stop the motor without braking.
2. Use one digital input set to "Braking Off", for extra safety, for monitoring the real motor standstill and disables the braking immediately.
3. For high inertia loads it is recommended to use a PTC motor input.
4. It is not recommended to use Optimal Braking with two and eight pole motors.
5. See parameters: P266, P267, P268, P500, P501, P502, P503 and see the recommended set-up at items 3.3 and 3.3.10.

"DC-Braking"

☑ This is an old and efficient method to stop very high inertia loads.
☑ The direct current is applied all the time until the motor stops.
☑ One contactor is needed to short-circuit the output lines U and V. The method differs from SSW-03 and SSW-04.
☑ The necessary current to stop the motor is very high and continuously applied.
☑ It is not compatible with the Soft-Starter SSW-06 inside delta motor connection.

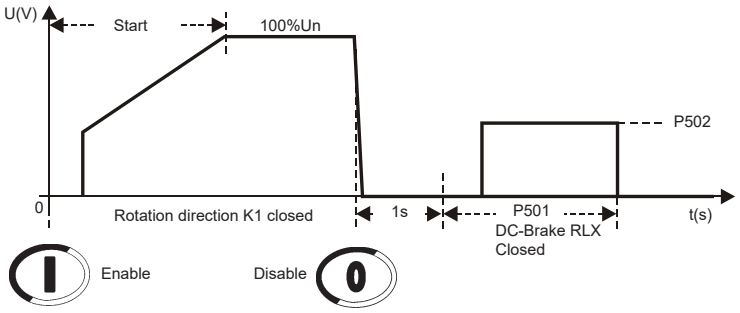

Figure 6.21 *- DC-Braking*

NOTES!

1. Use a digital input set to "General Enable" to stop the motor without braking.
2. Use one digital input set to "Braking Off", for extra safety, for monitoring the real motor standstill and disabling the braking immediately.
3. It is recommended to use a PTC motor input.
4. See parameters: P266, P267, P268, P277, P278, P279, P500, P501, P502, P503 and see the recommended set-up at items 3.3 and 3.3.11.

Parameter	Range [Factory Setting] Unit	Description / Notes
P501 Braking Time	1 to 299 [10] 1s	☑ P501 sets the maximum time that the braking voltage is applied. **ATTENTION!** 1. This is the main protection of all braking methods. Set it according to the application, so that the Soft-Starter SSW-06 and the motor can withstand the settings. 2. The parameters: P001, P002, P003, P008, P009, P010 and P011 are set to zero during Optimal Braking and DC--Braking. 3. The current protections do not work with a DC current because the current transformers saturate with DC current. 4. The Soft-Starter SSW-06 does not protect the motor while it is performing braking, if no motor PTC sensor is used.
P502 Braking Voltage Level	30 to 70 [30] %	☑ P502 sets the braking voltage level. It is based on the AC line voltage converted to DC voltage. ☑ This parameter also sets the level of the AC Reverse Braking. **ATTENTION!** 1. Be careful with this voltage level. Set it according to the application so that the Soft-Starter SSW-06 and the motor can withstand the settings. 2. Start with low voltage levels and increase them according to the need. 3. The current protections do not work with a DC current because the current transformers saturate with DC current. 4. The Soft-Starter SSW-06 does not protect the motor while it is performing the braking, if no motor PTC sensor is used. 5. To measure this current during braking you need a special current meter with hall effect transformers.
P503 Braking End Detection	0 to 1 [0=Inactive] -	P503 | Description 0 | Inactive 1 | Automatic ***Table 6.39*** *- Braking end detection* ☑ This parameter sets the automatic detection of the motor standstill. **NOTES!** 1. This function does not work with two and eight pole motors. 2. This function does not work with inside delta motor connections. 3. The motor standstill detection can vary with the motor temperature. 4. Always use the braking time (P501) as the main protection.

Parameter	Range [Factory Setting] Unit	Description / Notes
P510 (1) Jog	0 to 1 [0=Inactive] -	

P510	Action
0	Inactive
1	Active

Table 6.40 *- Jog selection*

☑ This parameter enables the fixed slow speed with Jog.
☑ Slow speed with Jog forward direction is about 1/7 of the nominal speed.
☑ Slow speed with Jog reverse direction is about 1/11 of the nominal speed.

P510	P231	Action
0 Inactive)	-	without Jog
1 (Active)	0 (Inactive)	allows the slow speed with Jog only in forward direction.
1 (Active)	1 (By Contactor)	allows the slow speed with Jog in the same direction of the power supply and the auxiliary contactors connected at the input power supply, changing the motor direction of rotation.
1 (Active)	2 (JOG Only)	allows the slow speed with Jog in both forward and reverse directions without contactors.

Table 6.41 *- Jog and motor direction of rotation*

P511 Jog Level	10 to 100 [30] 1%	☑ This parameter sets the slow speed torque level with Jog.

ATTENTION!

1. Be careful with this torque level. Set it according to the application so that the Soft-Starter SSW-06 and the motor can withstand the settings.
2. The motor can be enabled during a short period of time only, with Jog. Connect a push-button to a digital input to enable the Jog.
3. The P102 parameter is the time limit protection of the Jog. If this time is exceeded, fault E62 will appear.
4. The parameters: P001, P002, P003, P008, P009, P010 and P011 are set to zero during the Jog Function.
5. The current protections do not work with the Jog current because the current transformers saturate with the low Jog frequency.
6. The Soft-Starter SSW-06 does not protect the motor during a Jog without the use of a PTC sensor on the motor.
7. To correctly measure the currents during the Jog, it is necessary to use hall effect transformers.

Parameter	Range [Factory Setting] Unit	Description / Notes
P520 (1) Kick Start Torque Pulse	0 to 1 [0=Inactive] -	☑ The Soft-Starter SSW-06 allows for the use of a torque pulse during the starting process for loads that have high resistance during the starting process. ☑ Enabled through P520=1. The duration of this pulse may be adjusted at P521. ☑ This pulse will be applied according to the type of control selected at P202: - Voltage ramp: the voltage level may be set at P522. - Current limit: the current level may be set at P523. - Current ramp: with adjustable current level at P523. **NOTES!** 1) Use this function only for specific applications, when required. 2) This function is not required for Torque Control.
P521 Kick Start Pulse Time	0.1 to 2 [0.1] 0.1s	
P522 Kick Start Voltage Pulse Level	70 to 90 [70] 1 %Un of the motor	
P523 Kick Start Current Pulse Level	300 to 700 [500] 1 %In of the motor	

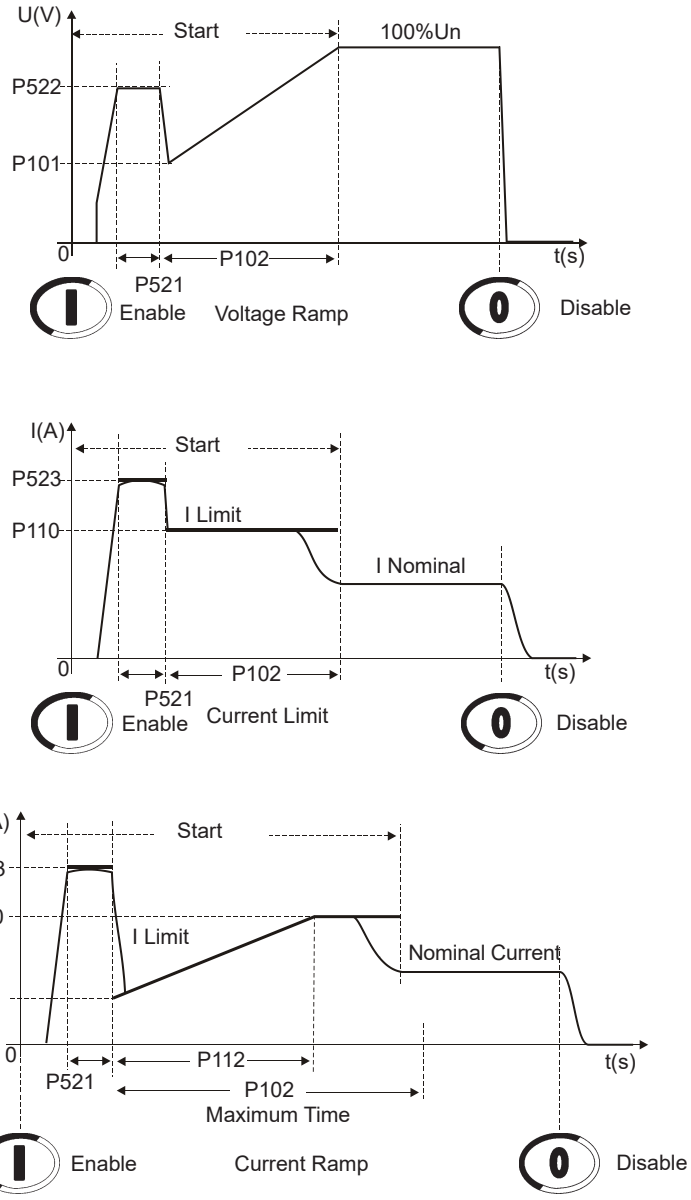

Figure 6.22 *- Actuation levels of the starting torque pulse*

6.7 PROTECTION PARAMETERS - P600 to P699

Parameter	Range [Factory Setting] Unit	Description / Notes
P600 (1) Immediate Undervoltage **P601** (1) Immediate Undervoltage Time **P602** (1) Immediate Overvoltage **P603** (1) Immediate Overvoltage Time	0 to 30 [20] 1 %Un of the Motor 0 to 99 [1] 1s 0 to 30 [15] 1 %Un of the Motor 0 to 99 [1] 1s	☑ The under and overvoltage are settings as percentage of the motor nominal voltage (P400). ☑ P600 sets the immediate undervoltage level at which the motor can operate without problems during the time adjusted in P601. After this time has elapsed the Soft-Starter is disabled indicating undervoltage fault. ☑ P602 sets the maximum overvoltage level that the motor allows, for the time that has been set at P603. If this time is exceeded, the Soft-Starter is disabled and an Overvoltage Error is displayed. ☑ For programming examples refer to the item 7.2.2. **NOTE!** These functions are active for the entire time that the motor is running.

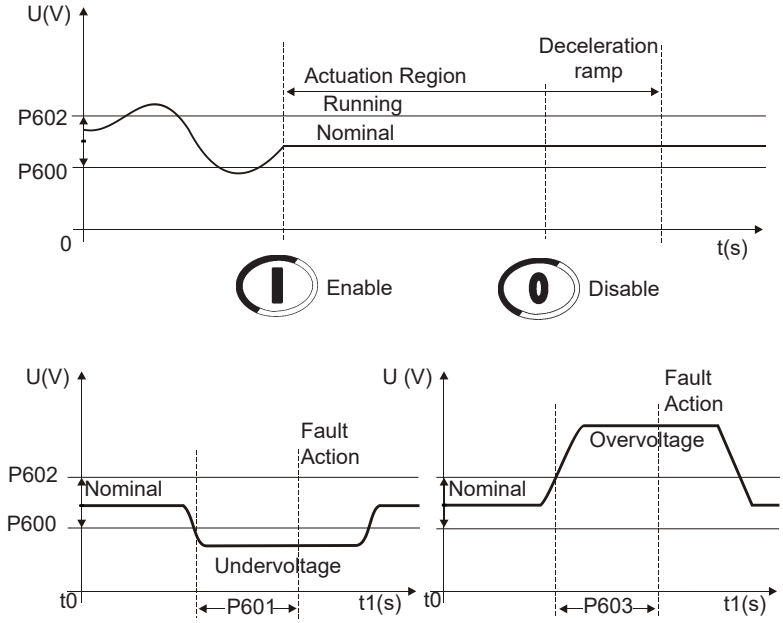

***Figure 6.23** - Actuation levels in case of undervoltage and overvoltage*

P604 (1) Voltage Imbalance between Phases **P605** (1) Voltage Imbalance between Phases Time	0 to 30 [15] 1%Un of the Motor 0 to 99 [1] 1s	☑ Voltage Imbalance between phases is set as a percentage of the nominal motor voltage (P400). ☑ P604 sets the maximum voltage difference between the three line phases at which the motor can operate without problems, for the time set at P605. If these values are exceeded, the Soft-Starter is switched Off and the Voltage Imbalance error is displayed. ☑ These settings also activate the phase fault protection during the starting process and during operation at full voltage. **NOTE!** This function is always active when the motor is running.

Parameter	Range [Factory Setting] Unit	Description / Notes
P610 (1) Immediate Undercurrent **P611** (1) Immediate Undercurrent Time **P612** (1) Immediate Overcurrent **P613** (1) Immediate Overcurrent Time	0 to 99 [20] 1%In of the Motor 0 to 99 [0=Inactive] 1s 0 to 99 [20] 1%In of the Motor 0 to 99 [0=Inactive] 1s	☑ The undercurrent and the overcurrent parameters are set as percentage of the nominal motor current (P401). ☑ P610 sets the immediate undercurrent level at which the motor can operate without problems during the time adjusted in P611. After this time has elapsed the Soft-Starter is disabled indicating undercurrent fault. This function is generally used in applications with hydraulic pumps which cannot be operated without a load. ☑ P612 sets the maximum overcurrent levels that the motor or Soft--Starter allows for the time set at P613, after which the Soft-Starter is switched Off and the Overcurrent Error is displayed. ☑ For programming examples refer to the item 7.2.2. **NOTE!** These Functions are only active after the motor start and after full voltage level has been reached. 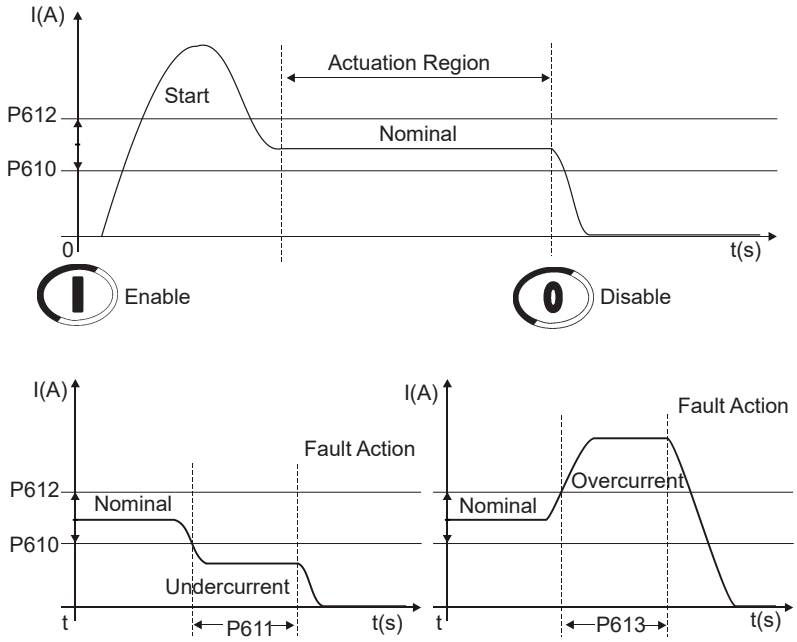 ***Figure 6.24*** *- Actuation Levels for Overcurrent and Undercurrent*
P614 (1) Current Imbalance between Phases **P615** (1) Current Imbalance between Phases Time	0 to 30 [15] 1 %In of the Motor 0 to 99 [1] 1s	☑ The current imbalance values are set as percentage of the nominal motor current (P401). ☑ P614 sets the maximum current difference between the three motor phases at which the motor can operate without problems, for the time set at P615. If these values are exceeded, the Soft-Starter is switched Off and the Current Imbalance error is displayed. ☑ These settings also activate the phase fault protection during the starting process and during operation at full voltage. **NOTE!** This function is actuated only after motor start and after full voltage level has been reached.

Parameter	Range [Factory Setting] Unit	Description / Notes
P616 (1) Undercurrent Before By-pass Closing	0 to 1 [1=Active] -	☑ This function, when enabled, ensures protection against undercurrent before By-pass closing and preventing By-pass closing in case of any supply line fault of any thyristor. ☑ When this function is disabled, the motor can be started with nominal current lower than 10% of the nominal Soft-Starter current. ☛ **NOTE!** This function should be disabled only when motors with low currents are tested.
P617 (1) Locked Rotor at the Start End	0 to 1 [1=Active] -	☑ When this function is enabled it ensures protection against locked rotor at the end of the start and it prevents the By-pass closing when an overcurrent two times the nominal motor current is detected. ☛ **NOTE!** Disable this function only when the motor can withstand loads with higher currents.
P618 (1) Ground Fault **P619** (1) Ground Fault Time	10 to 30 [20] 1% In of the SSW 0 to 10.0 [0=Inactive] 0.1s	☑ The ground fault values are adjusted in percentage of the Soft-Starter nominal current. ☑ P618 adjusts the maximum instantaneous value of current imbalance at which the motor can operate without problems during the time adjusted in P619. After this time has elapsed the Soft-Starter is disabled indicating ground fault E11. ☑ This protection works only during full voltage operation. ☛ **NOTE!** This protection does not replace earth fault relays that are normally used for human life protection and have low trip levels.
P620 (1) RST Phase Sequence	0 to 1 [0=Inactive] -	☑ The function of this parameter is to protect loads that can be run only in one direction of rotation. When this function is enabled, only the phase sequence R/1L1, S/3L2, T/5L3 is permitted. ☑ When this function is enabled, the phase sequence is detected every time the motor is powered-up. ☑ The function is very useful for driving hydraulic pumps which can be operated only in one direction of rotation.
P621 (1) By-pass Contactor Closed	0 to 1 [1=Active]	☑ Its function is to indicate imperfection in the opening of the by-pass contactor when the motor has been switch off, indicating By-pass Contactor Closed fault E77. The fault is indicated with by-pass internal or external. ☛ **NOTE!** Disable this protection only to make possible the use of the SSW-06 in multimotor applications, that is, when a SSW-06 starts more than a motor.
P622 (1) Short circuit in the SSW power	0 to 1 [0 = Inactive]	Its function is to protect the motor when a short circuit occurs in the power circuit of the SSW-06 Soft-Starter, thyristors or by-pass with the motor stopped, that is, without the Run command. ☛ **NOTE!** This protection will only be actuated through contactor (K1) or circuit breaker (Q1) of the power isolation (Item 3.3), and it is

Parameter	Range [Factory Setting] Unit	Description / Notes
		deactivated by the error output.
P630 Interval of Time After Stop	2 to 999 [2] 2s	☑ This function limits the minimum time interval to a new start after the motor has been switched Off. **NOTE!** The behavior of this function has changed, if compared to the software versions that preceded the V1.40. Now the time interval starts after power is removed from the motor.

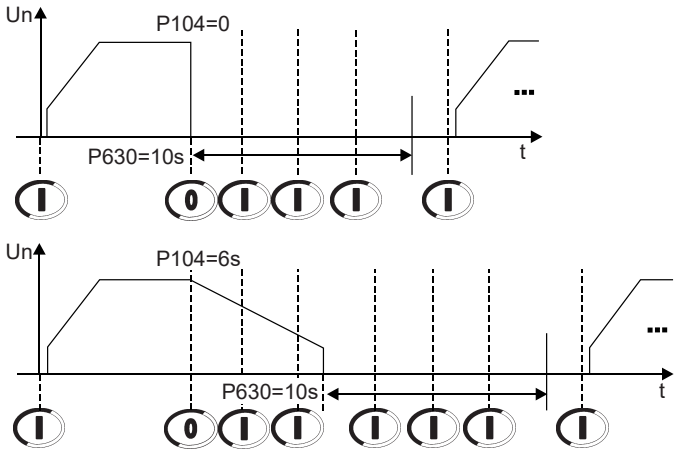

Figure 6.25 - Operation via keypad I and 0 .

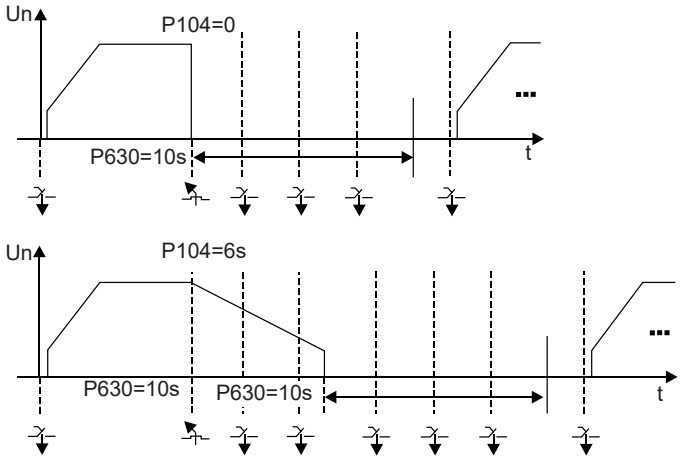

Figure 6.26 - Operation via three-wire digital inputs (DI1 and DI2)

Parameter	Range [Factory Setting] Unit	Description / Notes

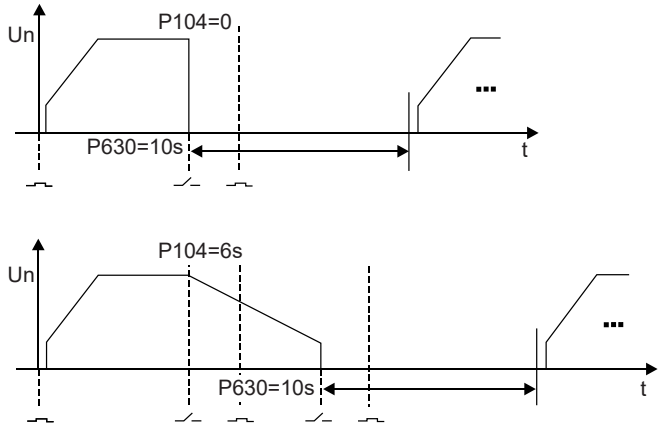

Figure 6.27 *- Operation via digital input (DI1)*

NOTE!
The start command will be executed only after the time interval programmed at P630 has elapsed.

NOTES!
1) The time interval starts to be counted at the moment when the motor switch Off command is given, if a deceleration ramp has been programmed or not.
2) This function is only active when the time interval, which has been set at P630, is longer than the time set at P104 for the deceleration process, if programmed.
3) If the control board supply is removed, or if the microcontroller is reset, no time counting occurs.

P640 (1)
Motor Protection
Thermal Class

0 to 9
[6=30]
1

P640	Action
0	Inactive
1	Class 5
2	Class 10
3	Class 15
4	Class 20
5	Class 25
6	Class 30
7	Class 35
8	Class 40
9	Class 45

Table 6.42 *- Thermal classes*

☑ The Soft-Starter SSW-06 has a rigid thermal protection that is efficient and totally programmable for the protection of your motor. All Soft-Starter SSW-06 models are fitted with this protection device. When activated, error E05 (overload) will be displayed and the motor will be switched off.
☑ This thermal protection has curves that simulate the motor heating and cooling. The calculation is executed by complex Software, that estimates the motor temperature through True RMS current supplied to the motor.
☑ The actuation curves of the Thermal Protection are based on IEC 60947-4-2 standard.

Parameter	Range [Factory Setting] Unit	Description / Notes

☑ The heating and cooling curves are based on WEG's extensive experience with motor development. These curves adopt WEG three-phase IP55 standard motors. They also consider if the motor is force cooled or not when driven.

☑ The cooling time of the thermal image depends on the motor power, which means that each different power rating will have different cooling times. When reduction of this cooling time is required, you can use P641.

☑ The estimated motor temperature is saved in non-volatile memory every time the power supply of the control board is switched off. Thus, when the control board is switched on again, the last value saved will return.

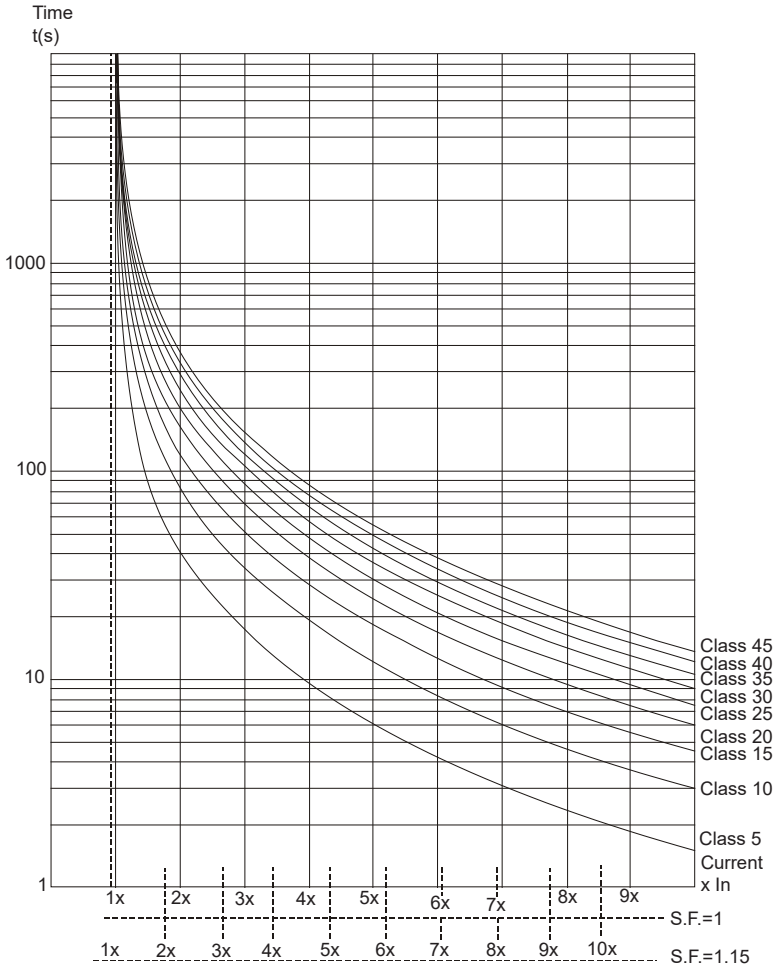

Figure 6.28 *- Thermal protection classes for cold motor*

Class	40	30	20	10
3xIn	135s	101.2s	67.5s	33.7s
5xIn	48.1s	36.1s	24s	12s
7xIn	24.5s	18.3s	12.2s	6.1s

Table 6.43 *- Thermal protection class times for cold motor with S.F.=1*

Class	40	30	20	10
3xIn	180.2s	135.1s	90.1s	45.1s
5xIn	63.6s	47.7s	31.8s	15.9s
7xIn	32.4s	24.3s	16.2s	8.1s

Table 6.44 *- Thermal protection class times for cold motor with S.F.=1.15*

Parameter	Range [Factory Setting] Unit	Description / Notes

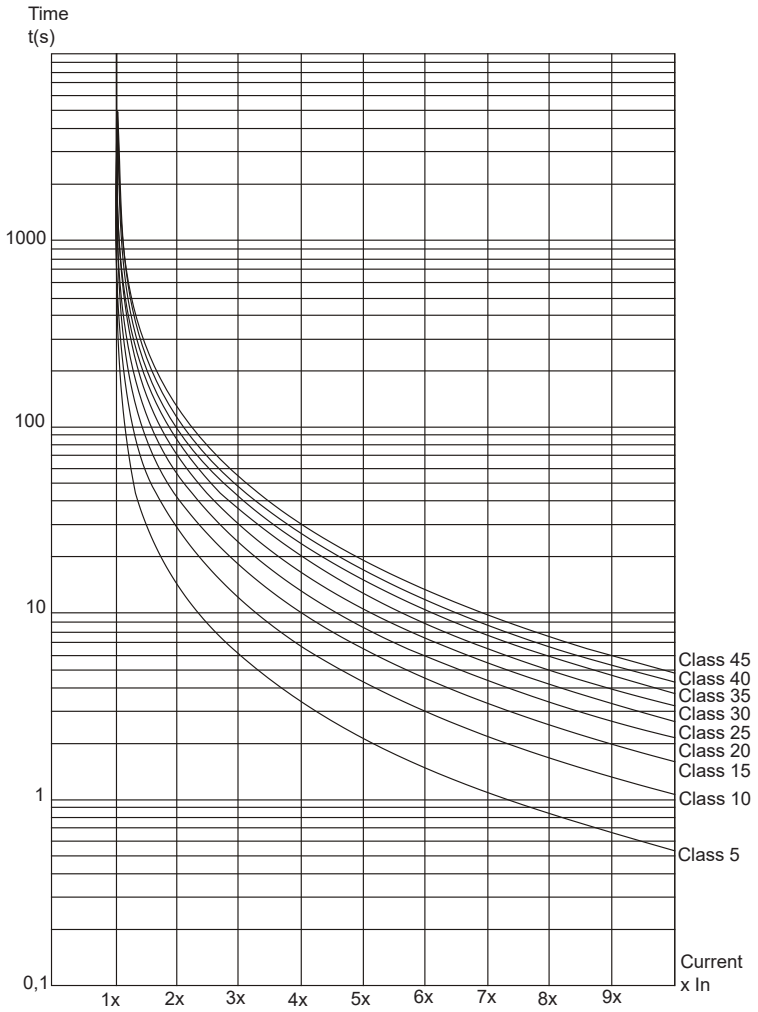

Figure 6.29 *- Thermal protection classes for hot motor with 100% In*

Class	40	30	20	10
3xIn	47.2s	35.4s	23.6s	11.8s
5xIn	16.8s	12.6s	8.4s	4.2s
7xIn	8.5s	6.4s	4.2s	2.1s

Table 6.45 *- Thermal protection class times for hot motor*

Current in % of In of the Motor	Factor
0%(cold)	1
20%	0.87
40%	0.74
60%	0.61
80%	0.48
100% (rated load)	0.35

Table 6.46 *- Multiplication factor of the cold thermal classes time to obtain hot thermal class times*

Parameter	Range [Factory Setting] Unit	Description / Notes
		NOTE! As there are several Thermal Protection Classes, you must program that Thermal Protection Class that best meets your application and protects the motor during its allowed duty. **NOTE!** The SSW-06 Soft-Starter thermal class times are an evolution of the previous WEG Soft-Starters, therefore the times are different to those of the SSW-03 and SSW-04. The class to be adopted must be in accordance with the SSW-06 graphs. **NOTE!** When using a motor with a PTC thermal sensor or thermostat connected to the SSW-06 Soft-Starter, there is no need to enable the Thermal Classes, therefore set P640=0.
P641 (1) Auto-Reset of the Thermal Memory	0 to 600 [0=Inactive] 1s	☑ Sets the time for the auto-reset of the thermal image of the motor. ☑ This function can be used for applications that require several starts per hour or those with short intervals of time between starting and stopping the motor. ☑ The motor cooling curves are based on many years of experience of WEG developing motors. They adopt the Standard IP55 Three Phase Motors with temperature elevation of 60K as a standard. They also consider if the motor is cool when switched on or not. ☑ The thermal image cool time depends on the power of the motor, in other words, for each power rating there is a different cooling time. ☑ The thermal image can also be reset if parameter P640=0 is programmed, returning to the desired Thermal Class afterwards. 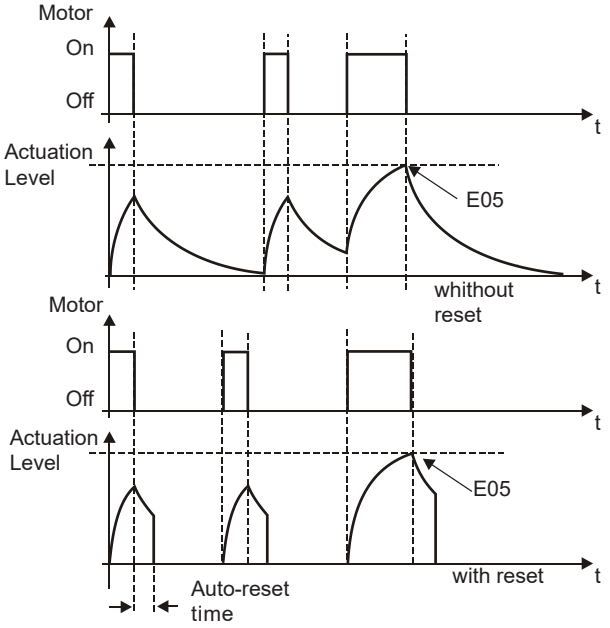 ***Figure 6.30*** *- Auto-reset of the thermal memory* **NOTE!** Please consider, that when using this function, the useful life time of the motor winding can be reduced.

Parameter	Range [Factory Setting] Unit	Description / Notes
P642 Motor Thermal Protection Alarm **P643** Motor Thermal Protection Alarm Reset	0 to 250 [230] 1% 0 to 250 [210] 1%	☑ This function allows setting levels for a motor thermal protection alarm. ☑ P642 sets the alarm level for the motor thermal protection. ☑ P643 sets the reset level for the motor thermal protection alarm. ☑ In order that this function works, P705 (Motor Thermal Protection Trip) must be set to 1 (Alarm) or 2 (Fault and Alarm). **NOTE!** The alarm level adjusted in P642 must be higher than the reset level adjusted in P643. 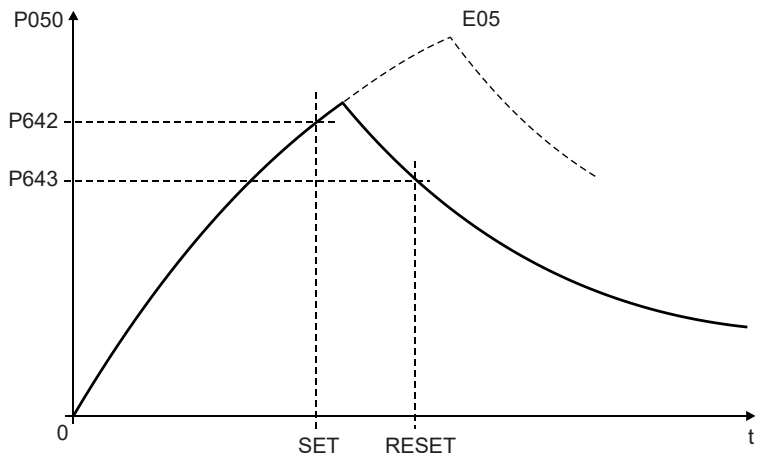 ***Figure 6.31*** *- Motor thermal protection alarm programming*
P650 (1) Immediate Undertorque **P651** (1) Immediate Undertorque Time **P652** (1) Immediate Overtorque **P653** (1) Immediate Overtorque Time	0 to 99 [30] 1% Tn of the Motor 0 to 99 [0=Inactive] 1s 0 to 99 [30] 1% Tn of the Motor 0 to 99 [0=Inactive] 1s	☑ The Overtorque and Undertorque values are adjusted in percentage of the motor nominal torque (100%). ☑ P650 sets the immediate Undertorque level at which the motor can operate during the time adjusted in P651. After this time has elapsed the Soft-Starter is disabled indicating Undertorque fault. This function can be used in applications with hydraulic pumps that cannot operate without load. ☑ P652 sets the immediate Overtorque level at which the motor can operate during the time adjusted in P653. After this time has elapsed the Soft-Starter is disabled indicating Overtorque fault. ☑ For programming examples see the item 7.2.2. **NOTE!** These functions work only with full voltage, after the motor has been started.

Parameter	Range [Factory Setting] Unit	Description / Notes
		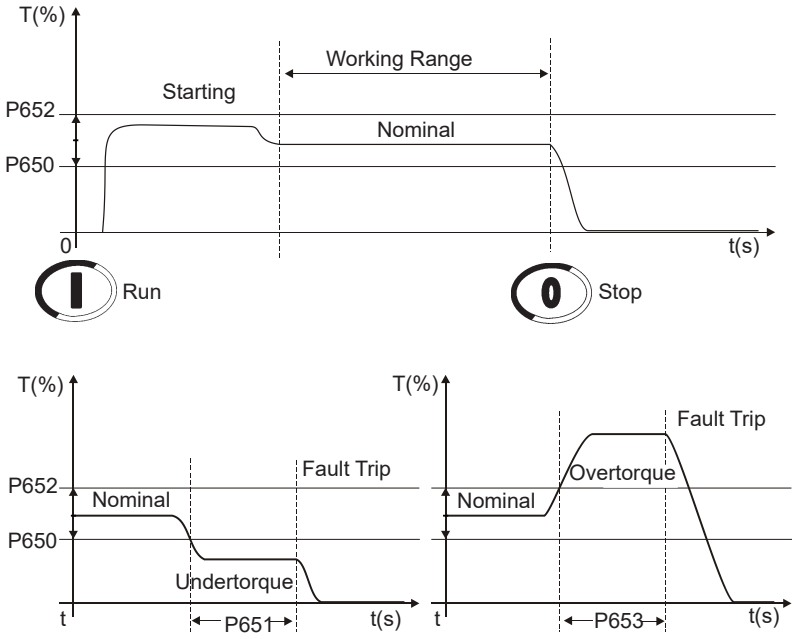 ***Figure 6.32*** *- Trip levels for Overtorque and Undertorque*
P660 (1) Immediate Underpower **P661** (1) Immediate Underpower Time **P662** (1) Immediate Overpower **P663** (1) Immediate Overpower Time	0 to 99 [30] 1% Pn of the Motor 0 to 99 [0=Inactive] 1s 0 to 99 [30] 1% Pn of the Motor 0 to 99 [0=Inactive] 1s	☑ The Overpower and Underpower values are adjusted in percentage of the nominal motor power (P404). ☑ P660 sets the immediate Underpower level at which the motor can operate during the time adjusted in P661. After this time has elapsed the Soft-Starter is disabled indicating Underpower fault. This function can be used in applications with hydraulic pumps that cannot operate without load. ☑ P662 sets the immediate Overpower level at which the motor can operate during the time adjusted in P663. After this time has elapsed the Soft-Starter is disabled indicating Overpower fault. ☑ For programming examples see the item 7.2.2. **NOTE!** These functions work only with full voltage, after the motor has been started.
P670 PT100 Inputs Card Enable	0 to 1 [0=No] -	☑ This parameter enables motor temperature inputs board (optional kit K-PT100). P670 | Description 0 | No 1 | Yes ***Table 6.47*** *- Motor temperature inputs board enable* **NOTE!** If it uses this motor temperature inputs board it cannot be used the fieldbus communication board (kits KFB) or digital inputs and outputs expansion board (K-IOE).

Parameter	Range [Factory Setting] Unit	Description / Notes
P671 Motor Overtemperature Ch1 **P675** Motor Overtemperature Ch2 **P679** Motor Overtemperature Ch3 **P683** Motor Overtemperature Ch4 **P687** Motor Overtemperature Ch5	0 to 3 [0=Inactive] -	☑ It programs the way of functioning of the protection of overtemperature of the motor for each channel of temperature.

P671	Description
0	Inactive
1	Error E33
2	Alarm A33
3	Error E33 and Alarm A33

Table 6.48 *- Functioning selection Ch1*

P675	Description
0	Inactive
1	Error E34
2	Alarm A34
3	Error E34 and Alarm A34

Table 6.49 *- Functioning selection Ch2*

P679	Description
0	Inactive
1	Error E35
2	Alarm A35
3	Error E35 and Alarm A35

Table 6.50 *- Functioning selection Ch3*

P683	Description
0	Inactive
1	Error E36
2	Alarm A36
3	Error E36 and Alarm A36

Table 6.51 *- Functioning selection Ch4*

P687	Description
0	Inactive
1	Error E37
2	Alarm A37
3	Error E37 and Alarm A37

Table 6.52 *- Functioning selection Ch5*

☑ The not used channels must be programmed for 0 (Inactive). The channels programmed for 0 (inactive) indicate zero degrees Celsius in the corresponding parameter, of P091to P095.

☑ In the overtemperature actuation, if the protection is programmed for error, the motor will be turn off and will be indicated the message of error in the HMI. In case that it is programmed for alarm, the motor continues running and will be indicated the message of alarm in the display of the HMI. The third possibility is the use of the two options, error and alarm.

Parameter	Range [Factory Setting] Unit	Description / Notes
P672 Motor Overtemperature Error Actuation Level Ch 1 **P676** Motor Overtemperature Error Actuation Level Ch 2 **P680** Motor Overtemperature Error Actuation Level Ch 3 **P684** Motor Overtemperature Error Actuation Level Ch 4 **P688** Motor Overtemperature Error Actuation Level Ch 5	0 to 250 [139] ºC	☑ It programs the maximum level of temperature that the motor can operate without problems. Normally a value 10% below of the insulation class of the motor is used. ☑ If the motor temperature exceed the programmed level and the corresponding channel is programmed for error, the motor will be turn off and will be indicated error message in the display of the HMI.
P673 Motor Overtemperature Alarm Actuation Level Ch1 **P677** Motor Overtemperature Alarm Actuation Level Ch2 **P681** Motor Overtemperature Alarm Actuation Level Ch3 **P685** Motor Overtemperature Alarm Actuation Level Ch4 **P689** Motor Overtemperature Alarm Actuation Level Ch5	0 to 250 [124] ºC	☑ It programs the level of the motor overtemperature alarm actuation. Normally a value 20% below of the insulation class of the motor is used. ☑ If the motor temperature exceed the programmed level and the corresponding channel is programmed for alarm, the motor continues running and will be indicated alarm message in the display of the HMI. ☛ **NOTE!** The value programmed for the motor overtemperature alarm actuation must be bigger that the value programmed for reset of the alarm.

Parameter	Range [Factory Setting] Unit	Description / Notes
P674 Motor Overtemperature Alarm Reset Level Ch1 **P678** Motor Overtemperature Alarm Reset Level Ch2 **P682** Motor Overtemperature Alarm Reset Level Ch3 **P686** Motor Overtemperature Alarm Reset Level Ch4 **P690** Motor Overtemperature Alarm Reset Level Ch5	0 to 250 [108] ºC	☑ It programs the level of motor overtemperature alarm reset. Normally a value 30% below of the insulation class of the motor is used. ☑ If the motor overtemperature alarm is active and the motor temperatura value is lower than the reset level, the indication of the alarm will be removed. **NOTE!** The value programmed for motor overtemperature alarm reset must be lower that the value programmed for alarm actuation level.
P691 PT100 Sensors Fault (Ch1 to Ch5)	0 to 2 [0=Inactive] -	☑ It programs the way of functioning of the verification of problems in the temperature sensors. This function detects sensor in short circuit or with broken cable. P691 / Description 0 / Inactive 1 / Error E43 to E52 2 / Alarm A43 to A52 ***Table 6.53*** *- Fault sensor action selection* ☑ In case of problem in some temperature sensor, if P691 is programmed for error, the motor will be turn off and will be indicated the error message in the HMI. In case that it is programmed for alarm, the motor continues running and will be indicated the message of alarm in the display of the HMI.

6.8 SELECTION BETWEEN FAULT AND ALARM - P700 to P790

P705 Motor Thermal Protection Trip	0 to 2 [0=Fault E05] 1	P705 / Description 0 / Fault E05 1 / Alarm A05 2 / Fault and alarm ***Table 6.54*** *- Selection between fault and alarm of the motor thermal protection* ☑ It allows selecting the protection trip between Fault and Alarm. ☑ The Fault trips disabling the motor when the thermal protection reaches the maximum level (250%). It only leaves this condition through the Reset. This condition can be indicated via digital output.

Parameter	Range [Factory Setting] Unit	Description / Notes
		☑ The Alarm is only an indication and does not disable the motor. It is showed on the display when the motor thermal protection level exceeds the value adjusted in P642. It leaves this condition automatically when the thermal protection level gets below the value adjusted in P643. This situation can be indicated via digital output.
P706 Open DIx Protection Trip	0 to 1 [0= Fault E06] 1	
P716 Line Overvoltage Trip	0 to 1 [0= Fault E16] 1	
P732 Motor Overtemperature – PTC – Trip	0 to 1 [0= Fault E32] 1	
P765 Motor Undercurrent Trip	0 to 1 [0= Fault E65] 1	
P766 Motor Overcurrent Trip	0 to 1 [0= Fault E66] 1	
P778 Motor Undertorque Trip	0 to 1 [0= Fault E78] 1	
P779 Motor Overtorque Trip	0 to 1 [0= Fault E79] 1	
P780 Motor Underpower Trip	0 to 1 [0= Fault E80] 1	
P781 Motor Overpower Trip	0 to 1 [0= Fault E81] 1	

P706 to P781	Description
0	Fault Exx
1	Alarm Exx

Table 6.55 *- Selection between fault and alarm*

☑ It allows selecting protection trips between Fault and Alarm.
☑ The Fault trips disabling the motor. It only leaves this condition through the Reset. This condition can be indicated via digital output.
☑ The Alarm is only showed on the display. It does not disable the motor. It leaves this condition automatically when the alarm condition is eliminated. This situation can be also indicated via digital output.

6.9 SOFTPLC PARAMETERS - P950 to P999

Parameter	Range [Factory Setting] Unit	Description / Notes
P950 (2) Enable SoftPLC	0 to 1 [0=No] 1	☑ It allows enabling the execution of the user applicative software. ☑ Refer to the WLP manual for more information.
P951 Digital Inputs and Outputs Expansion Card Enable	0 to 1 [0=No]	☑ Its function is to enable the digital inputs and outputs expansion board of the kit K-IOE (see chapter 9). This card only can be used through of the SoftPLC.
P952 a P969 SoftPLC User Parameters	0 to 65535 [0] 1	☑ They are disposed sequentially from P952 to P969. ☑ These parameters are available for the SoftPLC user to apply them as reading or writing variables of the applicative software. ☑ Refer to the SSW-06 SoftPLC manual for more details.

P950	Description
0	No
1	Yes

Table 6.56 *- Enables the SoftPLC execution*

P951	Description
0	No
1	Yes

Table 6.57 *- Digital inputs and outputs expansion board enable*

NOTE!
If it uses this digital inputs and outputs expansion board it cannot be used the fieldbus communication cards (kits KFB).

PROGRAMMING INFORMATION AND SUGGESTIONS

This Chapter is useful for setting and programming the start control type according to the application.

7.1 APPLICATIONS AND PROGRAMMING

ATTENTION!
Important information about each start control type.

ATTENTION!
For correct parameter setting you must consider the load data and use Sizing software WEG - SDW, available at WEG Site (http://www.weg.net).
If this software can not be used, you can follow some practical concepts described below:

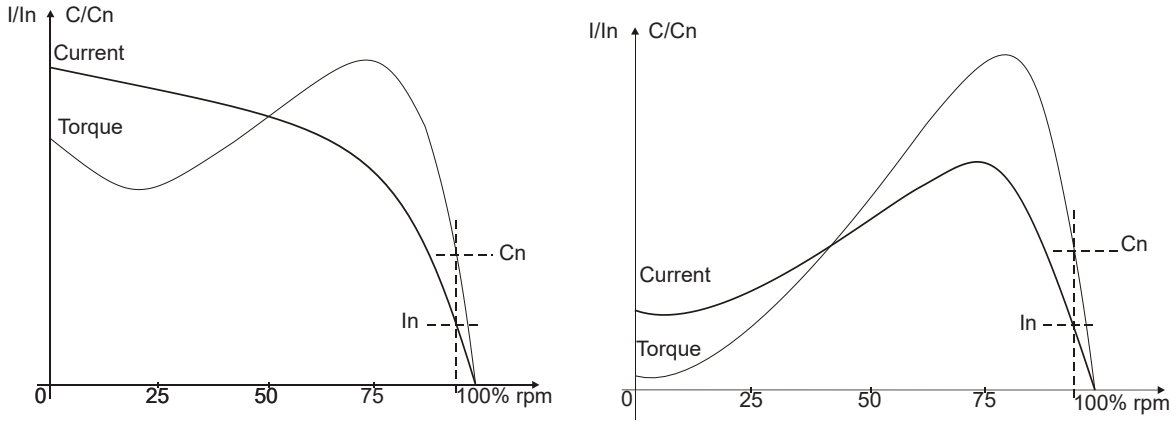

***Figure 7.1** – Characteristic torque and current curve in a direct on-line start and by Voltage Ramp*

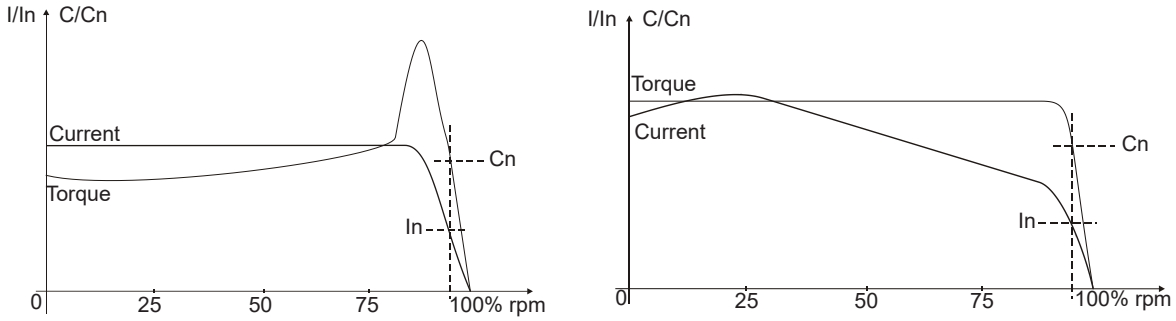

***Figure 7.2** - Characteristic torque and current curves during a start with Current Limit and Torque Control*

Below are shown some characteristic curves with the starting torque behavior of some load types and the recommended type of control to be used.

Load Type	Type of Control	Load Type	Type of Control
Alternative Pumps 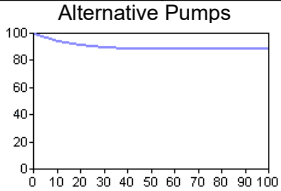	3 Point Torque Control	Screw Compressors 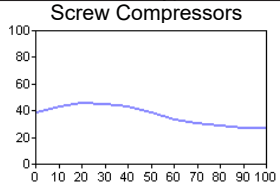	3 Point Torque Control Current Limit + K.Starter
Conveyor Belt 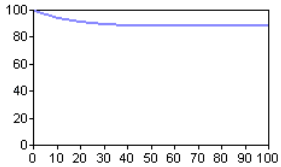	3 Point Torque Control Current Limit + K.Starter	Axial Fans 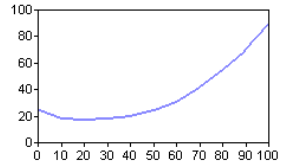	Current Limit Current Ramp 2 Point Torque Control 3 Point Torque Control
Extruders Vertical Sand Mills Wood Peeler 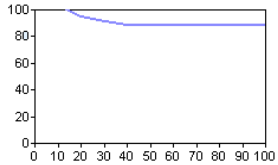	3 Point Torque Control Current Limit + K.Starter	Centrifugal Fans Exhaust 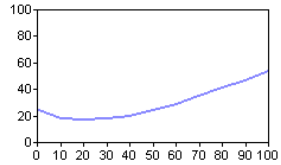	Current Limit Current Ramp
Piston Vacuum Pump Piston Compressors 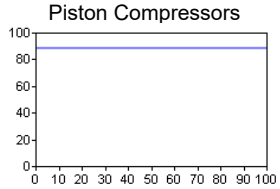	Constant Torque Control	Centrifugal Pumps Vane Vacuum Pump 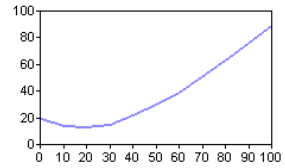	Pump Control 2 Point Torque Control 3 Point Torque Control
Crushers Wood Peeler 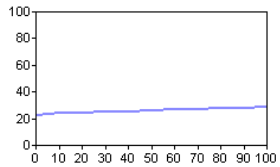	Current Limit Current Ramp	Submersible Centrifugal Pumps 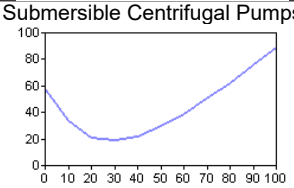	3 Point Torque Control
Centrifuges Hammer Mills 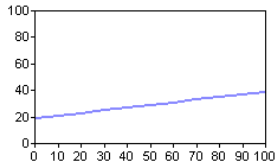	Current Limit 2 Point Torque Control	Ball Mill – Ceramics 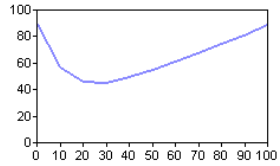	Current Ramp + K.Starter Current Limit + K.Starter
Barley – Starch Processing Wood Chipper 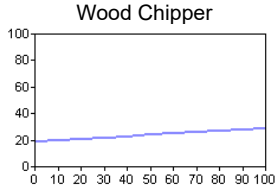	Current Limit Current Ramp	Mixers 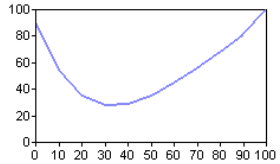	Current Ramp + K.Starter Current Limit + K.Starter
Cellulose Refiners 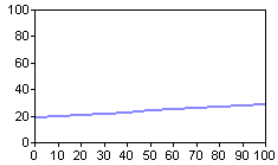	Voltage Ramp		

Table 7.1 *- Typical characteristics of staring torque curves of some load types with suggested types of control*

7.1.1 Starting by Voltage Ramp (P202=0)

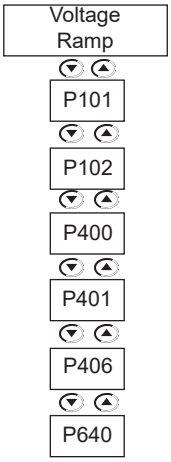

1) Set initial voltage, P101. Set initially to a low value;
2) When load is applied to the motor, set P101 to a value that allows motor running smoothly from enable command;
3) Set P102 to the time required for the motor start. At first set short times, 10 to 15 seconds, afterwards try to find the most suitable starting condition for your load.

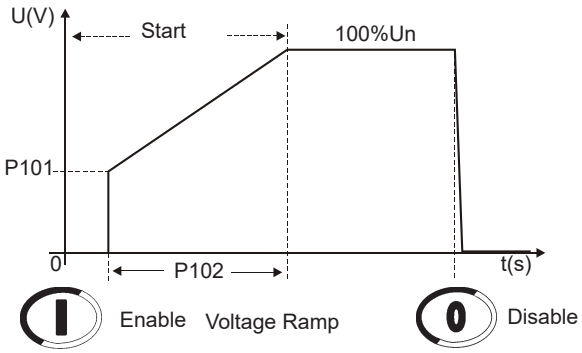

Figure 7.3 *- Starting by Voltage Ramp*

NOTES!

1) Vibrations can occur during the motor start, when long starting times have been set, or motor is starting without load. In this case, decrease the starting time;
2) If errors are detected during the motor start, check all connections of the Soft-Starter to the power line, the motor connections, the voltage levels of the power line, the fuses, circuit-breakers and disconnecting switches.

7.1.2 Starting by Current Limit (P202=1)

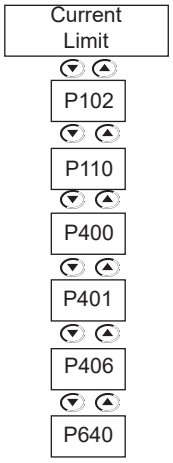

1) To start the motor with a current limit you must apply a load to the motor. No-load tests can be done by voltage ramp;
2) Set P102 to the time required for the start. At first set short times, 20s to 25s. This time will be used as the blocked rotor time, when the motor is unable to start;
3) Set P110 with Current Limit by considering its electrical installation and ensuring sufficient torque for the motor start. Initially you can set 2x to 3x the nominal motor current (In of the motor).

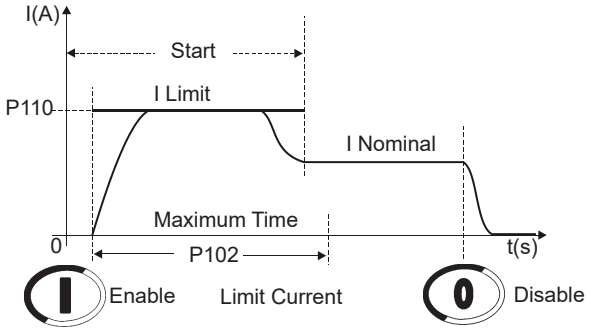

Figure 7.4 *- Starting by constant current limit*

NOTES!

1) If the current limit is not reached during the starting, the motor will reach nominal speed immediately;
2) P401 must be set according to the current of the used motor;
3) A low Current Limit results in too low torque for the motor start. Always mantain the motor running after it has been enabled;
4) For loads requiring a higher initial starting torque, you can use the kick start function, P520, or the current ramp;
5) If errors are detected during the motor start, check all connections of the Soft-Starter to the power line, the motor connections, the voltage levels of the power line, the fuses, circuit-breakers and disconnecting switches.

7.1.3 Starting by Current Ramp with High Initial Current (P202=4)

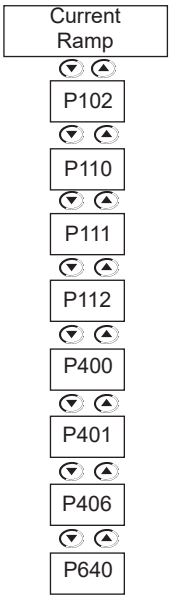

1) For starting the motor with current ramp you must apply load on the motor. No-load tests can be done by voltage ramp;
2) Use this function to help starting loads that require an higher initial torque , as conveyors belt;
3) When such a load is started with fixed current limit, you can note that the motor requires some time to start rotating and then it speeds up quickly;
4) As solution we recommend to set an initial current to overcome the friction and then programming a current limit that maintains the load acceleration till the start end. In this way you certainly will ensure a smooth start;
5) Set P111 to the current value required to start rotating the motor;
6) Set P112 initially to 2s, 10% of P102(20s) = 2s and then increase it gradually;
7) The motor must start rotating as soon as it is enabled;
8) Set P110 with current limit that maintains the motor accelerating.

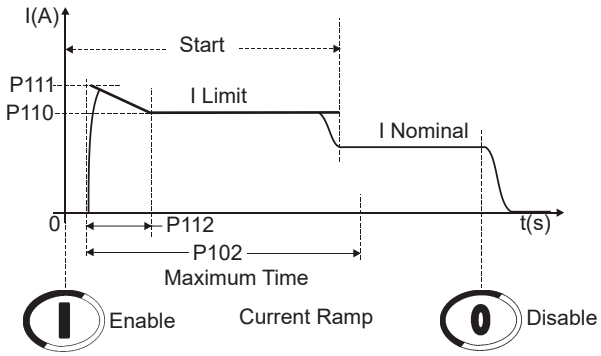

***Figure 7.5** - Starting with current ramp, initial higher current*

NOTES!

1) If the current limit is not reached during the starting, the motor will reach nominal speed immediately;
2) P401 must be set according to the current of the used motor;
3) A low Current Limit results in too low torque for the motor start. Always maintain the motor running after it has been enabled;
4) If errors are detected during the motor start, check all connections of the Soft-Starter to the power line, the motor connections, the voltage levels of the power line, the fuses, circuit-breakers and disconnecting switches.

7.1.4 Starting by Current Ramp with Low Initial Current (P202=4)

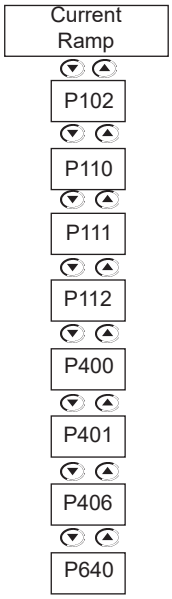

1) To start the motor with current ramp you must apply load on the motor. No-load tests can be done by voltage ramp;
2) Use this function to help starting loads that require a lower initial torque, as fans and blowers;
3) When such a load is started with fixed current limit, you can note that the motor starts accelerating and than stops to accelerate;
4) As solution we recommend setting a lower initial current to only starting rotating and than increase the current limit gradually until the end of the start. In this way you will certainly ensure a smooth start;
5) Set P111 to the current value required to start rotating the motor only;
6) Set P112 initially to 75% of P102(20s) = 15s and then increase it gradually;
7) The motor must start rotating as soon as it is enabled;
8) Set P110 with current limit that maintains the motor accelerating;
9) The motor must accelerate till the start end.

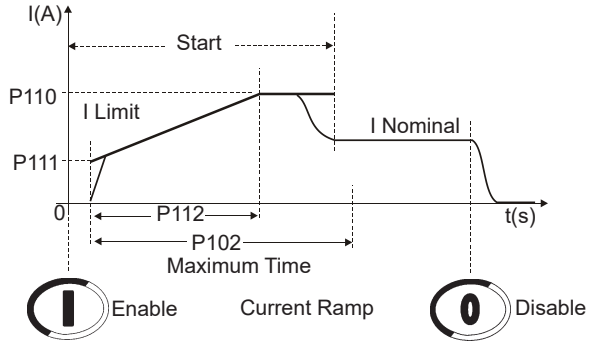

Figure 7.6 *- Starting with current ramp, initial lower current*

NOTES!

1) If the current limit is not reached during the starting, the motor will reach nominal speed immediately;
2) P401 must be set according to the current of the used motor;
3) A low Current Limit results in too low torque for the motor start. Always maintain the motor running after it has been enabled;
4) If errors are detected during the motor start, check all connections of the Soft-Starter to the power line, the motor connections, the voltage levels of the power line, the fuses, circuit-breakers and disconnecting switches.

7.1.5 Starting with Pump Control (P202=2)

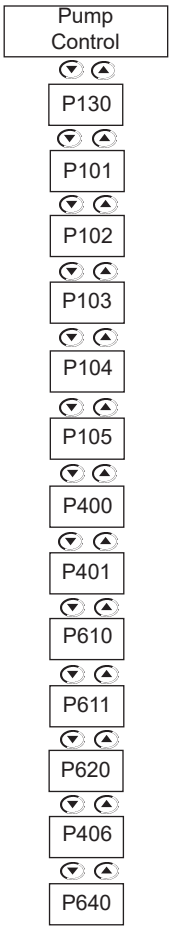

1) To start with pump control a load is necessary. No-load tests can be done with voltage ramp;
2) The starting parameters setting depend mainly on the types of hydraulic installations. Thus we recommend optimizing factory settings, if possible.
3) Check if the motor rotation direction is an indicated on the pump frame. If not, connect the phase sequence as indicated at P620;

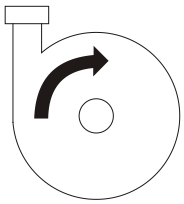

Figure 7.7 *- Direction of rotation of a hydraulic centrifugal pump*

4) Set the initial voltage - P101 – so the motor starts smoothly as soon as it is enabled.
5) Set the acceleration time according to the application, and, that the motor is able to start the load smoothly, but the required acceleration is not exceeded. If acceleration times are set too long, this may result in vibration or harmful motor overheating;
6) To check the correct starting process, always use a manometer in the hydraulic installation. Pressure increase should not result in sudden oscillations. Thus the pressure increase should be as linear as possible;

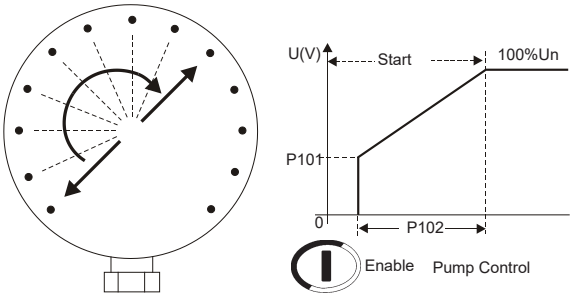

Figure 7.8 *- Manometer showing pressure increase*

7) Program the voltage step during the deceleration only when no pressure drop is detected at the deceleration begin. With this deceleration voltage step you can improve the linear pressure drop during the deceleration;
8) Set the deceleration time according to the application, and, ensuring that the pump stops smoothly within the expected limits. The set of excessively long times may result in vibrations or harmful motor overheating;

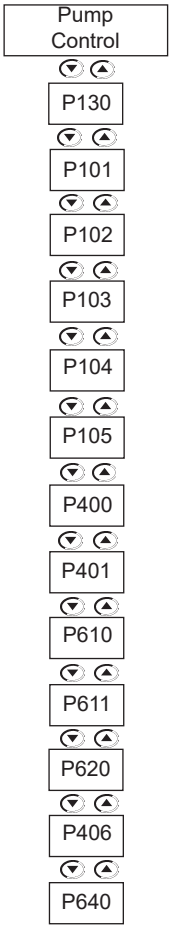

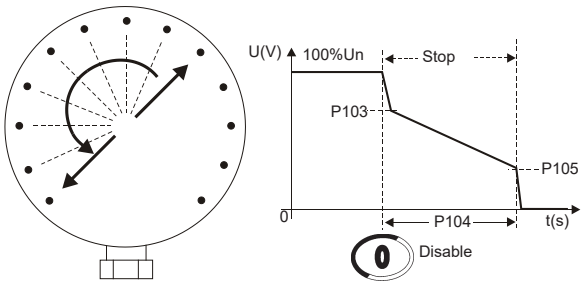

Figure 7.9 *- Manometer showing the pressure drop*

9) Generally, the current increases at the end of the deceleration ramp and in this case the motor requires more torque to achieve a smooth water flow stop. When the motor has already stopped, but is still enabled, the current will increase too much. To prevent this condition, set P105 to a value that as soon it stop it is also disabled;
10) Set P610 and P611 to current and time levels that prevent the hydraulic pump from running without a load.

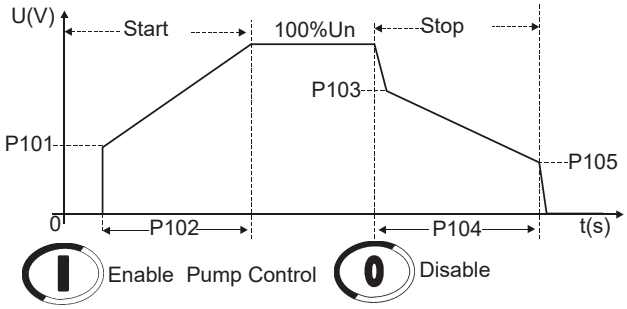

Figure 7.10 *- Start with pump control*

NOTES!

1) P400 and P401 must be set according to the line voltage and the nominal current of the used motor;
2) If the hydraulic piping is not fitted with a manometer, the water hammer can be noted at the pressure relief valves;
3) Please consider, that sudden line voltage drops results in motor torque drops. Thus, ensure that the power supply line characteristics are within the characteristics required for motor operation;
4) If errors are detected during the motor start, check all connections of the Soft-Starter to the power line, the motor connections, the voltage levels of the power line, the fuses, circuit-breakers and disconnecting switches.

7.1.6 Starting with Torque Control (P202=3)

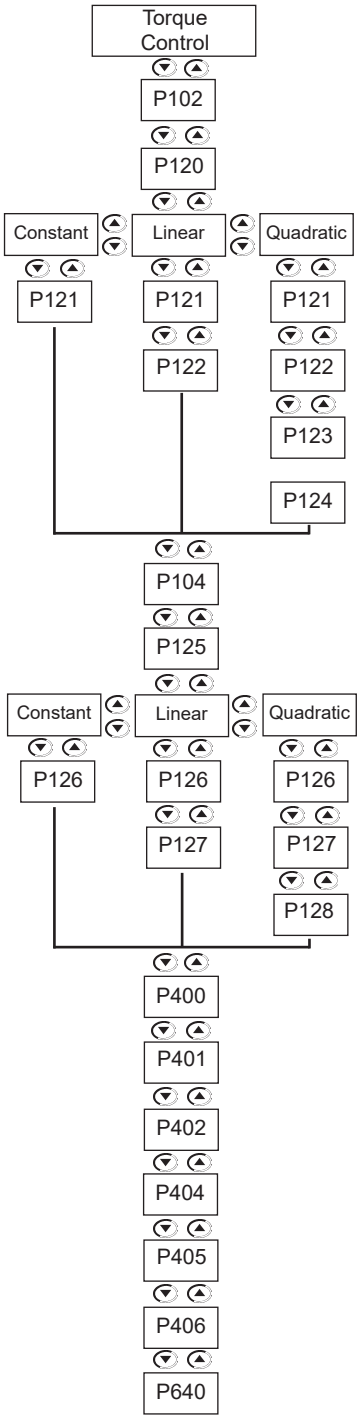

1) The torque control of the Soft-Starter SSW-06 demonstrates excellent performance during motor and load starts;
2) This control is available in a form to facilitate and to adjust the type of control to the type of load;
3) See some recommendations below on how to program and set this type of control.

NOTES!

1) To start with torque control a load is necessary. No-load tests can be done with voltage ramp.

2) If the torque limits are not reached during the start, the motor will start immediately.

3) Only use the control type and/or torque control type you are able to set. Always select the control type that is easier to set, considering the load characteristics;

4) When heavy loads are started, always select the start by current limit. In this way you can set the energy consumption during the start by considering the power line capacity;

5) All motor parameters must be set according to the motor nameplate, P400 to P406;

6) Low torque limits do not supply enough torque to start the motor;

7) Low torque limits are also very sensitive to motor temperature changes, for instance when load is started with cold or hot motor;

8) Low torque limits are also very sensitive to load changes, for instance, oils, greases and relief valves have different resistant torques in relation to the motor start when they are hot or cold;

9) Always maintain motor running after it has been enabled, no matter if it has been started cold or hot;

10) The motor manufacturer supplies the maximum torque developed by the motor, during the starting or at rated load. The Soft-Starters can only limit these values;

11) If errors are detected during the motor start, check all connections of the Soft-Starter to the power line, the motor connections, the voltage levels of the power line, the fuses, circuit-breakers and disconnecting switches.

7.1.6.1 Loads with Constant Torque (P202=3 and P120=1 point)

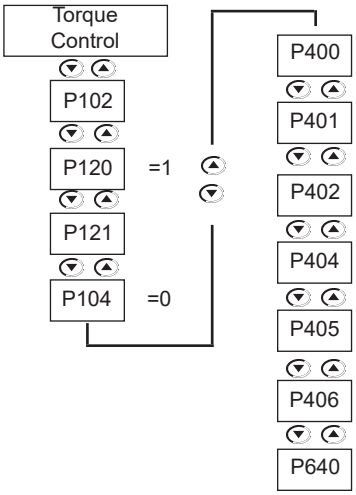

1) Set P121 as percent of the nominal motor torque, necessary for the motor + load during running;
2) Set P102 to the time required for the motor start. At first set short times: 10s to 15s;
3) With the torque control you can start the load smoothly within short starting times due to the linearity of the start speed ramp.

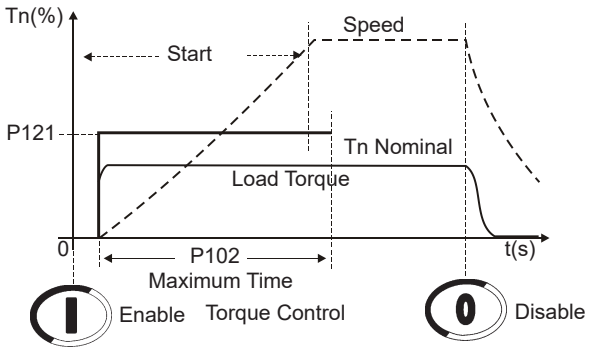

Figure 7.11 *- Start with constant torque control, 1 point*

7.1.6.2 Loads with Higher Initial Torque (P202=3 and P120=3 points)

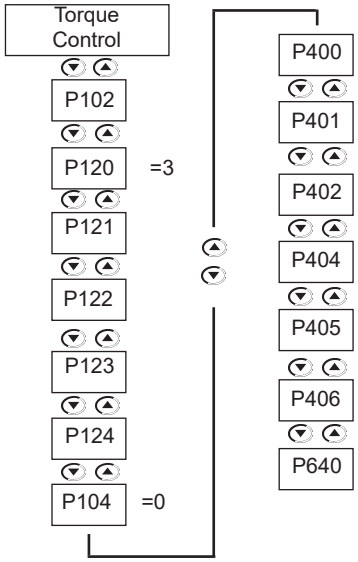

1) Through this function you can achieve a smooth and linear starting ramp. This function is very useful for conveyors belt;
2) Through the load curve you can set a starting torque 10% to 20% higher than the load torque for each one of the points P121, P123, P122 and the times at P102 and P124;
3) For the first start you can use a speed measuring instrument, thus ensuring the desired acceleration or the desired speed curve;
4) If no load curves are available, you can apply a similar method as the current ramp method. Also the torque limit, P120=1, can be used for executing the first starts and afterwards changing to this function.

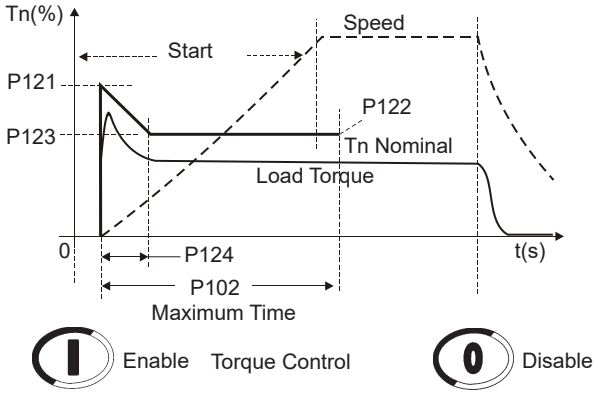

Figure 7.12 *- Starting with quadratic torque control, 3 points, with higher initial load*

7.1.6.3 Loads with Constant Torque and S Speed Curve (P202=3 and 120=3 points)

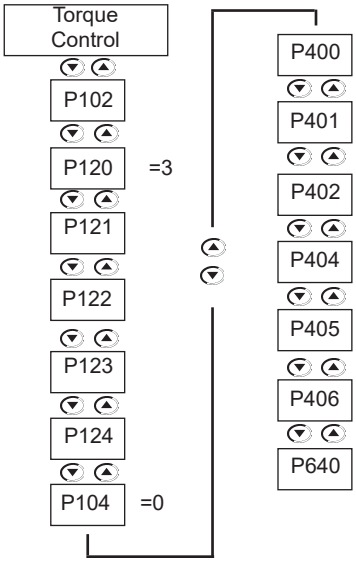

1) Through the load curve you can set the torque 10% to 20% higher than the load torque for the initial and the end points, P121 and P122, and 30% to 40% higher than load torque for the middle point P123;
2) Maintain P124 between 45% to 55% and set P102 according to the starting time;
3) For the first start you can use a speed measuring instrument, thus ensuring the desired acceleration or the desired speed curve;
4) If no load curve is available, but you are sure that the torque is constant, you can use the torque limit, P120=1 for executing the first starts and changing to this function afterwards.

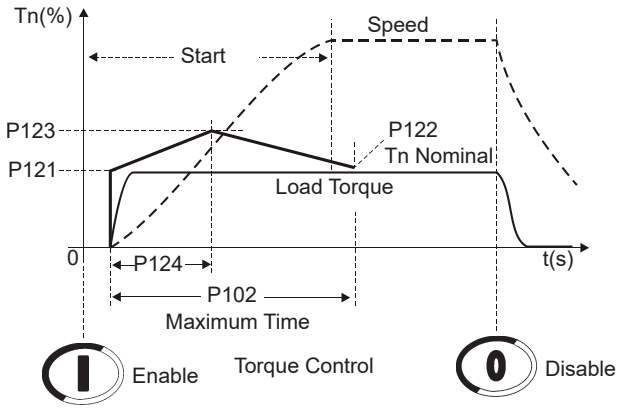

Figure 7.13 *- Starting with quadratic torque control, 3 points, with constant load*

7.1.6.4 Loads with Quadratic Torque and S Speed Curve (P202=3 and P120=2 points)

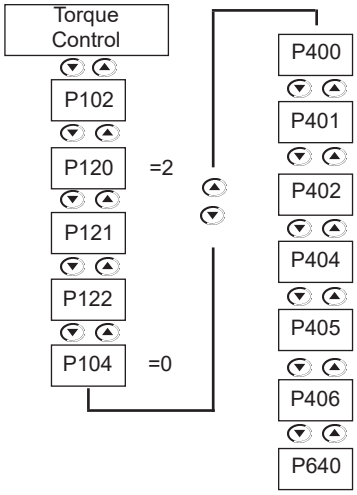

1) Through the linear torque ramp you can obtain a speed curve very similar to a S-curve with quadratic load, but not very steep;
2) Through the load curve you can set the torque 10% to 20% higher than the load torque for the initial point P121, and 20% to 30% higher than the load torque for the end point, P122;
3) If no load curves are available, proceed as follows:
3.1) Set P121 to the required torque to start rotating the motor + load;
3.2) Set P122 to 110% to 130% of the nominal motor torque;
3.3) At first set P102 to low values, 10s to 15s and then find the best value.

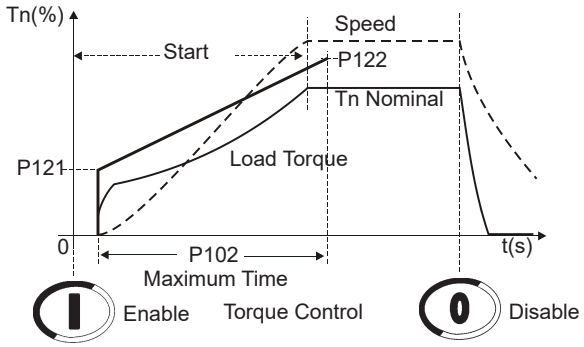

Figure 7.14 *- Starting with linear torque control, 2 points, quadratic load*

7.1.6.5 Loads with Quadratic Torque and Linear Speed Curve (P202=3 and P120=3 points)

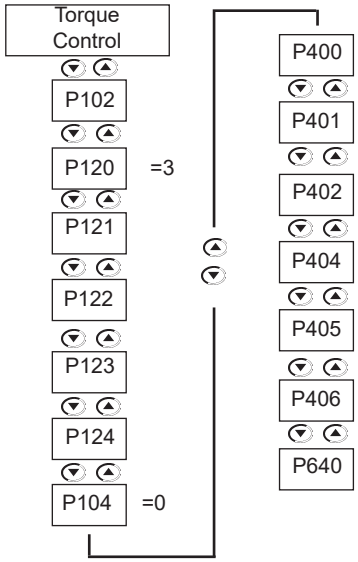

1) Through a steep quadratic load you can set an intermediate point for improving the linearity of the start speed curve;
2) Through the load curve you can set the torque 20% to 30% higher than the load torque for all points P121, P123 and P122 and set P124 as a percent of the time for the intermediate point
3) If no load curves are available, set it initially with a linear torque, P120=2 points, and afterwards set the intermediate time and torque.

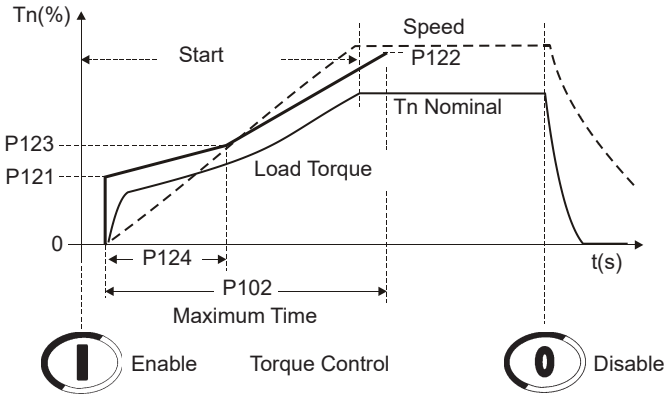

Figure 7.15 *- Starting with quadratic torque control, 3 points, quadratic load*

7.1.6.6 Loads with Quadratic Torque and Higher Initial Torque (P202=3 and P120=3 points)

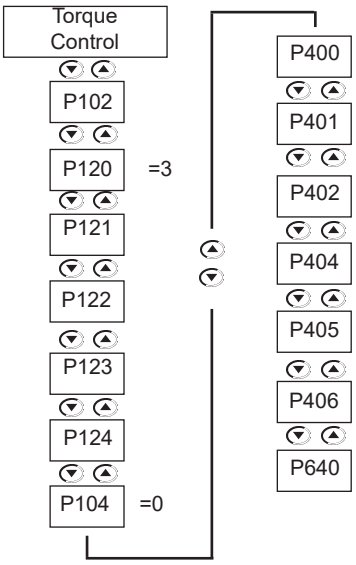

1) With a very steep quadratic load, very high initial torque, you can set an intermediate point for improving the linearity of the start speed curve;
2) Through the load curve you can set the torque 20% to 30% higher than the load torque for all points P121, P123 and P122 and set P124 as a percent of the time for the intermediate point;
3) If no load curves are available, set it initially with linear torque, P120=2 points, and afterwards set the intermediate time and torque.

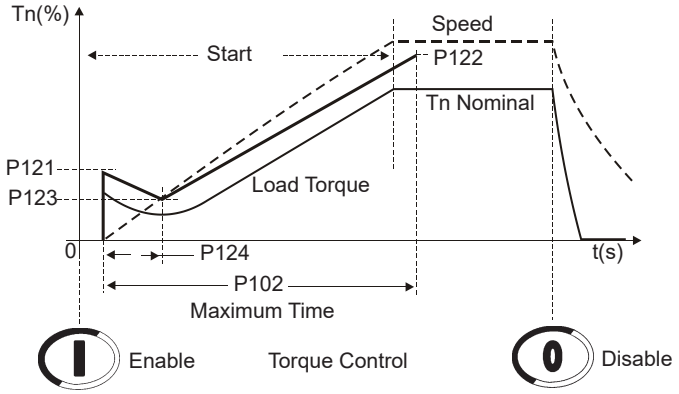

Figure 7.16 *- Starting with quadratic torque control, 3 points, quadratic load with higher initial torque*

7.1.6.7 Hydraulic Pump Load Type (P202=3)

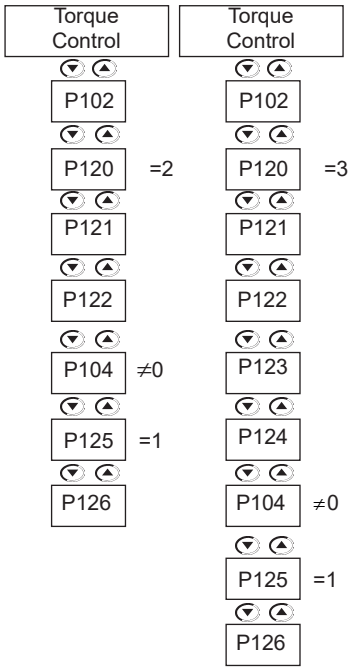

Starting (P120=2 or P120=3):

1) Before any setting, carefully read carefully the steps described in Starting with Pump Control, item 7.1.5;
2) If the pump control does not meet your requirements or if a control with better performance is desired, use the torque control;
3) With a linear torque ramp you can obtain a speed curve very similar to the S-Curve with quadratic loads, as centrifugal pumps;
4) Through the load curve you can set the torque 10% to 20% higher than the load torque for the initial point P121, and 20% to 30% higher than the load torque for the end point, P122;
5) Even when the load curve is used, we recommend executing a setting at the application field. For this, proceed as follows:

5.1) Set P121 to the torque required to start rotating the pump;
5.2) Set P122 to 110% to 130% of the nominal motor torque;
5.3) Set P102 initially to lower values, 10s to 15s, then increase this setting.

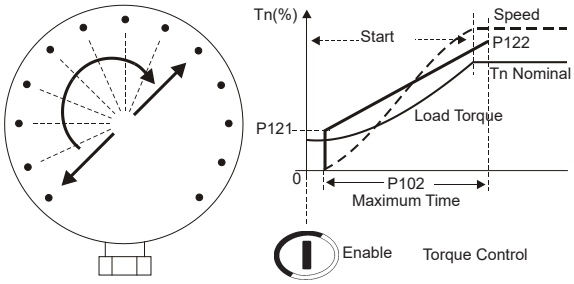

***Figure 7.17** - Manometer showing the pressure increase, linear torque*

6) If the load has a higher initial torque, use the quadratic torque (P120=3 points);

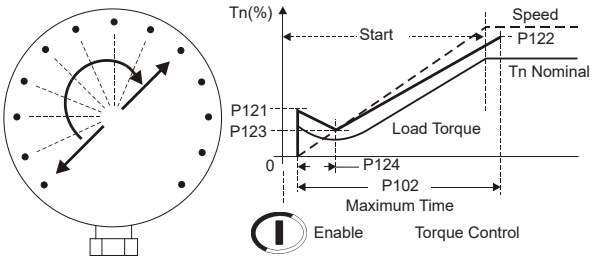

***Figure 7.18** - Manometer showing the pressure increase, quadratic torque*

7) The main purpose of the two above mentioned cases is maintaining the pressure ramp as linear as possible, increasing it gradually, without causing any kind of sudden oscillation.
8) As already described in the pump control, the use of a measuring instrument is required for measuring this pressure and so obtaining the best setting;

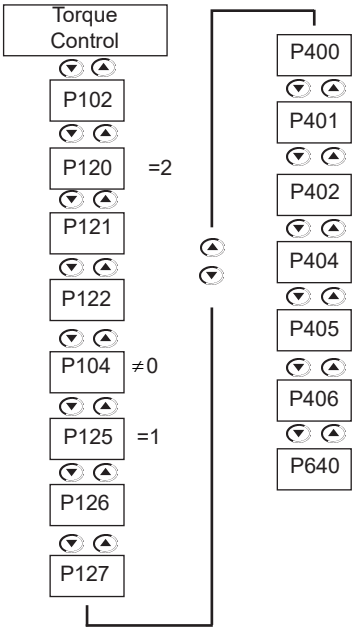

Stopping (P104≠0 and P125=1):

1) In most applications only the constant torque control can be used for pump stopping, 1 point=constant;
2) This method is used for water columns that are not very high;
3) Set P126 initially to the same value of P121, provided it is correct;
4) Set P126 in such a way that at the end of the pump stopping process the motor is not still enabled for a long time;
5) As soon as the pump is disabled, a gradual pressure drop should be noted without significant pressure oscillation, mainly at the end of the stop, when the retaining valve is closed.

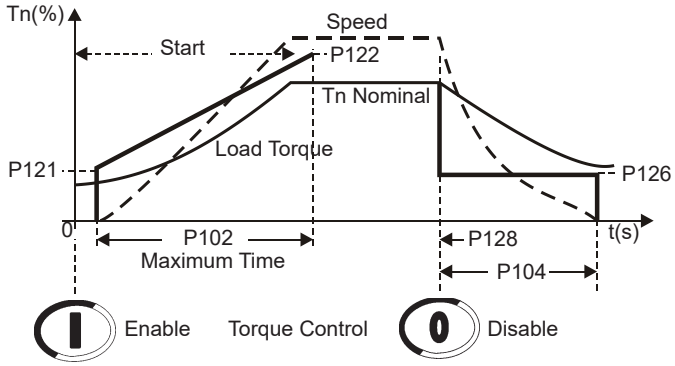

Figure 7.19 *- Hydraulic pump stopping with constant torque, 1 point*

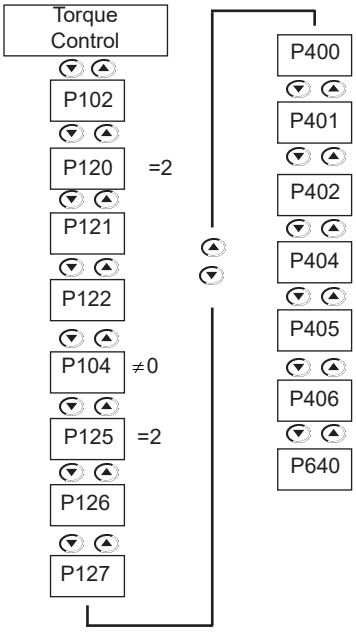

Stopping (P104≠0 and P125=2):

1) Linear deceleration torque, 2 points=linear;
2) Applied to high water columns;
3) At first you can set P126 for 10% to 15% lower than the value of P121, provided this value is correct;
4) Set P127 so that at the beginning of the pump stopping, the pressure decreases gradually and no sudden oscillation occurs;
5) Set P126 so that at the end of the pump stopping process the motor is not still enabled for a long time.

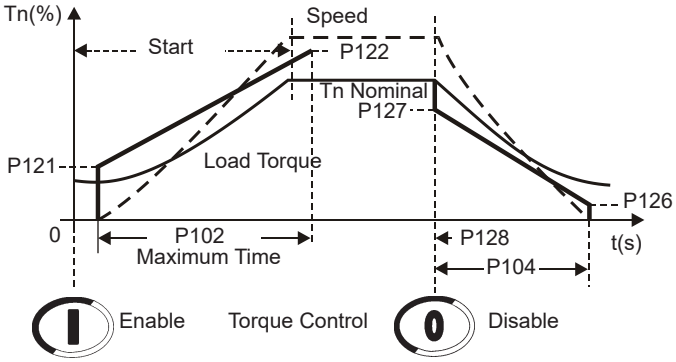

Figure 7.20 *- Hydraulic pump stopping with linear torque, 2 points*

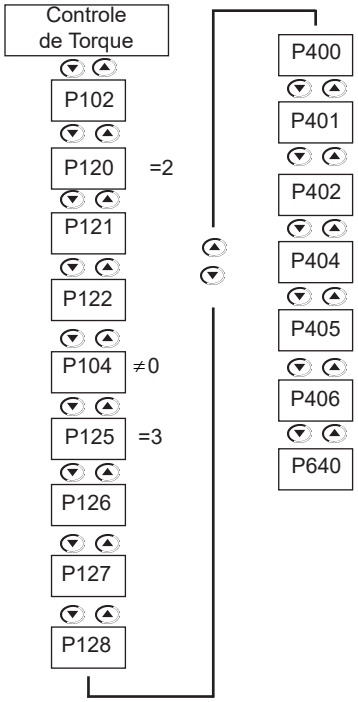

Stopping (P104≠0 and P125=3):

1) Quadratic deceleration torque, 3 points=quadratic;
2) Applied to high water columns with high pressures;
3) This control is used when it is difficult to achieve a gradual pressure drop without sudden pressure oscillations, mainly at the start of the stopping process;
4) The best way to perform this is to use the load curve as a base and set the 3 points 10% to 15% lower;
5) Set P128 initially to 50%;
6) Set P127 so that at the beginning of the pump stopping, the pressure decreases gradually and no sudden pressure oscillation occurs;
7) Set P126 so that at the end of the pump stopping process the motor is not still enabled for a long time.

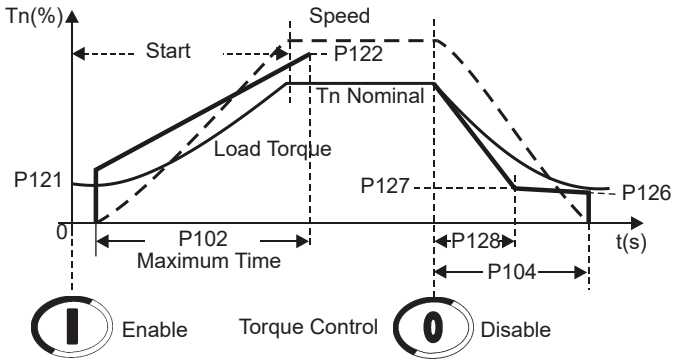

***Figure 7.21** - Hydraulic pump stopping with quadratic torque, 3 points*

8) If the load shows a higher initial torque, use the quadratic torque control (P120=3 points).

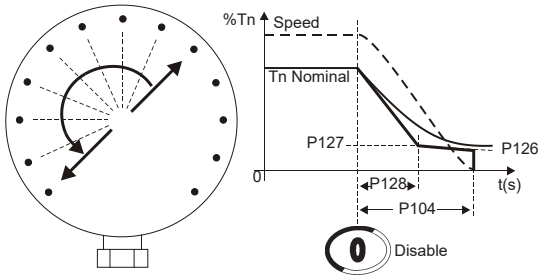

***Figure 7.22** - Manometer showing the pressure drop, torque control*

NOTES!

1) The main purpose of the torque control types applied to the stopping is to maintain the drop in the pressure ramp as linear as possible, decreasing the pressure gradually and thus preventing sudden pressure oscillation, at the beginning, middle and at the end of the stopping;
2) As already described in the pump control, the use of a measuring instrument is required to measure the pressure and obtain the best setting;
3) Remember: constant torque control is suitable for the greatest number of applications and its use is very easy.

7.2 PROTECTIONS AND PROGRAMMING

7.2.1 Thermal Classes

7.2.1.1 Suggestions on How to Set Thermal Class

1) Initially start the motor some times in the standard thermal class, but without heating it up excessively;

2) Determine correct starting time. Find an average of the current through the P002 during the starting time. One can find a current average for any kind of starting control.

   For example:
   When an 80A motor is started by voltage ramp, the current at P002 starts at 100A and increases to 300A and after 20s decreases to the nominal current.
   (100A+300A)/2 = 200A
   200A/80A = 2.5 x In of the motor
   then: 2.5 x In @ 20s.

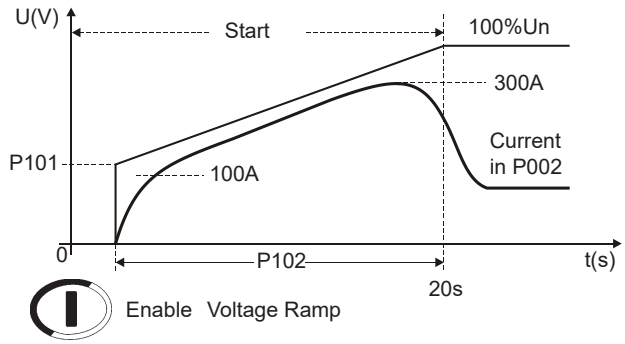

Figure 7.23 *- Typical current curve when started by voltage ramp*

3) Use this time to find the minimum class necessary to start a cold motor according to the descriptions of P640 in chapter 6;

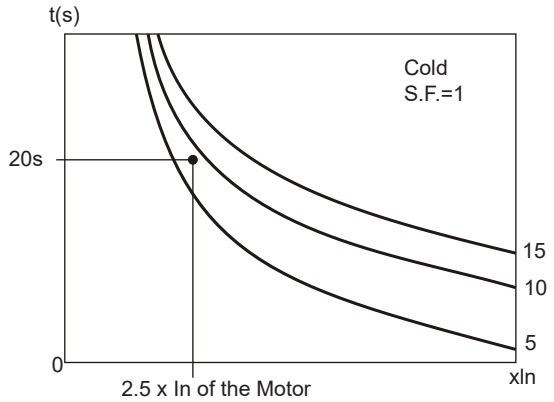

Figure 7.24 *- Determining the minimum thermal class with cold motor*

Thus the minimum required thermal class for starting the motor is the Class 10. The Class 5 requires a shorter time for this current.
This Thermal Class allows motor cold start.

4) To determine the thermal class for starting at hot motor, the motor thermal class must be known. For this we must determine the allowed blocked rotor time.

NOTE!
To program the Thermal Class that your motor will withstand, the allowed locked rotor time must be available. For this data, please refer to the manufacturer catalog.

With the blocked rotor time we can find the maximum thermal class that will protect the motor for hot starting, according to the descriptions of P640;
For example:
6.6 x In @ 6s

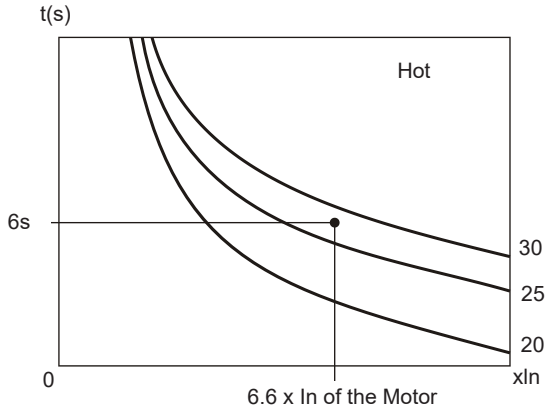

***Figure 7.25** - Determining the maximum thermal classes through the hot starting curves*

Thus, the maximum thermal class that will protect the motor is Class 25, Class 30 has too long time for this current.
This thermal class allows the motor to start at hot motor, in other words, it can be started in any condition.

NOTE!
Please consider that this protection adopts WEG standard three--phase IP55 motor as a standard. Thus, if your motor is different, do not program the maximum allowed thermal class, but program the thermal class near the minimum thermal class required for the start.

7.2.1.2 Example on How to Set the Thermal Class

Motor Data:
Power: 50 HP
Voltage: 380V
Nominal current (In): 71A
Service Factor (S.F.): 1.00
Ip/In : 6.6
Blocked rotor time:12s at hot
Speed: 1770 rpm

Data about the motor + load Starting:
Starting by Voltage Ramp, average starting current:
3 x the nominal motor current during 25s (3 x In @ 25s).

1) In the chart, at cold at P640, we can find the minimum required Thermal Class that allows motor start with reduced voltage:
For 3 x In @ 25s, we select the closest higher one: Class 10.

2) In the chart, at hot in P640, we can find the maximum Thermal Class that the motor will withstand due to the locked rotor time at hot: For 6.6 x In @ 12s, we select the closest lower Class: Class 40.

Now it is known that Thermal Class 10 allows one start and Thermal Class 40 is the upper limit. Thus you must select a Thermal Class between these two Thermal Classes by considering the number of starts per hour and the time interval between motor Off-On procedures.

The closer to Class 10 you select, more protected will be your motor, less starts per hour are allowed and longer time intervals between motor Off-On procedures are required.

The closer to Class 40 you select, you will be nearer the upper motor limit, thus more starts per hour are allowed and shorter time intervals between motor Off-On procedures can be used.

7.2.1.3 Time Reduction When Changing from Cold Starting to Hot Starting

To determine the activation times of the hot Thermal Classes, when the motor is running at rated load with current lower than 100% of the In, use the multiplier factor shown in table 6.46 at P640, as a percentage of the current that the motor is absorbing when running continuously.

For example:
A motor is running with 80% In and then is switched Off.
It is switched On again immediately.
The starting current is 3xIn @ 25s.
The selected Thermal Class, in the table 6.43, is the Class 10 with 33.7s @ 3xIn.
As shown in table 6.46, the correction factor for 80% In is 0.48.

The final activation time will be: 0.48 x 33.7s = 16.2s, and, the time is reduced at cold start from 33.7s to 16.2s at hot start. Thus, a new motor start is not allowed before the thermal motor image decreases, the motor cools down.

7.2.1.4 Service Factor

When the Service factor (S.F.) is different from 1.00, but its use is required, you can find in the chart, at cold, the points for the S.F. = 1.15 and a table for S.F. = 1.15, see P640.

If you want to know the thermal protection activation time for other Service Factor (S.F.), displace the line xIn proportionally to the left.

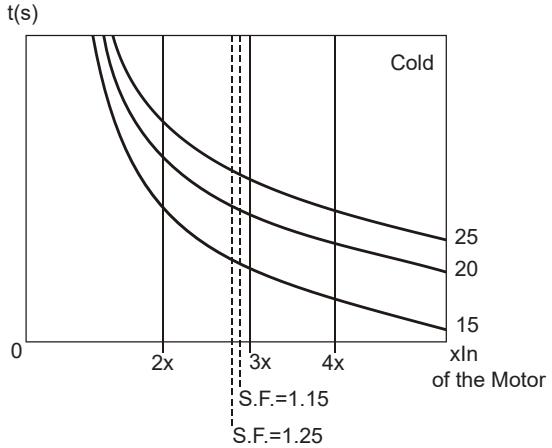

Figure 7.26 *- Using the S.F. to find new times*

7.2.2 Under- and Over- Protections

In order to make the setting easier, all the under- and over- protections of the SSW-06 are adjusted in percentage of the motor nominal values.

7.2.2.1 Undervoltage and Overvoltage protection

These functions are normally used for the motor protection.
Initially the following data are necessary:

1) Nominal motor voltage adjusted in P400, it is a motor nameplate data.
2) The voltage variation tolerated by the motor, it is a motor manufacturer catalog data, normally from -15% to +10% of the nominal voltage.

Setting example:
Nominal motor voltage of 380V,
Voltage tolerance from -15% to +10%.
P400=380V
P600=15%
P602=10%
Therefore, when there is a voltage drop deeper than 15% in the supply voltage, regarding the nominal voltage, the undervoltage protection will trip. And when there is a voltage increase higher than 10% in the supply voltage, regarding the nominal voltage, the overvoltage protection will trip.

7.2.2.2 Underload Protection

It is normally used for the detection of no load pump; it can also be used for the detection of loads under the minimum allowed value.

It can be configured according to the needs and **knowledge** of the user among: Undercurrent, Undertorque or Underpower. All these functions present the same form of protection; however, Undertorque and Underpower are more sensitive and detect variations in both voltage and current.

Example of Undercurrent setting:
Nominal motor current of 100A.
There is a normal ±10A load oscillation in this application.
Without load it drops to 60A.
In percentage:
There is a normal load oscillation of ±10% of the nominal motor current.
There is a 40% drop in the nominal motor current for the no load condition.
In order to get Underload detection, the Undercurrent protection must be programmed between 10% and 40% (30% for instance):
P401=100A
P610=30%
P611=1s
Therefore, when there is a drop bigger than 30% in the motor current, regarding the nominal current, the protection will trip.

The same sequence demonstrated above is valid also for Undertorque and Underpower; however the respective parameters for the desired function must be adjusted.

7.2.2.3 Overload Protection

It can be configured according to the needs and **knowledge** of the user among: Overcurrent, Overtorque or Overpower. All these functions present the same form of protection; however, Overtorque and

Overpower are more sensitive and detect variations in both voltage and current.

Example of Overcurrent setting:
Nominal motor current of 100A.
There is a normal ±10A load oscillation in this application.
The motor Service Factor (S.F.) is 1.15.
In percentage:
There is a normal load oscillation of ±10% of the nominal motor current.
The motor tolerates a 15% overload according to the S.F.
In order to get Overload protection, the Overcurrent protection can be programmed higher than 15%.
P401=100A
P612=20%
P613=1s
Therefore, when there is an increase higher than 20% in the motor current, regarding the nominal current, the protection will trip.

The same sequence demonstrated above is valid also for Overtorque and Overpower; however the respective parameters for the desired function must be adjusted.

DIAGNOSTICS AND TROUBLESHOOTING

This Chapter helps the user to identify and correct possible faults that can occur during the Soft-Starter SSW-06 operation. This Chapter also provides instructions about periodical inspections and cleaning requirements.

8.1 FAULTS AND POSSIBLE CAUSES

When most of the errors are detected, the motor is switched off and the error is shown on the display as EXY, XY being the error code.
For the SSW-06 Soft-Starter to return to normal operation after an error, it is necessary to reset it. This can generally be done in the following ways:

- ☑ Disconnecting and reapplying AC power (power-on reset);
- ☑ Pressing the 0 of the keypad - (manual reset);
- ☑ Automatic reset through P206 setting (auto-reset);
- ☑ Via digital input: DI2 (P264 = 2) or DI3 (P265 = 2) or DI4 (P266 = 6) or DI5 (P267 = 6) or DI6 (P268 = 6).

The fault trips can be transformed into alarms by means of P700 to P799. The alarms are showed on the display as Axy, being Axy the fault code. They are automatically reset.

The table below shows the reset details for each possible cause.

FAULT	DESCRIPTION OF THE ACTUATION	POSSIBLE CAUSES	RESET
E03 Undervoltage at power section during operation Phase loss or voltage imbalance in the power section during operation Phase loss in the power at start	When the voltage between phases is lower than the programmed value during the programmed time. The nominal motor voltage is used as a reference. When the voltage between phases is lower or higher than the programmed value during the programmed time, or when phase loss has been detected. The other two motor phases are used as reference. When there is no voltage synchronization pulse at start.	The line undervoltage value (in percentage of P400) is higher than the programmed in P600, longer than the time programmed in P601. The value of the voltage imbalance between the line phases (in percentage of P400) is higher than the programmed in P604, longer than the time programmed in P605. Voltage drop during start. Phase loss in the power supply. Input transformers have been undersized. Actuation problems with input contactor. Fuses at input are open. Loose contact in the power supply connections. Wrong motor connection.	Power-on Manual Reset Auto-reset DIx
E04 Soft-Starter overtemperature	When the thermostats of the heatsink act.	Panel with unsuitable cooling. Start cycles not permitted.	Power-on Manual Reset Auto-reset DIx
E05 or A05 Motor overload	When the times given by the curves of the programmed thermal classes exceed the programmed values.	Start cycles not permitted. Thermal classes are programmed in P640 lower than permitted by the motor duty. Off/On intervals shorter than required for the motor cooling. The value of the thermal protection saved when switching off returns when switched on again.	Power-on Manual Reset Auto-reset DIx
E06 or A06 External fault or Alarm	When the digital input programmed to No External Fault opens, P266, P267 or P268.	DI4...DI6 wiring is open or not connected to +24V. X1 connector of the CCS6 control board is disconnected.	Power-on Manual Reset Auto-reset DIx
E10 Error in the copy function	When the Keypad has been loaded with parameters of a different version to the switch.	A bid to copy the keypad parameters to a Soft-Starter with different Software version.	Power-on Manual Reset DIx

Table 8.1 *- Detailed fault description*

FAULT	DESCRIPTION OF THE ACTUATION	POSSIBLE CAUSES	RESET
E11 Ground Fault	The ground fault is detected through the instantaneous imbalance between the supply phases current.	The values adjusted in P618 and P619 are too low for the application. Ground fault at the motor connection. Ground fault in the motor.	Power-on Manual Reset DIx
E15 Motor not connected	When there is no current synchronism pulse at the initial start.	Loose contact of the motor connections. Thyristors or internal By-pass relays are short-circuited. P150 setting wrong.	Power-on Manual Reset DIx
E16 or A16 Overvoltage	When the voltage between phases is higher than programmed during the programmed time. As reference the nominal line voltage is used.	The line overvoltage value (in percentage of P400) is higher than the programmed in P602, longer than the time programmed in P603. Transformer tap selected with too high voltage. Capacitive power supply with too low inductive load.	Power-on Manual Reset Auto-reset DIx
E18 Wrong motor connection	When the value of the Soft-Starter output voltage is wrong, while the motor is disabled.	Loose contact in the motor connection. Wrong motor connection. P150 setting wrong.	Power-on Manual Reset DIx
E19 Short circuit in the SSW power	When the current value in one of the phases is above 30% of the Soft-Starter rated current with the motor stopped, that is, without the Run command.	Short circuit in some thyristor or relay of internal by-pass. External short circuit in parallel with the Soft-Starter power. Defect in the current analog reading.	Power-on Manual Reset DIx
E24 Programming error	When the setting of an incompatible parameter has been programmed.	Setting attempt of an incompatible parameter. See table 4.2.	Automatic Reset after fault correction
E28 Timeout error in the telegram of the serial communication	When the Soft-Starter does not receive telegrams from the master during a time longer than has been programmed at P314.	The Timeout programmed at P314 is longer than the time programmed between the telegrams sent by the network master. The master does not send telegrams cyclically, program P314=0. When the serial communication is not used, program P314=0. For more information, please refer to the Soft-Starter SSW-06 Serial Communication Manual.	Power-on Automatic Reset after fault correction
E29 Communication error Fieldbus inactive	When the Fieldbus communication board is active and Communication with the Master is inactive.	Communication error between the Fieldbus Network Master and the Soft-Starter SSW-06. Master configuration problem. Communication cables are not installed correctly. When the Fieldbus communication board is not being used, program P309=0. The Profibus master is in Stop, or P310=1 when the bit 6 of the control word is not being used. For more details, please refer to the Fieldbus Communication Manual of the Soft-Starter SSW-06.	Power-on Automatic Reset after fault correction
E30 Communication board error Fieldbus inactive	Soft-Starter could not access the Fieldbus communication board during the initialization or during operation.	Data exchange problems between the Soft-Starter SSW-06 and the Fieldbus communication board. Wrong configuration of the Fieldbus communication board, programmed at P309. Board connection problem. When the Fieldbus communication board is not being used, program P309=0. For more details, please refer to the Fieldbus Communication Manual of the Soft-Starter SSW-06.	Power-on Automatic Reset after fault correction
E31 Keypad connection fault	When the electrical connection between the Keypad and the SSW-06 has been interrupted.	Loose contact in the Keypad connection. Electrical noise (electromagnetic interference).	Automatic Reset after fault correction

Table 8.1 (Cont.) *- Detailed fault description*

FAULT	DESCRIPTION OF THE ACTUATION	POSSIBLE CAUSES	RESET
E32 or A32 Motor overtemperature (DI6 = PTC)	When the DI6 digital input is programmed to the motor PTC input and the detector acts.	Excessive load on the shaft. Load cycle too high (large number of starts and stops per minute). Ambient temperature too high. Loose contact or short-circuit (resistance <100) in the wiring from motor thermistor to X1 terminal of the CCS6 board. P268 is set to 7 without a thermistor installed at the motor. Stalled motor, locked rotor.	Power-on Manual Reset Auto-reset DIx
E33 or A33 Motor Overtemperature Ch1	It acts as the levels: P091 ≥ P672 = E33 P091 ≥ P673 = A33	Motor overtemperature. Motor overload. Load cycle too high (large number of starts and stops per hour). Motor not develops the necessary torque for the load. Errors and alarms levels adjusted are lower that supported by the motor (motor class isolation).	Power-on Manual Reset Auto-reset DIx
E34 or A34 Motor Overtemperature Ch2	It acts as the levels: P092 ≥ P676 = E34 P092 ≥ P677 = A34		
E35 or A35 Motor Overtemperature Ch3	It acts as the levels: P093 ≥ P680 = E35 P093 ≥ P681 = A35		
E36 or A36 Motor Overtemperature Ch4	It acts as the levels: P094 ≥ P684 = E36 P094 ≥ P685 = A36		
E37 or A37 Motor Overtemperature Ch5	It acts as the levels: P095 ≥ P688 = E37 P095 ≥ P689 = A37		
E39 Without PT106 optional board	The PT106 optional board was not detected with P670 active.	PT106 optional board with problems. If PT106 optional board will not being used, to program P670=0.	Power-on Manual Reset Auto-reset DIx
E41 Self-Diagnosis fault during power-on	When the conversion of the input current is out of allowed range: 2,5V ±3%.	Loose electric contact in the current transformer cables or control board connection cables. A thyristor or contactor in short-circuit. Problems in the control board.	Power-on Manual Reset DIx
E43 or A43 Ch1 Motor Temperature Broken Cable **E44 or A44** Ch2 Motor Temperature Broken Cable **E45 or A45** Ch3 Motor Temperature Broken Cable **E46 or A46** Ch4 Motor Temperature Broken Cable **E47 or A47** Ch5 Motor Temperature Broken Cable	It detects the opening of the circuit of the temperature channels, through the break of some of the three wire of each sensor.	Motor temperature sensor with wire broken or opened. Temperature channel adjusted for error or alarm without sensor. Connectors of the PT106 board not connected. Comment: Programming of the broken wire actuation as error or alarm is in the P691.	Power-on Manual Reset Auto-reset DIx

Table 8.1 (Cont.) *- Detailed fault description*

FAULT	DESCRIPTION OF THE ACTUATION	POSSIBLE CAUSES	RESET
E48 or A48 Ch1 Motor Temperature Short Circuit **E49 or A49** Ch2 Motor Temperature Short Circuit **E50 or A50** Ch3 Motor Temperature Short Circuit **E51 or A51** Ch4 Motor Temperature Short Circuit **E52 or A52** Ch5 Motor Temperature Short Circuit	It detects a short circuit of the temperature channels, through the short circuit enters the three wire of each sensor.	Short circuit in the wires of the temperature sensor of the motor. Comment: Programming of the broken wire actuation as error or alarm is in the P691.	Power-on Manual Reset Auto-reset DIx
E57 Failure in the SCRs of the Power Module R-U **E58** Failure in the SCRs of the Power Module S-V **E59** Failure in the SCRs of the Power Module T-W	When the SCR is not switched on in less than 50ms.	One of the SCRs of the indicated power module is damaged. Bad contact in the firing circuit cables of the indicated power module, (R-U: X8 and X9, S-V: X10 and X11, T-W: X12 and X13). Defective CPS6X board.	Power-on Manual Reset DIx
E62 Too long time for the current or torque limit during the start	When the start time due to start with current limit, current ramp or torque control is longer than the time set at P102.	Time programmed at P102 is shorter than required. The programmed current limit at P110 is too low. The programmed current limit at any point of current ramp is too low. The programmed torque limit at any point of the torque control is too low. Stalled motor, locked rotor.	Power-on Manual Reset DIx
E63 Locked rotor at the start end	When at the end of the acceleration ramp the current is not lower than 2x the nominal motor current (P401x2) before closing of the By-pass relay.	The nominal motor current that has been programmed at P401 is wrong. The time programmed at P102 is shorter than required to start the motor by voltage ramp. The transformer that supplies the motor may be saturated and requires too much time to recover from the starting current. Stalled motor, locked rotor. For special motors that support this working condition you can set P617=0.	Power-on Manual Reset DIx
E65 or A65 Motor undercurrent at full voltage operation	When the current is lower than programmed during the programmed time. Nominal motor current is used as reference.	The percent value programmed as maximum acceptable undercurrent limit (P610) is lower than required for the motor and its application. In applications with hydraulic pumps which may be operated without load.	Power-on Manual Reset Auto-reset DIx
E66 or A66 Motor overcurrent at full voltage operation	When the current is higher than programmed during the programmed time. The nominal motor current is used as reference.	The percent value programmed as maximum acceptable overcurrent limit (P612) is lower than required for the motor and its application. Motor with instantaneous overload. Stalled motor, locked rotor.	Power-on Manual Reset Auto-reset DIx
E67 Wrong phase sequence at start	When the signal sequence of the synchronism do not follow the **R**/1L1, **S**/3L2, **T**/5L3 sequence.	Parameter P620 has been programmed without need. Wrong phase sequence. This can be changed in another point of the power supply line.	Power-on Manual Reset DIx

Table 8.1 (Cont.) *- Detailed fault description*

FAULT	DESCRIPTION OF THE ACTUATION	POSSIBLE CAUSES	RESET
E70 Undervoltage at the electronics supply	When the supply of the control board power supply is lower than 93,5Vac.	Phase loss in the control board supply. Loose contact in the control board supply. Fuse in control board supply is open, glass fuse 5x20mm 2A with delayed action.	Power-on Manual Reset Auto-reset DIx
E71 Internal By-pass relay contact is open	When any problem with the contacts of the By-pass relay, internal or external, has been detected at full voltage after start.	Loose contact of the internal or extenal By-pass relay supply. Loose contact of the internal or extenal By-pass relay due to an overload. P140=1 without external By-pass relay connected. Nominal Soft-Starter current has been wrong programmed at P295.	Power-on Manual Reset DIx
E72 Overcurrent before By-pass closing	When at the end of the acceleration ramp the current is not lower than 2x the nominal current of the Soft-Starter (P295x2) before closing of the internal By-pass relay.	Nominal Soft-Starter current has been wrong programmed at P295. The time programmed at P102 is shorter than required for the motor start by voltage ramp. Nominal motor current is higher than allowed for the Soft-Starter. Stalled motor, locked rotor.	Power-on Manual Reset DIx
E74 Current imbalance	When the current of one of the phases is lower or higher than the programmed value during the programmed time. The other motor phases are used as reference.	The value of the current imbalance between phases (in percentage of P401) is higher than the programmed in P614, longer than the time programmed in P615. Voltage drop in one or more phases of the power supply. Phase loss in the power supply. Input transformers have been undersized. Input fuses are open. Loose contact of the power supply connections or connections to the motor.	Power-on Manual Reset Auto-reset DIx
E75 Line frequency out of range	When the frequency is lower or higher than the limits from 42.5Hz to 69Hz for more than 0.5s.	When the Soft-Starter + motor are being supplied by a generator that is unable to drive the motor at rated load or is unable to start the motor.	Power-on Manual Reset DIx
E76 Undercurrent before By-pass closing	When at the end of the acceleration ramp the current is lower than 0.1x the nominal current of the Soft-Starter (P295x0.1) before closing of the By-pass relay.	Power supply fault or thyristor fault before By-pass closing. The nominal Soft-Starter current has been wrong programmed at P295. Nominal motor current is lower than the minimum current (P295x0.1). For tests you can set P616=0.	Power-on Manual Reset DIx
E77 By-pass relay contact is closed	When the contact of the By-pass relay, internal or external, will not open.	Loose contact of the internal or extenal By-pass relay supply. Loose contact of the internal or external By-pass relay due to an overload. Short circuit in parallel with the contact of By-pass: thyristor in short circuit, external short circuit. For multimotors applications you can set P621=0.	Power-on Manual Reset DIx
E78 or A78 Undertorque	When the value of the torque is lower than the programmed value, longer than the programmed time. Referenced to the nominal motor torque.	The percentage value programmed as maximum acceptable Undertorque limit (P650) is below the necessary for the motor and the application. In applications with hydraulic pump, it may be running empty.	Power-on Manual Reset Auto-reset DIx
E79 or A79 Overtorque	When the value of the torque is higher than the programmed value, longer than the programmed time. Referenced to the nominal motor torque.	The percentage value programmed as maximum acceptable Overtorque limit (P652) is below the necessary for the motor and the application. Transitory excess of load at the motor. Locked motor, blocked rotor.	Power-on Manual Reset Auto-reset DIx
E80 or A80 Underpower	When the value of the active power is lower than the programmed value, longer than the programmed time. Referenced to the nominal motor power.	The percentage value programmed as maximum acceptable Underpower limit (P660) is below the necessary for the motor and the application. In applications with hydraulic pump, it may be running empty.	Power-on Manual Reset Auto-reset DIx

Table 8.1 (Cont.) *- Detailed fault description*

FAULT	DESCRIPTION OF THE ACTUATION	POSSIBLE CAUSES	RESET
E81 or A81 Overpower	When the value of the active power is higher than the programmed value, longer than the programmed time. Referenced to the nominal motor power.	The percentage value programmed as maximum acceptable Overpower limit (P662) is below the necessary for the motor and the application. Transitory excess of load at the motor. Locked motor, blocked rotor.	Power-on Manual Reset Auto-reset DIx
E85 Without SoftPLC	It verifies the existence of a user software.	P950 = 1 without SoftPLC.	Power-on Manual Reset DIx
E86 to E89 SoftPLC user errors	When forced by the user software.	Defined by the SoftPLC user.	Power-on Manual Reset DIx
A90 to A93 SoftPLC user alarms	When forced by the user software.	Defined by the SoftPLC user.	Power-on Manual Reset DIx

Table 8.1 (Cont.) *- Detailed fault description*

NOTES!

When **E04** message is displayed (Soft-Starter overtemperature), wait a few minutes for it to cool down before it can be reset.
When **E05** message is displayed (motor overload) or **E32** (motor overtemperature), wait a few minutes for the motor to cool down slightly before the Soft-Starter can be reset.

NOTES!

Fault Actuation Results:

E24:
- Indicates the code in the LED display and the fault description in the LCD display (see table 4.2);
- Motor can not be started;
- Switches off the relay that has been programmed to "No Error";
- Switches on the relay that has been programmed to "With Error".

E28, E29 and E30:
- Indicates the code in the LED display;
- Indicates the code and the fault description in the LCD display;
- The actuation result can be configured at P313.

E31:
- Soft-Starter proceeds operation normally;
- No Keypad commands are accepted;
- Indicates code in the LED display;
- Indicates the code and the fault description in the LCD display.

E41:
- Soft-Starter operation is not allowed (motor can not be started);
- Indicates code in the LED display;
- Indicates the code and the fault description in the LCD display.

E70:
- It will not be saved in the last six faults memory when the power supply is switched off (line disconnection) with stopped motor.

OTHER FAULTS:
- Relay is switched off when programmed to "No Error";
- Relay is switched on when programmed to "With Error";
- Motor is switched off, when it is enabled;
- Indicates the fault code in the LED display;
- The LCD display indicates the fault code and the fault description;

- Some data is also saved in the EEPROM memory:
  . The number of the occurred fault (the five previous faults are displaced);
  . The status of the thermal protection (motor overload);
  . The time of the running/powered hours.

Alarm tripping form:
- It indicates the code on the LED display and the alarm description on the LCD display;
- It is only an indication. The motor is not stopped;
- The relay that is programmed for “No Alarm” will be deactivated;
- The relay that is programmed for “Alarm” will be activated;
- They are automatically reset when the alarm situation disappears.

8.2 TROUBLESHOOTING

PROBLEM	POINT TO BE CHECKED	CORRECTIVE ACTION
Motor does not run	Incorrect wiring	1. Check the power and control connections. For example the DIx digital inputs programmed for Enabling or External Fault must be connected to +24V.
	Incorrect programming	1. Check if the parameters are properly programmed for the application.
	Fault	1. Check if the Soft-Starter is not disabled due to a Fault condition (Refer to table 8.1).
Motor does not reach nominal speed	Motor stall	1. Increase the current limit level, if programmed to current limit. 2. Increase the torque limit level, if the torque control mode has been selected.
Motor speed varies (oscillates)	Loose connections	1. Disable Soft-Starter, switch OFF the power supply and tighten all connections. 2. Check if all internal connections are tightened.
Motor speed too low or too high	Motor nameplate data	1. Check if the used motor meets the application requirements.
Display OFF	Keypad connection	1. Check the keypad connections to the Soft-Starter.
	Check the supply voltage of the control board (X1.1, X1.2 and PE)	1. Nominal supply voltage must be following: U_{min} = 93.5 Vac U_{max} = 253 Vac
	Blown fuse	1. Replace the fuse of the control board.
Jerking during pump deceleration	Parameter setting of the Soft-Starter	1. Reduce the time set at P104.

Table 8.2 *- Troubleshooting of the most frequent problems*

8.3 TECHNICAL ASSISTANCE CONTACTING

NOTE!
When contacting WEG for service or technical assistance, please have the following data on hand:

- Soft-Starter Model;
- Serial number, manufacturing date and hardware revision, as indicated on the Soft-Starter nameplate (Refer to Section 2.4);
- Software Version (Refer to Section 2.2);
- Information about the application and Soft-Starter programming.

For further information, training or service, please contact the Technical Assistance or Distributor closest to you.

8.4 PREVENTIVE MAINTENANCE

DANGER!
Always disconnect the main power supply before touching any electrical component associated to the SSW-06 Soft-Starter.
High voltages can be present even after the power supply has been disconnected. Wait at least 3 minutes for the complete discharge of the power capacitors.
Always connect the equipment frame to the protection earth (PE) at the correct point for this.

ATTENTION!
Electronic boards have components sensitive to electrostatic discharges.
Never touch the components or connectors directly. If this is unavoidable, first touch the metallic frame or use a suitable ground strap.

Never apply a high voltage test on the Soft-Starter SSW-06! If this is necessary, contact WEG.

Do not use a Megohmmeter for the Thyristor testing.

To avoid operation problems caused by harsh ambient conditions, such as high temperature, moisture, dirt, vibration or premature aging of the components, periodic inspections of the Soft-Starters SSW-06 and installations are recommended.
When the SSW-06 Soft-Starter is stored for a long period of time, it is recommended that it be energized for 1 hour, each year.

COMPONENT	PROBLEMS	CORRECTIVE ACTIONS
Terminal blocks, connectors	Loose screws	Tighten them (2)
	Loose connectors	
Blowers (1)/ Cooling system	Blowers are dirty	Clean them (2)
	Abnormal acoustic noise	Replace the blower
	Blower is not running	
	Abnormal vibration	
	Dust in the air filters	Clean or replace them (3)
Printed circuit boards	Dust, oil or moisture accumulation, etc.	Clean them (2)
	Smell	Replace them
Power module/ Power connections	Dust, oil or moisture accumulation, etc.	Clean them (2)
	Connection screws are loose	Tighten them (2)
Power resistor	Discoloration	Replace it
	Smell	

Table 8.3 *- Periodic inspections after start-up*

Notes:
(1) It is recommended to replace the blowers after each 40,000 hours of operation;
(2) Twice a year.
(3) Twice a month.

8.4.1 Cleaning Instructions

When it is necessary to clean the SSW-06 Soft-Starter, do so according to the following instructions:

a) Cooling system:

Remove AC power from the Soft-Starter SSW-06 and wait 3 minutes;
Remove all dust from the ventilation openings by using a plastic brush or a soft cloth;
Remove dust accumulated on the heat sink fins and from the blower blades with compressed air.

b) Electronic boards:

Remove AC power from the Soft-Starter SSW-06 and wait 3 minutes;
Remove all dust from the printed circuit boards by using an anti-static soft brush or remove it with an ionized compressed air gun (example Charges Burtes Ion Gun (non nuclear) - reference A6030-6DESCO);
If necessary, remove the PCBs from the Soft-Starter SSW-06;
Always use a ground strap.

8.5 SPARE PART LIST

Name	Item Number	Specification	Models (Amperes) 220-575Vac																			
			10	16	23	30	45	60	85	130	170	205	255	312	365	412	480	604	670	820	950	1100	1400
			Units per Soft-Starter																				
Thyristor Module	10189941	Thyristor Module 72A 1600V					3																
	10190548	Thyristor Module 92A 1600V						3															
	10189901	Thyristor Module 142A 1600V							3														
	10189902	Thyristor Module 180A 1600V								3													
	10190532	Thyristor Module 250A 1600V									3												
	10189903	Thyristor Module 285A 1600V										3											
Disc Thyristor	10189904	Disc Thyristor 490A 1600V											6	6									
	10189905	Disc Thyristor 551A 1600V													6								
	10189943	Disc Thyristor 750A 1600V														6							
	10189935	Disc Thyristor 900A 1600V															6						
	10411443	Disc Thyristor 1200A 1600V																6	6	6			
	0303.7150	Disc Thyristor 1800A 1600V																			6	6	
	10190495	Disc Thyristor 2400A 1600V																					6
Fun	10192867	Fan 40x40mm 12Vdc								1													
	10192264	Fan 120x120mm 110V/220V											2	2	2	2	2	2	3	3			
	10192261	Fan 225x225mm 220V*																			2		
	10192262	Fan 225x225mm 110V*																			2		
	10192259	Fan 280x280mm 220V*																				2	2
Fuse-Control	10328719	Glass Fuse 2A 250V	1	1	1	1	1	1	1	1	1	1	1	1	1	1	1	1	1	1	1	1	1
Keypad (HMI)	10052068	Human Machine Interface	1	1	1	1	1	1	1	1	1	1	1	1	1	1	1	1	1	1	1	1	1
CCS6	10413450	Control Board	1	1	1	1	1	1	1	1	1	1	1	1	1	1	1	1	1	1	1	1	1
CPS61	10715985	Source and Powe Board	1	1	1	1																	
CPS63.00	10051643	Source and Powe Board							1	1	1	1	1	1	1								
CPS63.02	10051661	Source and Powe Board																			1	1	1
CPS63.03	10725940	Source and Powe Board					1	1															
CPS64	10051655	Source and Powe Board														1	1	1	1	1			
RCS60	10051644	RC Snubber Board					1	1	1	1	1	1											
RCS61	10051654	RC Snubber Board											1	1	1	1	1	1	1	1			
RCS63.00	10719683	RC Snubber Board	1	1																			
RCS63.01	10719685	RC Snubber Board			1	1																	
Current Transformer	10050192	TC 50/0,248A 0,4VA 2,5%	3																				
	10723343	TC 80/0,248A 0,5VA 2,5%		3																			
	10723345	TC 115/0,248A 0,7VA 2,5%			3																		
	10723346	TC 150/0,248A 0,9VA 2,5%				3																	
	10726214	TC 225/0,426A 1VA 2,5%					3																
	10726217	TC 300/0,426A 1,4VA 2,5%						3															
	10050181	TC 425/1,24A 2,8VA 2,5%							3														
	10050182	TC 650/1,24A 4,3VA 2,5%								3													
	10050183	TC 850/1,24A 4,7VA 2,5%									3												
	10050184	TC 1025/1,24A 6,8VA 2,5%										3											
	10050185	TC 1275/1,24A 7,5VA 2,5%											3										
	10050186	TC 1560/1,24A 9,1VA 2,5%												3									
	10050187	TC 1825/1,24A 10VA 2,5%													3								
	10050194	TC 2060/2A 8VA 2,5%														3							
	10050195	TC 2400/2A 10VA 2,5%															3						
	10050196	TC 3020/2A 12VA 2,5%																3					
	10050197	TC 3350/2A 13VA 2,5%																	3				
	10050198	TC 4100/2 A 12VA 2,5%																		3			
	11101957	TC 4750/2A 27VA 2,5%																			3		
	11102008	TC 5500/2A 36VA 2,5%																				3	
	11101830	TC 7000/2A 46VA 2,5%																					3
By-pass Relay	10190576	Relay Latching 100A 48Vcc					3	3	3														
	10831571	Relay Latching 130A 48Vcc								3													
	10190577	Relay Latching 200A 48Vcc									2	3	3	3	3								
By-pass Contactor	10046674	Contactor CWM105DP-SB955														3	3	3	3	3			
RC Snubber	10190163	Wire Resistor 25R 50W 10%																			3	3	3
	10190364	Polip. Capacitor 0,47 µF 850V																			3	3	3

* a) The 110Vac fan is used in the SSW06XXXXT2257ESH1Z.
b) The 220Vac fan is used in the SSW06XXXXT2257ESH2Z.

Table 8.4 *- Spare parts list*

Name	Item Number	Specification	Models (Amperes) 575-690Vac																
			45	60	85	130	170	205	255	312	365	412	480	604	670	820	950	1100	1400
			Units per Soft-Starter																
Thyristor Module	10954635	Thyristor Module 72A 1800V	3																
	10954636	Thyristor Module 92A 1800V		3															
	10954749	Thyristor Module 142A 1800V			3														
	10954710	Thyristor Module 250A 1800V				3	3												
Disc Thyristor	10954717	Disc Thyristor 508A 1800V						6	6	6									
	10954963	Disc Thyristor 550A 1800V									6								
	10955053	Disc Thyristor 750A 1800V										6							
	10954961	Disc Thyristor 900A 1800V											6						
	10954962	Disc Thyristor 1200A 1800V												6	6	6			
	11034525	Disc Thyristor 1500A 1800V															6		
	11034526	Disc Thyristor 1800A 1800V																6	
	11034527	Disc Thyistor 3000A 1800V																	6
Fan	10192264	Fan 120x120mm 110V/220Vac						2	2	2	2	2	2	2	3	3			
	10192261	Fan 225x225mm 220Vac*															2		
	10192262	Fan 225x225mm 110Vac*															2		
	10192259	Fan 280x280mm 220Vac*																2	2
Fuse-Control	10328719	Glass Fuse 2A 250V	1	1	1	1	1	1	1	1	1	1	1	1	1	1	1	1	1
Keypad (HMI)	10052068	Human Machine Interface	1	1	1	1	1	1	1	1	1	1	1	1	1	1	1	1	1
CCS6	10413450	Control Board	1	1	1	1	1	1	1	1	1	1	1	1	1	1	1	1	1
CPS66.00	10051643	Source and Power Board			1	1	1	1	1	1	1								
CPS66.01	10051661	Source and Power Board															1	1	1
CPS66.02	10725940	Source and Power Board	1	1															
CPS65	10092578	Source and Power Board										1	1	1	1	1			
RCS60	10051644	RC Snubber Board	1	1	1	1	1												
RCS61	10051654	RC Snubber Board						1	1	1	1	1	1	1	1	1			
Current Transformer	10726214	CT 225/0,426A 1VA 2,5%	3																
	10726217	CT 300/0,426A 1,4VA 2,5%		3															
	10050181	CT 425/1,24A 2,8VA 2,5%			3														
	10050182	CT 650/1,24A 4,3VA 2,5%				3													
	10050183	CT 850/1,24A 4,7VA 2,5%					3												
	10050184	CT 1025/1,24A 6,8VA 2,5%						3											
	10050185	CT 1275/1,24A 7,5VA 2,5%							3										
	10050186	CT 1560/1,24A 9,1VA 2,5%								3									
	10050187	CT 1825/1,24A 10VA 2,5%									3								
	10050194	CT 2060/2A 8VA 2,5%										3							
	10050195	CT 2400/2A 10VA 2,5%											3						
	10050196	CT 3020/2A 12VA 2,5%												3					
	10050197	CT 3350/2A 13VA 2,5%													3				
	10050198	CT 4100/2A 12VA 2,5%														3			
	11101957	CT 4750/2A 27VA 2,5%															3		
	11102008	CT 5500/2A 36VA 2,5%																3	
	11101830	CT 7000/2A 46VA 2,5%																	3
By-pass Relay	10190576	Latching Relay 100A 48Vdc	3	3	3														
	10190577	Latching Relay 200A 48Vdc				2	2	3	3	3	3								
By-pass Contactor	10046674	Contactor CWM105DP-SB955										3	3	3	3	3			
RC Snubber	10190163	Wire Resistor 25R 50W 10%															3	3	3
	10190364	Polip. Capacitor 0.47µF 850V															3	3	3

* a) The 110Vac fan is used in the SSW06xxxxT5769ESH1Z
b) The 220Vac fan is used in the SSW06xxxxT5769ESH2Z

Table 8.5 - *Spare parts list line 575-690Vac*

OPTIONS AND ACCESSORIES

This chapter describes the options and accessories that can be used with the Soft-Starter SSW-06. These options and accessories are: Remote keypad and cables.

9.1 REMOTE KEYPAD AND CABLES

The keypad can be assembled either on the Soft-Starter or remotely. If using the remote keypad, the frame KMR-SSW-06 (frame for remote mounting) can be used. The advantage of using the frame is the appearance (aesthetic) of the remote keypad. The maximum cable length is 5m (16.40 ft). To acquire cables from WEG, see the following models.

Cable Length	WEG Part Nº
1m (3.28ft)	10050237
2m (6.56ft)	10050235
3m (9.84ft)	10050234
5m (16.40ft)	10050233

Table 9.1 *- Connection cables CAB-HMI SSW-06-X*

The keypad cable must be installed separately from the power cables, following the same recommendations as for the CCS6 control board (Refer to Section 3.2.8).
For assembling, see details in figure 9.2 and 9.3.

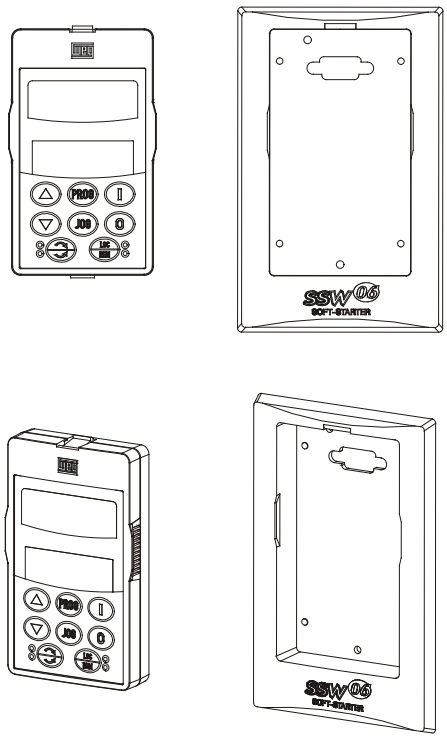

Figure 9.1 *- Keypad* and remote *keypad frame for panel installation*

NOTE!
Due to voltage drops in the Keypad cable, do not use cables longer than 5m (16.40ft).

a) Keypad Dimensions

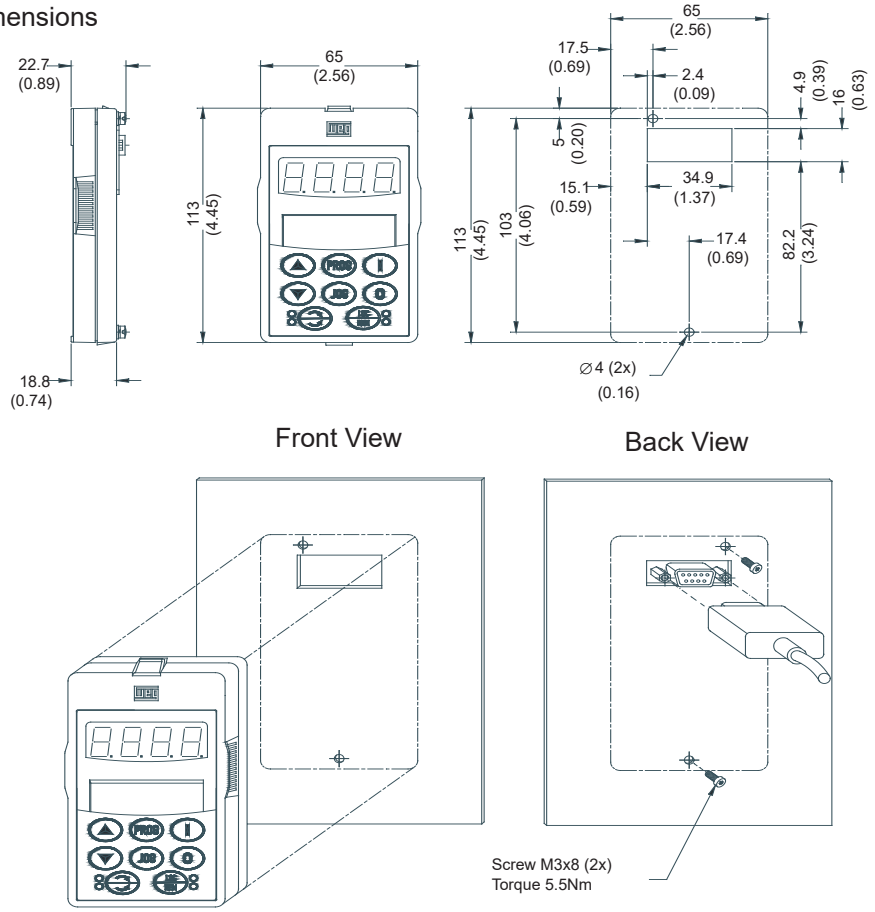

Figure 9.2 *- Dimensions in mm (in) and how to install the Keypad directly in the panel without the frame*

b) Dimension of frame with Keypad

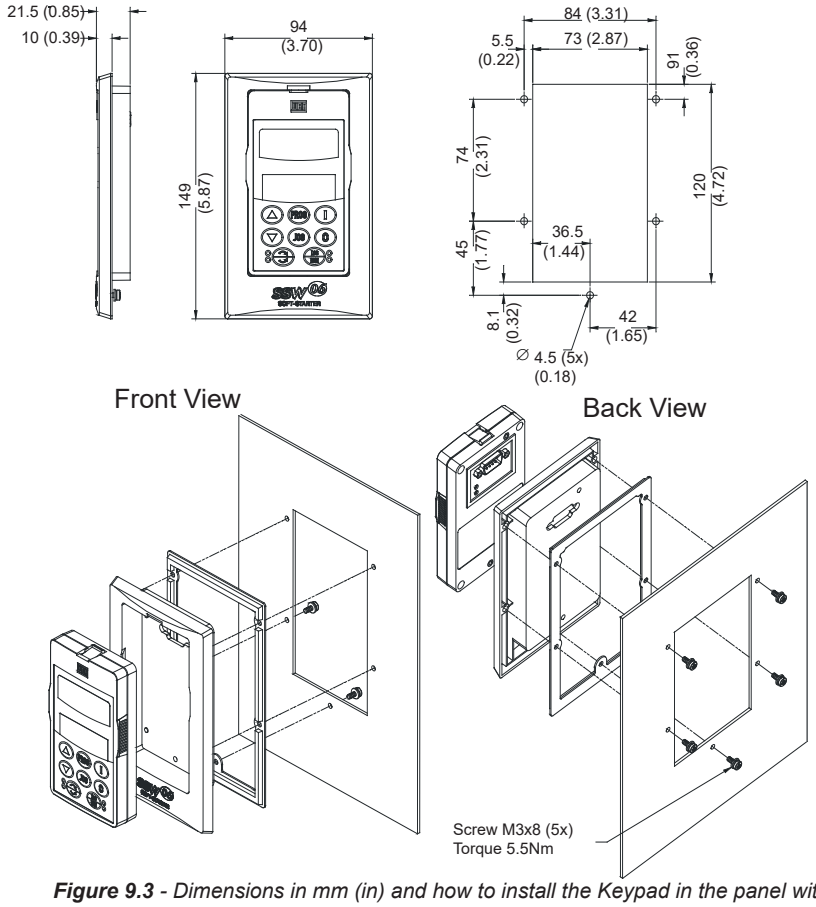

Figure 9.3 *- Dimensions in mm (in) and how to install the Keypad in the panel with frame*

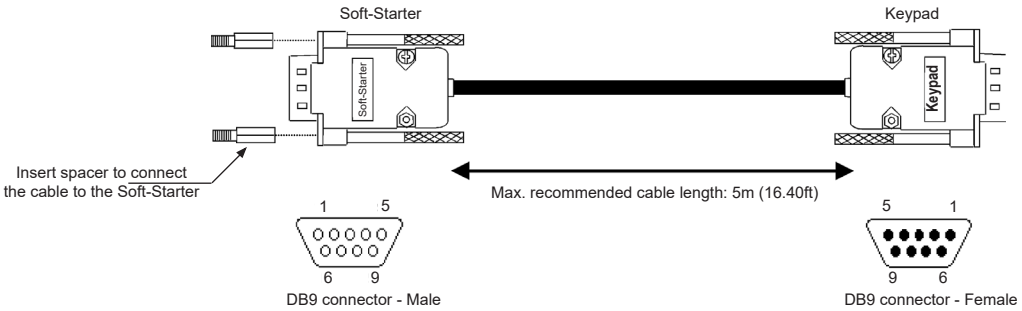

Figure 9.4 *- Cable for remote keypad connectiion*

Cable Connection	
Connection Pins Soft-Starter side	Connection Pins Keypad side
1	1
2	2
3	3
4	4
8	8
9= SHIELD	9= SHIELD

Table 9.2 *- Connection pins (DB9) for cables £ 5m (16.40ft) (the frame may be or not used)*

9.2 RS-485 for the Soft-Starter SSW-06

☑ When the RS-485 interface is used, the master can control several drives connected to the same bus. The Modbus-RTU protocol allows the connection of up to 247 slaves (1 slave per address), provided repeaters are also used along the bus. This interface ensures good noise immunity, allowing maximum cable length of up to 1000 m (3,300ft).

9.2.1 RS-485 Communication Kit (KRS-485)

☑ WEG Part Number: 10927208.
☑ Converter RS-232 to RS-485 with galvanic isolation.
☑ Connected inside the product (on the connector XC8 of the CCS6 control board).
☑ For more details, please refer to the Serial Communication Manual of the Soft-Starter SSW-06.

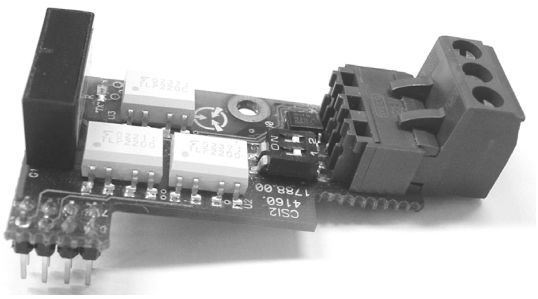

Figure 9.5 *- Optional board, RS-485, for the SSW-06*

9.2.2 Optional Module MIW-02

- ☑ WEG Part Number: 10051677.
- ☑ Converter RS-232 to RS-485 with galvanic isolation.
- ☑ Module outside the product, connected to the RS-232 interface of the SSW-06.
- ☑ For more details, please refer to the MIW-02 Manual.

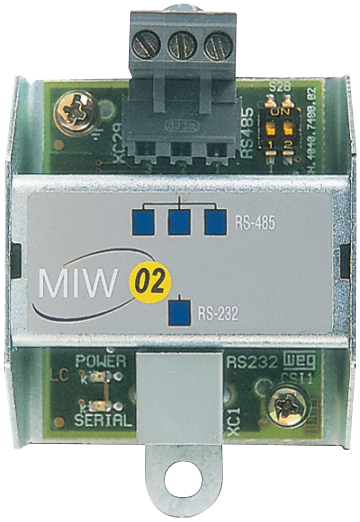

Figure 9.6 *- Optional module MIW-02*

9.3 FIELDBUS COMMUNICATION KITS

- ☑ To enable the Soft-Starter SSW-06 for Profibus DP or DeviceNet communication, the use of a communication board is required. This communication board is available as an optional kit.

9.3.1 Fieldbus DeviceNet Communication Kit (KFB-DN)

- ☑ WEG Part Number: 10935567.
- ☑ The communication protocol DeviceNet has been developed with the purpose to provide a fast, cyclic and deterministic communication between the master and slaves.
- ☑ For more details, please refer to the Fieldbus Communication Manual.

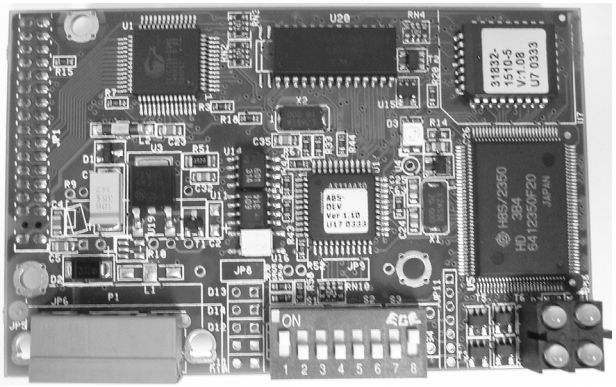

Figure 9.7 *- Board of the optional DeviceNet kit*

9.3.2 Fieldbus Profibus DP-V1 Communication Kit (KFB-PDPV1)

WEG Part Number: 10935654.

☑ The Profibus DP-V1 communication protocol is used to link controllers and industrial equipment, as sensors, valves, Soft-Starters, bar-code readers, frequency inverters, panels and operation interfaces.

☑ Refer to the Fieldbus communication Manual for more information.

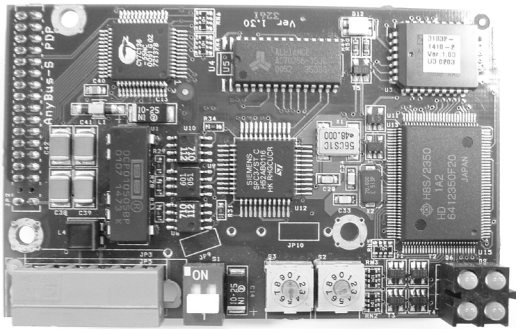

Figure 9.9 *- Profibus DP-V1 optional kit board*

9.3.3 Fieldbus DeviceNet Drive Profile Communication Kit (KFB-DD)

☑ WEG Part Number: 10935679.

☑ The communication protocol DeviceNet Drive Profile has been developed with the purpose to provide a fast, cyclic and acyclic communication between the master and slaves.

☑ For more details, please refer to the Fieldbus Communication Manual.

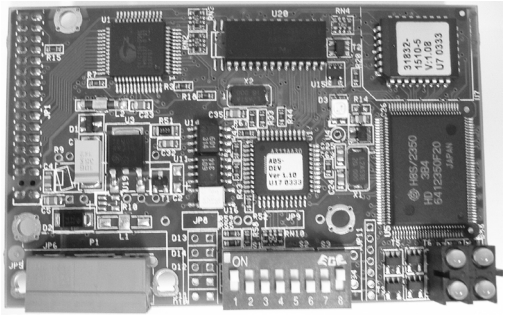

Figure 9.10 *- Board of the optional DeviceNet Drive Profile Kit*

9.3.4 Fieldbus EtherNet/IP or Modbus/TCP Communication Kit (KFB-ENIP)

☑ Weg Part Number: 11169535.

☑ EtherNet/IP or Modbus/TCP is a communication system proper for the industrial environment.

☑ For more details, please refer to the Fieldbus Communication Manual.

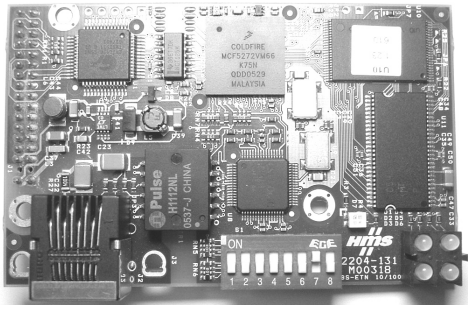

Figure 9.11 *- Board of the optional EtherNet/IP or Modbus/TCP Kit*

9.4 USB

☑ The Soft-Starter SSW-06 has a serial communication interface RS-232 with Modbus-RTU protocol available directly in the X2 connector of the control card CCS6.

☑ Through an optional converter this RS-232 serial interface can be converted to USB.

9.4.1 USB Communication Kit (K-USB)

☑ WEG Part Number: 11103210

☑ Converter RS-232 to USB.

☑ Connected internally in the product (connector XC8 of the control board CCS6).

☑ It consults the Manual of Serial Communication of Soft-Starter SSW-06 for more information.

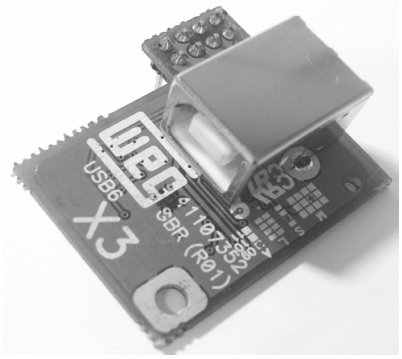

Figure 9.12 *- Optional USB card*

9.5 INPUTS AND OUTPUTS EXPANSION BOARD

☑ The Soft-Starter SSW-06 has six digital inputs, one PTC input, three outputs and two analogical outputs, available directly in the X1 connector of the control board, CCS6.

☑ Through connector XC6 of the control board, CCS6, optional boards can be placed to become enlarged these input and outputs.

9.5.1 Digital Inputs and Outputs Expansion Kit (K-IOE)

☑ WEG Part Number: 11103211

☑ Optional board with six digital inputs and six digital outputs, galvanically isolated, to be used with the SoftPLC.

☑ Connected internally in the product (connector XC6 of the control card CCS6).

☑ It consults the Manual of the SoftPLC and the Multimotores Application Guide for more information.

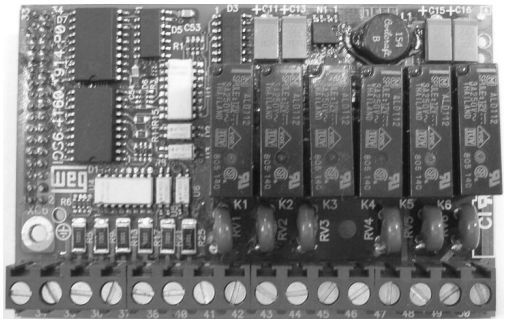

Figure 9.13 *- IOs expansion board*

NOTES!

1) If it uses this digital inputs and outputs expansion card it cannot be used the fieldbus communication boards (kits KFB).
2) This expansion board needs an external power supply to digital inputs and outputs (24Vdc/150mA).

9.5.2 PT100 Inputs Kit (K-PT100)

☑ WEG Part Number: 11479651.
☑ Optional board, with five PT100 inputs, galvanically isolated, to be used in the measurement of the motor temperature.
☑ Connected internally in the product (connector XC6 of the control board CCS6).

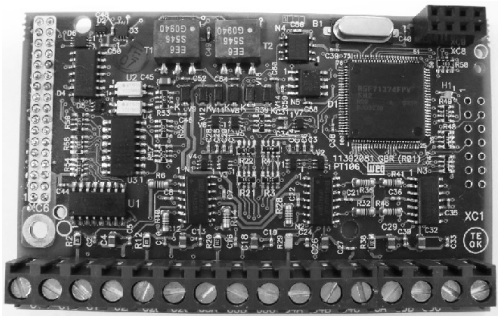

Figure 9.14 *- PT100 inputs optional board*

NOTE!

If it uses this motor temperature inputs board, than cannot be used the fieldbus communication board (kits KFB) or digital inputs and outputs expansion board (K-IOE).

9.6 EXTERNAL CURRENT ACQUISITION

☑ The Soft-Starter SSW-06 has three current transforms to reading, indication and protection of the motor, internally in the product.
☑ If it use, an external by-pass contactor, has necessity of placing the current transforms for external Soft-Starter SSW-06 side, to keep the same functions.

9.6.1 External Current Acquisition Kit (K-ECA)

☑ This kit is composed of current transforms, cables and connectors for external current acquisition for Soft-Starter SSW-06.

Figure 9.15 *- CTs to external current aquisition*

Model	WEG Part Number
255A	11106042
312A	11106045
365A	11106046
412A	11106098
480A	11106099
604A	11106103
670A	11106104
820A	11106105
950A	11106106
1100A	11106107
1400A	11106119

Table 9.3 *- External Current Acquisition Kits*

TECHNICAL SPECIFICATIONS

This Chapter describes the technical specifications (electrical and mechanical) of the Soft-Starters SSW-06.

10.1 CURRENTS AND RATINGS ACCORDING TO UL508

Model	55ºC	55ºC							
	Nominal Current 3xIn @ 30s	220/230V		380/400V		440/460V		575V	
	A	Hp	kW	Hp	kW	Hp	kW	Hp	kW
SSW-06.0010	10	3	2.2	5	3.7	5	3.7	7.5	5.5
SSW-06.0016	16	5	3.7	7.5	5.5	10	7.5	10	7.5
SSW-06.0023	23	7.5	5.5	10	7.5	15	11	20	15
SSW-06.0030	30	10	7.5	15	11	20	15	25	18.5
SSW-06.0045	45	15	11	25	18.5	30	22	40	30
SSW-06.0060	60	20	15	30	22	40	30	50	37
SSW-06.0085	85	30	22	50	37	60	45	75	55
SSW-06.0130	130	50	37	75	55	100	75	125	90
SSW-06.0170	170	60	45	100	75	125	90	150	110
SSW-06.0205	205	75	55	100	75	150	110	200	150
SSW-06.0255	255	100	75	150	110	200	150	250	185
SSW-06.0312	312	125	90	175	130	250	185	300	225
SSW-06.0365	365	150	112	200	150	300	225	350	260
SSW-06.0412	412	150	112	250	185	350	260	450	330
SSW-06.0480	480	200	150	300	225	400	300	500	370
SSW-06.0604	604	250	185	350	260	500	370	600	450
SSW-06.0670	670	250	185	400	300	550	410	650	485
SSW-06.0820	820	300	225	500	370	600	450	750	550
SSW-06.0950(1)	950	350	260	600	450	700	525	850	630
SSW-06.1100(1)	1100	450	330	700	525	800	600	1000	750
SSW-06.1400(1)	1400	500	370	900	670	1050	775	1350	1000

(1) Power valid for room temperature of 40ºC.

Table 10.1 *- Powers and currents for standard connection with three cables according to UL508 (Room Temperature of 55ºC)*

Model	55ºC	55ºC							
	Nominal Current 3xIn @ 25s	220/230V		380/400V		440/460V		575V	
	A	Hp	kW	Hp	kW	Hp	kW	Hp	kW
SSW-06.0010	-	-	-	-	-	-	-	-	-
SSW-06.0016	-	-	-	-	-	-	-	-	-
SSW-06.0023	-	-	-	-	-	-	-	-	-
SSW-06.0030	-	-	-	-	-	-	-	-	-
SSW-06.0045	77	25	18.5	40	30	60	45	75	55
SSW-06.0060	103	30	22	60	45	75	55	100	75
SSW-06.0085	147	50	37	75	55	100	75	150	110
SSW-06.0130	225	75	55	125	90	150	110	200	150
SSW-06.0170	294	100	75	150	110	200	150	300	225
SSW-06.0205	355	125	90	200	150	250	185	350	260
SSW-06.0255	441	150	110	250	185	350	260	450	330
SSW-06.0312	540	200	150	300	225	450	330	550	410
SSW-06.0365	631	250	185	350	260	500	370	650	485
SSW-06.0412	713	250	185	450	330	550	410	750	550
SSW-06.0480	831	350	260	550	410	650	485	850	630
SSW-06.0604	1046	450	330	700	525	800	600	1100	800
SSW-06.0670	1160	450	330	850	630	900	670	1200	900
SSW-06.0820	1420	550	410	1000	750	1150	820	1500	1200
SSW-06.0950(1)	1645	650	485	1150	820	1350	1000	1750	1290
SSW-06.1100(1)	1905	800	600	1350	1000	1600	1175	2000	1475
SSW-06.1400(1)	2424	1000	750	1750	1290	2000	1475	2500	1850

(1) Power valid for room temperature of 40ºC.

Table 10.2 *- Powers and currents for inside delta motor connection with six cables according to UL508 (Room Temperature of 55ºC)*

NOTE!

Maximum ratings indicated in tables 10.1 and 10.3 are based on 3 x SSW-06 Soft-Starter Nominal Current during 30s and 10 starts per hour (3xIn@30s) from 10A to 820A models and 5 starts per hour (3xIn @30s) from 950A to 1400A models.

10.2 CURRENTS AND RATINGS FOR IP55 IV POLE WEG MOTOR

Model	55ºC	55ºC											
	Nominal Current 3xIn @ 30s	220/230V		380/400V		440/460V		525V		575V		690V	
	A	Hp	kW	Hp	kW	Hp	kW	Hp	kW	Hp	kW	Hp	kW
SSW-06.0010	10	3	2.2	6	4.5	7.5	5.5	7.5	5.5	10	7.5	-	-
SSW-06.0016	16	5	3.7	10	7.5	12.	9.2	12.5	9.2	15	11	-	-
SSW-06.0023	23	7.5	5.5	15	11	15	11	20	15	20	15	-	-
SSW-06.0030	30	10	7,5	20	15	20	15	25	18.5	30	22	-	-
SSW-06.0045	45	15	11	30	22	30	22	40	30	40	30	50	37
SSW-06.0060	60	20	15	40	30	40	30	50	37	60	45	75	55
SSW-06.0085	85	30	22	60	45	60	45	75	55	75	55	100	75
SSW-06.0130	130	50	37	75	55	100	75	125	90	125	90	150	110
SSW-06.0170	170	60	45	125	90	125	90	150	110	175	132	220	165
SSW-06.0205	205	75	55	150	110	150	110	200	150	200	150	250	185
SSW-06.0255	255	100	75	175	132	200	150	250	185	250	185	340	250
SSW-06.0312	312	125	90	200	150	250	185	300	220	300	225	430	320
SSW-06.0365	365	150	110	250	185	300	225	350	260	400	300	470	350
SSW-06.0412	412	150	110	300	220	350	260	440	315	450	330	500	370
SSW-06.0480	480	200	150	350	260	400	300	500	370	500	370	600	450
SSW-06.0604	604	250	185	450	330	500	370	600	450	650	485	750	550
SSW-06.0670	670	250	185	500	370	550	410	650	485	750	550	850	630
SSW-06.0820	820	350	260	550	410	700	525	800	600	850	630	1000	750
SSW-06.0950(1)	950	400	300	750	550	800	600	900	670	1050	775	1150	860
SSW-06.1100(1)	1100	450	330	800	600	900	670	1100	810	1200	900	1300	1000
SSW-06.1400(1)	1400	550	410	1000	750	1200	900	1400	1050	1500	1100	1700	1250

(1) Power valid for room temperature of 40ºC.

Table 10.3 *- Powers and currents for standard connection with three cables according to WEG motors (Room Temperature of 55ºC)*

Model	55ºC	55ºC									
	Nominal Current 3xIn @ 25s	220/230V		380/400V		440/460V		525V		575V	
	A	Hp	kW	Hp	kW	Hp	kW	Hp	kW	Hp	kW
SSW-06.0010	-	-	-	-	-	-	-	-	-	-	-
SSW-06.0016	-	-	-	-	-	-	-	-	-	-	-
SSW-06.0023	-	-	-	-	-	-	-	-	-	-	-
SSW-06.0030	-	-	-	-	-	-	-	-	-	-	-
SSW-06.0045	77	30	22	50	37	60	45	75	55	75	55
SSW-06.0060	103	40	30	75	55	75	55	100	75	100	75
SSW-06.0085	147	60	45	100	75	125	90	125	90	150	110
SSW-06.0130	225	75	55	150	110	175	132	200	150	250	185
SSW-06.0170	294	125	90	200	150	200	150	250	185	300	220
SSW-06.0205	355	150	110	250	185	300	220	300	220	350	260
SSW-06.0255	441	175	132	300	225	350	260	400	300	450	330
SSW-06.0312	540	200	150	350	260	450	330	500	370	550	410
SSW-06.0365	631	250	185	450	330	500	370	600	450	650	485
SSW-06.0412	713	250	185	500	370	600	450	700	525	800	600
SSW-06.0480	831	350	260	600	450	700	525	800	600	900	670
SSW-06.0604	1046	450	330	750	550	850	630	1050	775	1150	820
SSW-06.0670	1160	500	370	850	630	950	700	1150	820	1250	920
SSW-06.0820	1420	600	450	1000	750	1200	900	1400	1050	1550	1140
SSW-06.0950(1)	1645	700	520	1200	900	1400	1030	1650	1200	1800	1325
SSW-06.1100(1)	1905	800	600	1400	1030	1600	1175	1900	1400	2100	1550
SSW-06.1400(1)	2424	1050	775	1750	1290	2000	1475	2450	1800	2650	1950

(1) Power valid for room temperature of 40ºC.

Table 10.4 *- Powers and currents for inside delta motor connection with six cables according to WEG motors (Room Temperature of 55ºC)*

NOTE!

Maximum ratings indicated in tables 10.2 and 10.4 are based on 3 x SSW-06 Soft-Starter Nominal Current during 25s and 10 starts per hour (3xIn@ 25s) from 10A to 820A models and 5 starts per hour (3xIn @25s) from 950A to 1400A models.

10.3 POWER DATA

Supply	Power voltage AC input (R/1L1, S/3L2, T/5L3)	☑ (220 to 575)Vac (-15% to +10%), or (187 to 632)Vac ☑ (575 to 690)Vac (-15% to +10%) or (489 to 759)Vac
	Frequency	☑ 50 to 60Hz (± 10 %), or (45 to 66)Hz
Capacity	Maximum number of starts per hour	☑ 10 (1 every 6 minutes) Models 10A to 820A. ☑ 5 (1 every 12 minutes) Models 950A to 1400A.
	Starting Cycle	☑ Standard motor connection 2 x InSSW during 60s 3 x InSSW during 30s 4.5 x (InSSW x 2/3) during 30s ☑ Inside delta motor connection 2 x InSSW during 50s 3 x InSSW during 25s 4.5 x (InSSW x 2/3) during 25s
Thyristors (SCRs)		☑ Maximum reverse peak voltage 1600V
Overvoltage Category		☑ III (UL508/EN61010)

10.4 ELECTRONICS/PROGRAMMING DATA

Supply	Control Voltage Connector X1A (1,2)	☑ (110 to 230)Vac (-15% to +10%), or (94 to 253)Vac
	Frequency	☑ (50 to 60)Hz (± 10 %), or (45 to 66)Hz
	Consumption	☑ 280mA Maximum
Control	Method	☑ Voltage Ramp; ☑ Current Limit; ☑ Pump Control; ☑ Torque Control; ☑ Current Control.
Inputs	Digitals	☑ 5 isolated digital inputs; ☑ Minimum high level: 18Vdc; ☑ Maximum low level: 3Vdc; ☑ Maximum Voltage: 30Vdc; ☑ Input Current: 11mA @ 24Vdc; ☑ Programmable functions.
	Motor Thermistor Input	☑ 1 input for motor thermistor; ☑ Actuation: 3k9Ω Release: 1k6Ω; ☑ Minimum resistance: 100Ω; ☑ PTCB referenced to the DGND through 249Ω resistor.
Outputs	Analogs	☑ 1 analog output, not isolated, (0 to +10)V, RL ≥ 10kΩ (maximum load); ☑ Resolution: 11bits; ☑ Programmable functions.
		☑ 1 analog output, not isolated,(0 to 20)mA/(4 to 20)mA, RL=500Ω/1%@10V; ☑ Resolution: 11bits; ☑ Programmable functions.
	Relay	☑ 2 relays with NO-contacts, 240Vac, 1A, programmable functions; ☑ 1 relay with NO/NC-contact, 240Vac, 1A, programmable functions.

10.4 ELECTRONICS/PROGRAMMING DATA (CONT.)

Safety	Protections	☑ Overcurrent; ☑ Undercurrent; ☑ Overvoltage; ☑ Undervoltage; ☑ Phase loss; ☑ Reversed phase sequence; ☑ Overtemperature of heatsink; ☑ Motor overload; ☑ External fault; ☑ Open By-pass contact (when Soft-Starter is fitted with internal By-pass); ☑ Overcurrent before By-pass (when Soft-Starter is fitted with internal By-pass); ☑ CPU Error; ☑ Keypad communication error. ☑ Programming error;
Keypad	HMI-SSW06	☑ 8 keys: Enable / Disable, Increment, Decrement, Direction of Rotation, Jog, Local/ Remote and Programming; ☑ LCD-Display, 2 lines x 16 columns and 7 segments 4 digits LED display ☑ Led's for indication of the direction of rotation and indication on the Mode of Operation (LOCAL/REMOTE); ☑ Permits access/changing of all parameters; ☑ External mounting is possible, cables up to 5m (16.40ft) are available.

10.5 MECHANICAL DATA

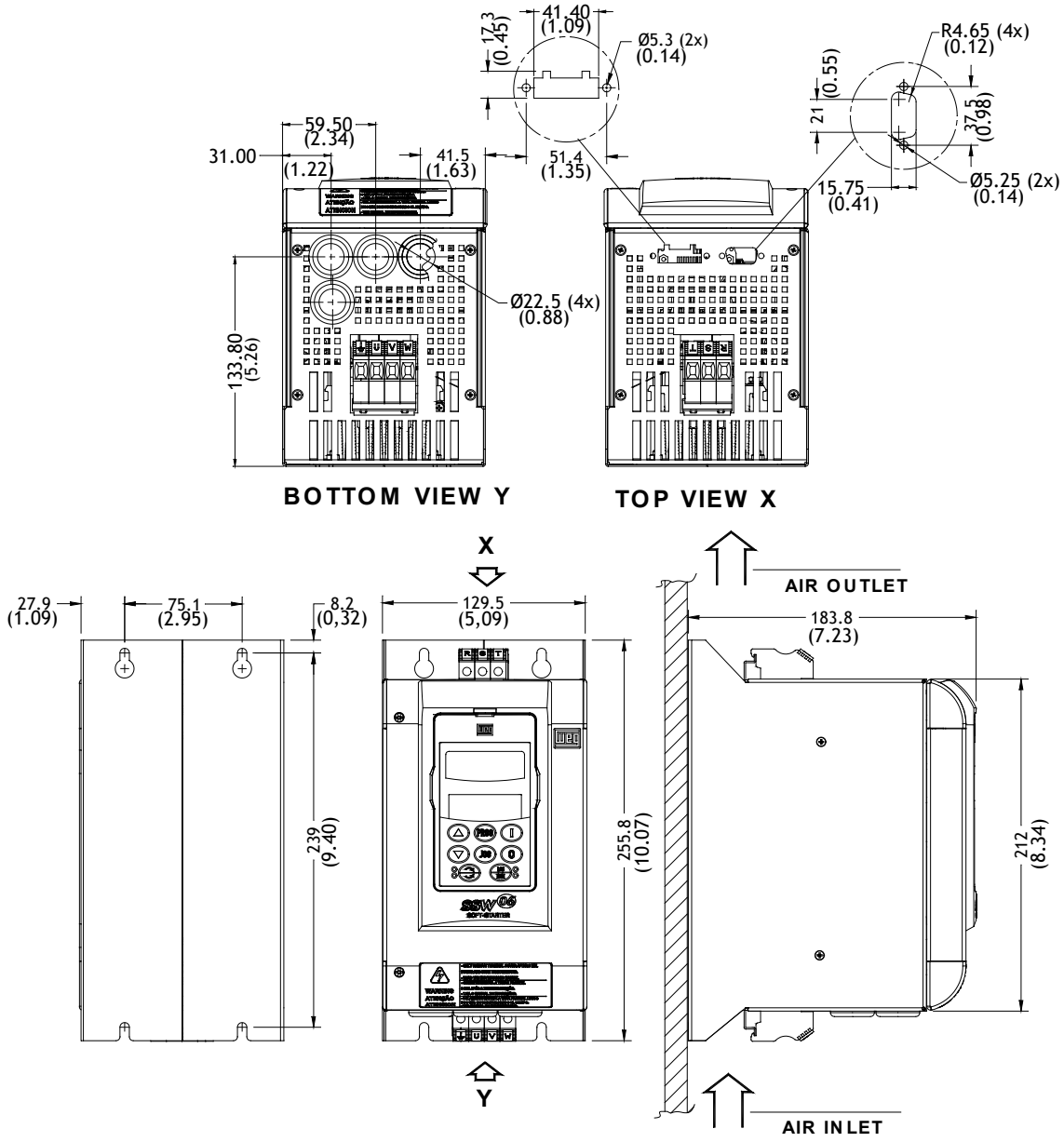

* Dimensions in mm(in)

Figure 10.1 *- 10A to 30A models*

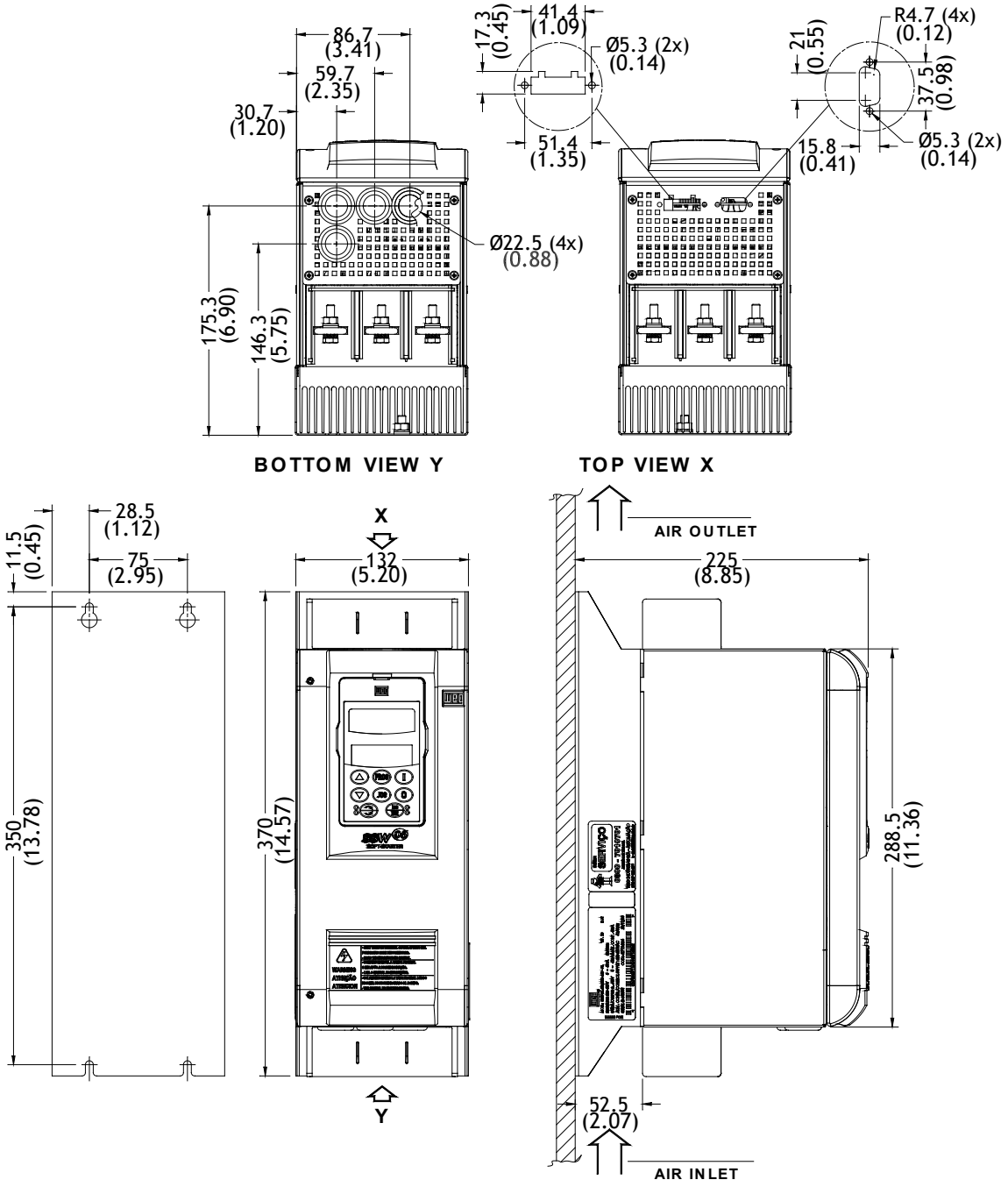

* Dimensions in mm(in)

Figure 10.2 *- 45A to 130A models (220 - 575V) or 45A to 85A models (575 - 690V)*

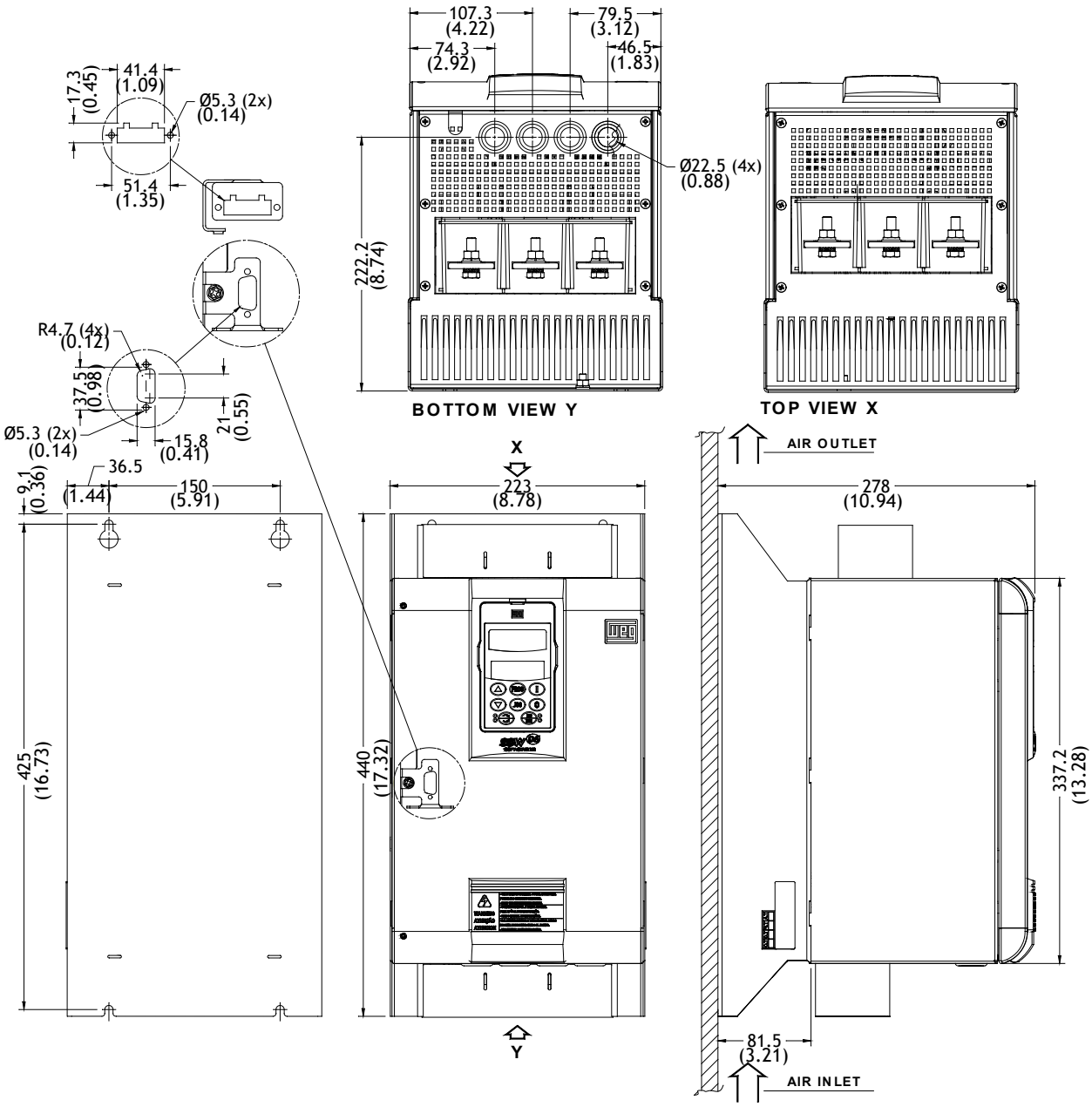

* Dimensions in mm(in)

Figure 10.3 *- 170A and 205A models (220 - 575V) or 130A and 170A models (575 - 690V)*

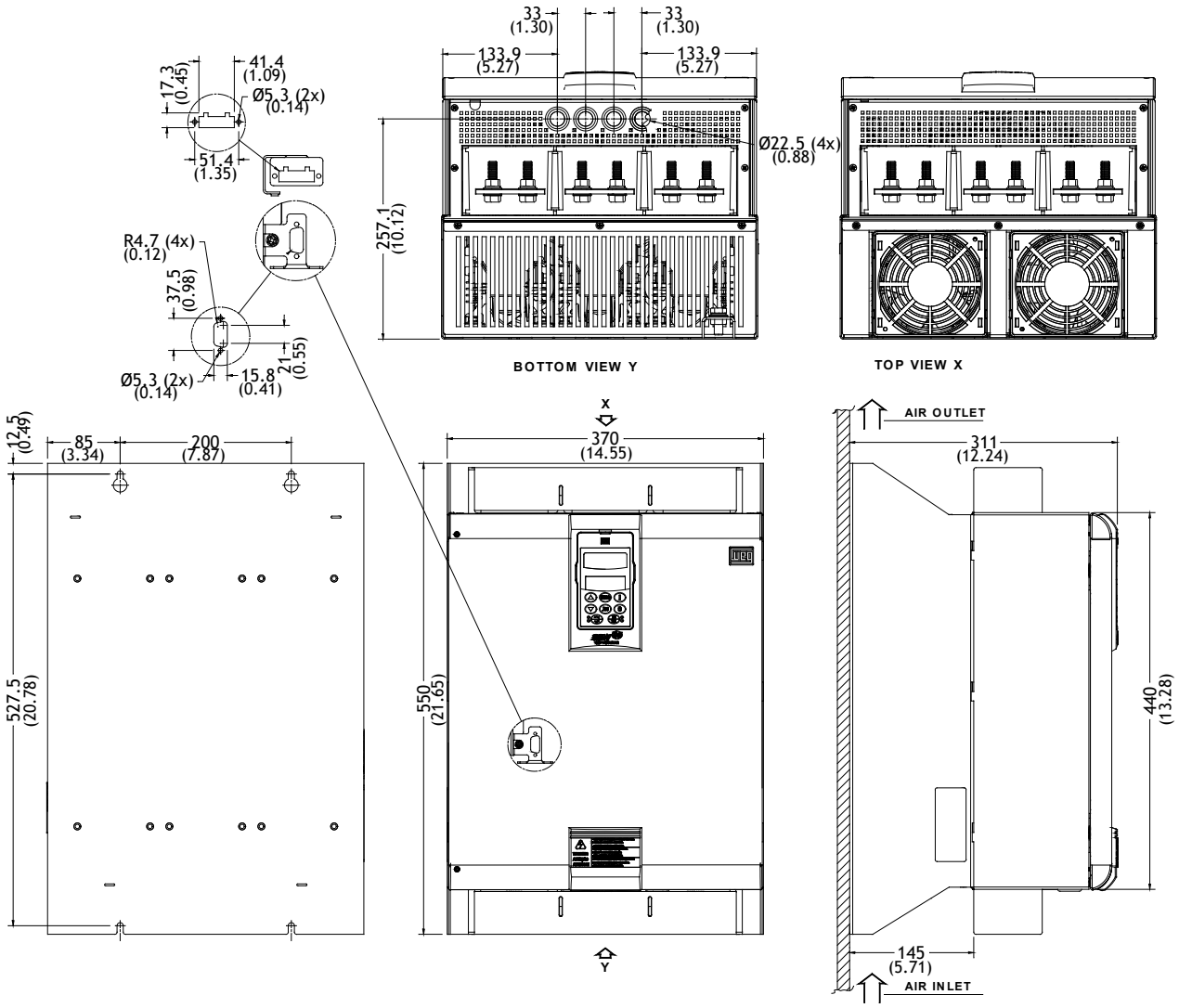

* Dimensions in mm(in)

Figure 10.4 *- 255A to 365A models (220 - 575V) or 205A to 365A models (575 - 690V)*

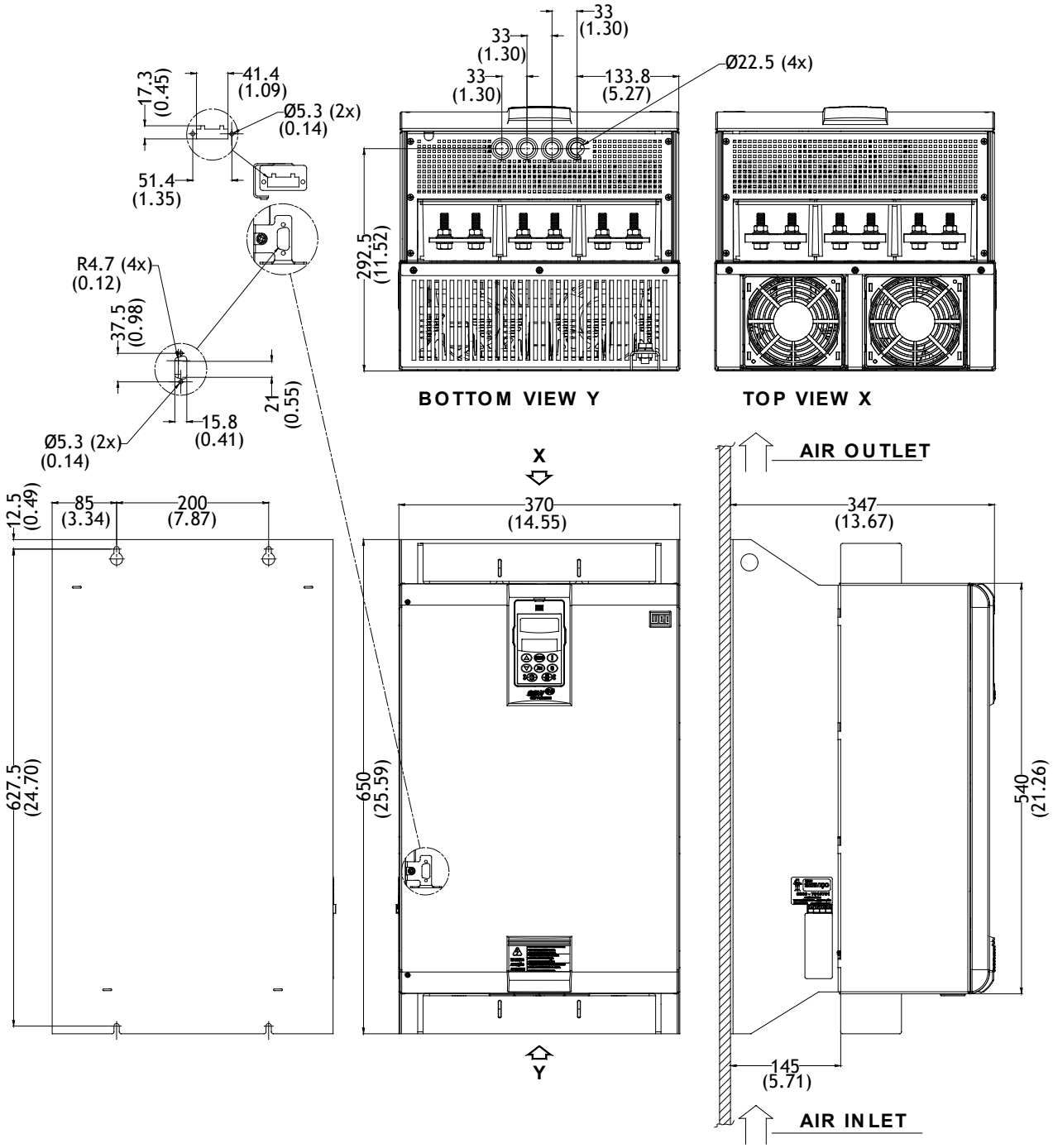

* Dimensions in mm(in)

Figure 10.5 *- 412A to 604A models*

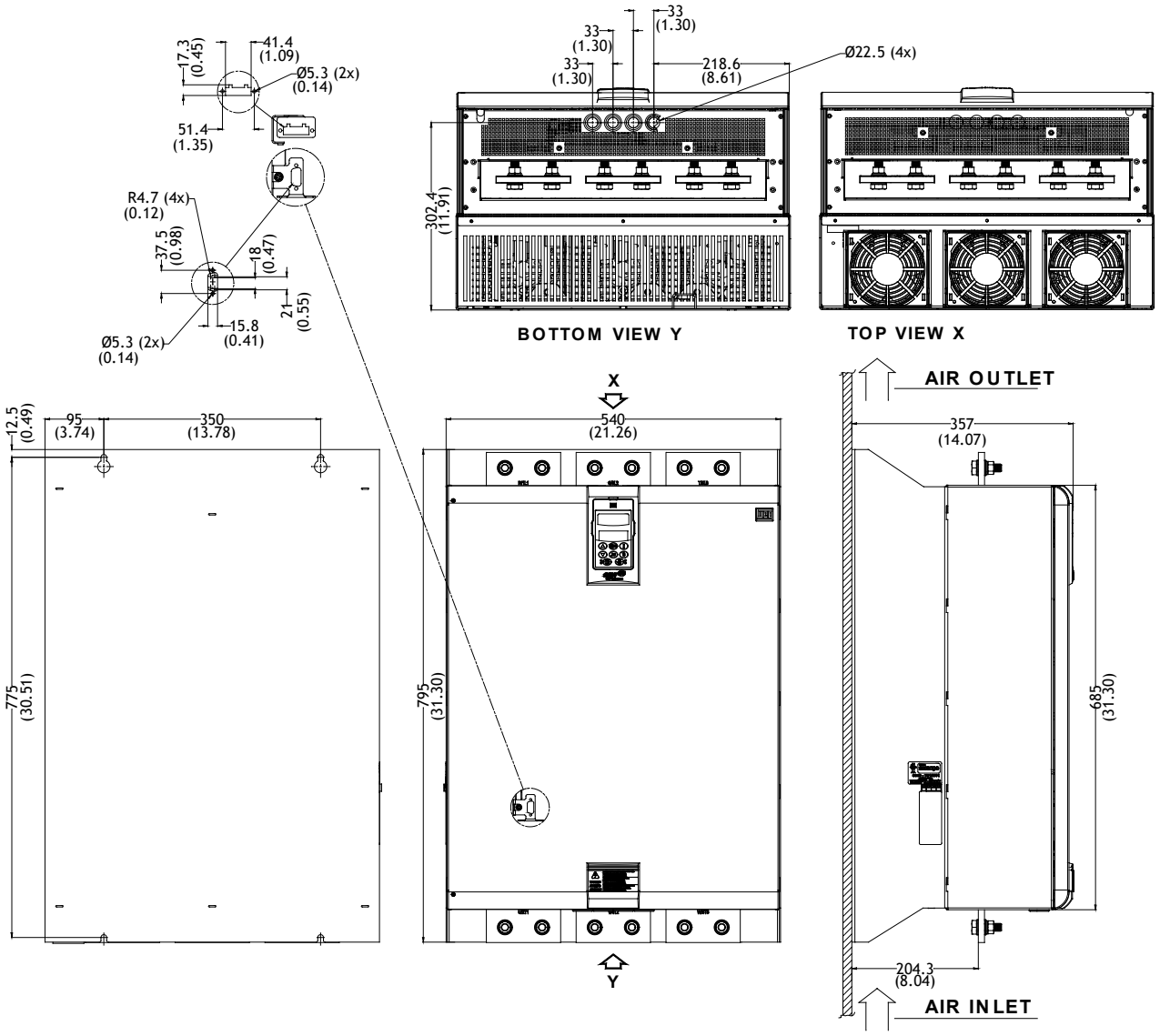

* Dimensions in mm(in)

Figure 10.6 *- 670A and 820A models*

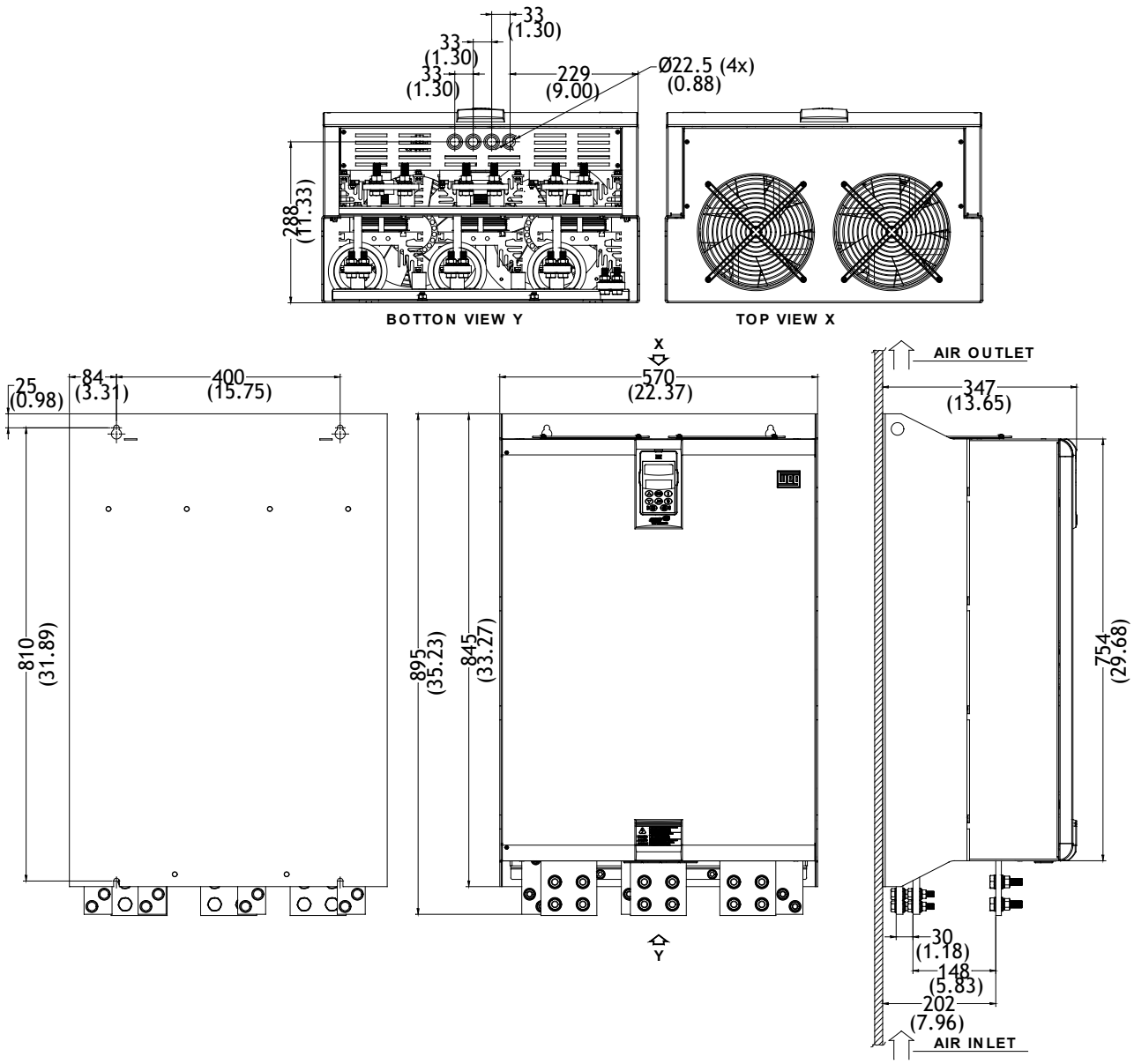

* Dimensions in mm(in)

Figure 10.7 *- 950A models*

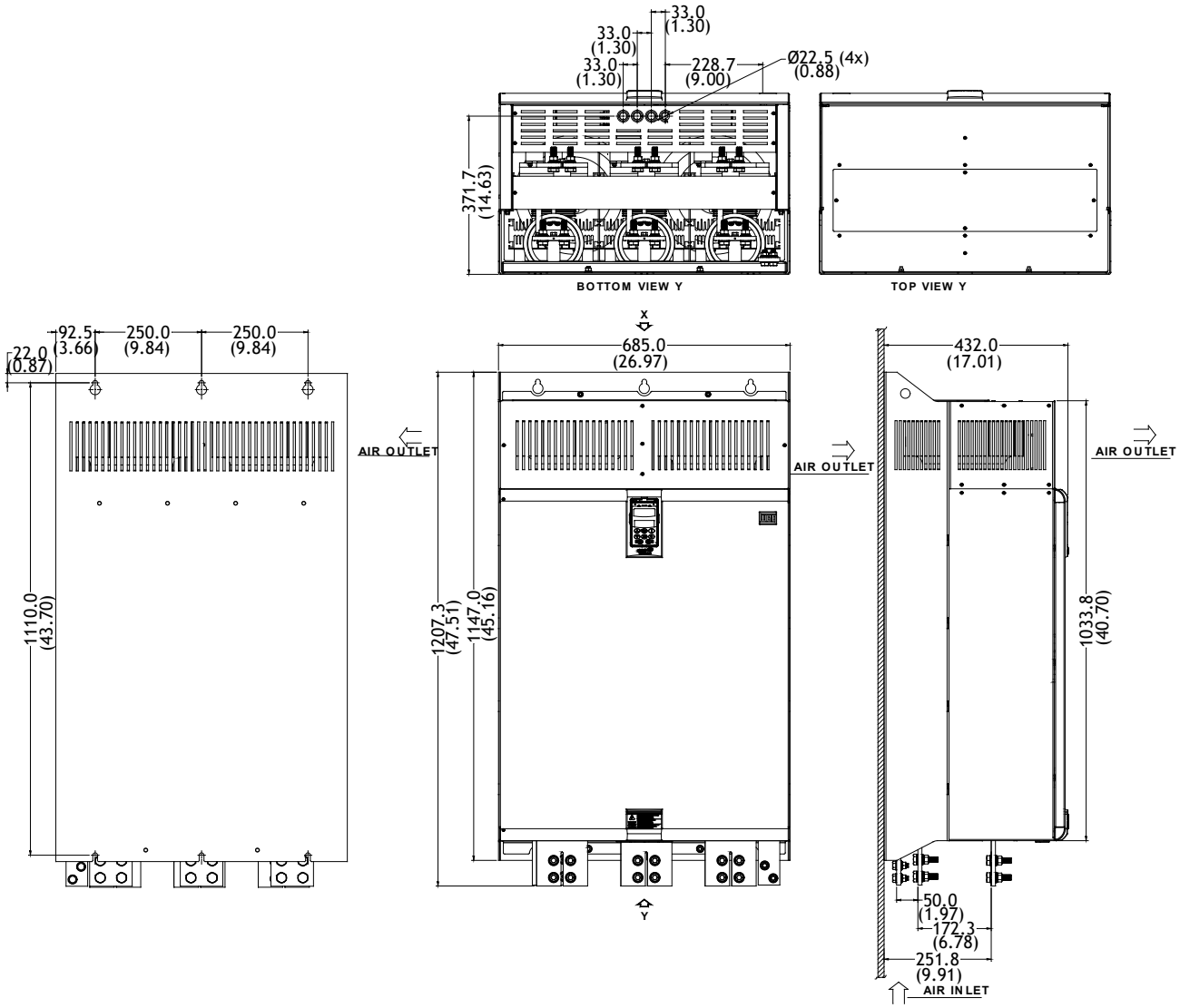

* Dimensions in mm(in)

Figure 10.8 *- 1100A and 1400A models*