Driving efficiency and sustainability

# Three-Phase Motors

## W30 Smart EC Frame IEC 132 / NEMA 210

### Installation, Operation and Maintenance Manual

# Installation, Operation and Maintenance Manual

## W30 Smart EC Frame IEC 132 / NEMA 210

Language: English

Document: 50143194

Revision: 04

Date: 10/2026

1 GENERAL INFORMATION ..... 1-1
1.1 WARNINGS IN THIS MANUAL ..... 1-1

2 SAFETY MEASURES ..... 2-1

3 SHIPMENT, STORAGE AND HANDLING ..... 3-1

4 IDENTIFICATION LABELS ..... 4-1

5 INSTALLATION ..... 5-1
5.1 POWER CONNECTIONS ..... 5-3
5.2 CONTROL CONNECTIONS ..... 5-4
5.2.1 Terminal Blocks Naming and Switches ..... 5-4
5.2.1.1 XC10 Connector ..... 5-5
5.2.1.2 XC11 Connector ..... 5-6
5.2.1.3 XC14 Connector ..... 5-6
5.2.1.4 XC13 Connector ..... 5-7
5.2.2 Quick Start ..... 5-7
5.3 EMC REQUIREMENTS FOR CONFORMING INSTALLATIONS ..... 5-7

6 OPERATION INSTRUCTIONS ..... 6-1
6.1 RUN- STOP ..... 6-1
6.2 SELECTING THE ROTATION DIRECTION ..... 6-1
6.3 HOW TO ADJUST SPEED ..... 6-1
6.4 PRODUCT STANDARD FEATURES AND CONTROL REFERENCE ..... 6-3
6.5 FIRE MODE FUNCTION (OPTIONAL) ..... 6-3
6.6 SERIAL COMMUNICATION ..... 6-4
6.6.1 Interfaces to Access Parameters ..... 6-5
6.6.1.1 Computer ..... 6-5
6.6.1.2 Human Machine Interface (HMI) ..... 6-6
6.6.1.3 Bluetooth ..... 6-6

7 PRODUCT PROTECTION AND FAULT DIAGNOSIS ..... 7-1
7.1 SAFETY FUNCTIONS ..... 7-1
7.2 INFORMATION FOR CONTACTING TECHNICAL SUPPORT ..... 7-1

8 MAINTENANCE ..... 8-1

9 ENVIRONMENTAL INFORMATION ..... 9-1

10 ADDITIONAL INFORMATION ..... 10-1
10.1 WARRANTY TERM ..... 10-1

11 TECHNICAL SPECIFICATIONS ..... 11-1
11.1 POWER SUPPLY ..... 11-1
11.2 VENTILATION SYSTEM ..... 11-1
11.3 STANDARDS AND DIRECTIVES ..... 11-1

**Read carefully this manual before installing and configuring the equipment**

The objective of this manual is to provide important information, which must be considered during the shipment, storage, installation, operation and maintenance of WEG motors. Therefore, we advise to make a careful and detailed study of the instructions contained herein before performing any procedures on the motor. Failure to follow the instructions in this manual and on the website www.weg.net voids the product warranty and may result in serious personal injury and material damage. For further information or explanations, check our FAQ at **www.weg.net/br/faq.**

The instructions presented in this document are valid for: W30 Smart EC products.

# 1 GENERAL INFORMATION

The W30 Smart EC product is an Electronically Commutated (EC) Motor, consisting of a permanent magnet motor and a drive with features customized for ventilation solutions.

This Manual contains only the required information that allows qualified and trained personnel to carry out their services.

The product images are shown for illustrative purpose only.

## 1.1 WARNINGS IN THIS MANUAL

**DANGER!**
The procedures recommended in this warning have the purpose of protecting the user against death, serious injuries and considerable material damage.

**ATTENTION!**
The procedures recommended in this warning have the purpose of avoiding material damage.

**NOTE!**
The information mentioned in this warning is important for the proper understanding and good operation of the product.

# 2 SAFETY MEASURES

Only trained personnel with the proper qualifications, and who are familiar with this type of equipment and associated machinery, should plan and carry out the installation, startup, operation, and maintenance of this equipment. Personnel must follow all safety instructions provided in this manual and/or defined by local regulations.

**ATTENTION!**
Any service on the internal parts of the motor must be performed by qualified personnel only, since, due to the attraction between metallic parts caused by the magnets, risk of accident is present both in the assembly and disassembly of the motor.

**ATTENTION!**
Contains permanent magnets. For pacemaker users, it is recommended to avoid close or prolonged contact with this product, as it may interfere with the proper operation of the device.

**DANGER!**
Always disconnect the main power supply before touching any electrical device associated with the product. Several components may remain charged with high voltage and/or in movement and may cause injuries to people, even after the AC power supply has been disconnected or turned off. Wait at least 10 minutes to guarantee the fully discharge of capacitors. Always connect the equipment to the ground protection (PE).

# 3 SHIPMENT, STORAGE AND HANDLING

Check the conditions of the motor immediately upon receipt. Where any damage is noticed, this must be reported in writing to the transportation company, and immediately communicated to the insurance company and to WEG. In this case, no installation job can be started before the detected problem has been solved.

Check if the nameplate data matches the invoice data and the environmental conditions in which the motor will be installed. If the motor is not immediately installed, it must be stored in a clean and dry room protected against dust, vibrations, gases and corrosive agents, and with temperature between -25 ºC and 60 ºC and relative humidity not exceeding 60 %.

If the motors are stored for more than two years, it is recommended to change the bearings, or to remove, wash, inspect and relubricate them before the motor is started.

To preserve the electrolytic capacitor in the circuit, power only the drive through the power lead inputs without turning the motor. If the drive is stocked (out of operation), every year from the manufacturing date indicated on the identification label of the drive (page 5), supply the drive with three-phase voltage between 220 and 277 Vac, 50 or 60 Hz, for at least one hour then de-energize and wait for at least 24 hours before using the drive. If the drive has been in operation for at least 10 years, it is recommended to replace it. For instructions, contact WEG technical support.

**DANGER!**

- Always handle the motor carefully in order to prevent personal injuries and impacts that could damage the bearings.
- When available, do not lift and/or carry the product holding by the input cables.
- When available, use only the eyebolts to lift the motor. However, these eyebolts are designed for the motor weight only. Thus, never use these eyebolts to lift the motor with additional loads coupled to it. For multimounting motors (with removable feet/ base), the eyebolts must be positioned according to the motor mounting position so that the lifting angle is vertically aligned (lifting at 0 º).
- Additional information regarding the maximum allowable angle-of-inclination is indicated in the general manual 50033244 available on the website **www.weg.net**.

# 4 IDENTIFICATION LABELS

There is one nameplate with general product information on the W30 Smart EC product that is affixed to the side of the motor frame and one label with basic electronic information that is affixed to the drive (back cover).

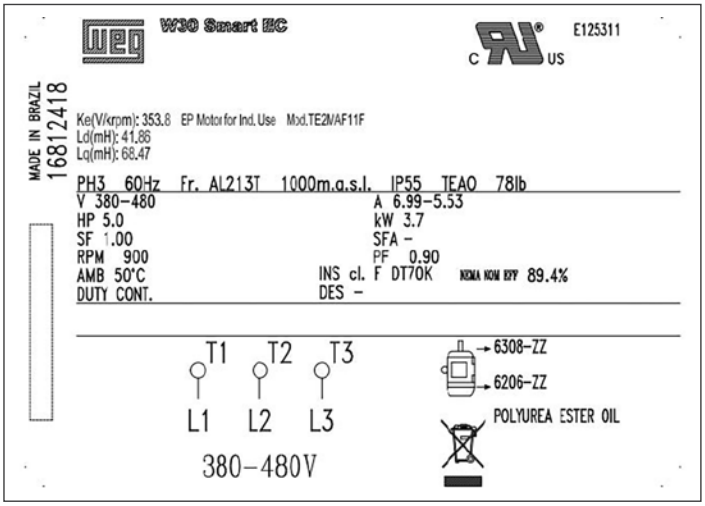


*Figure 4.1: Nameplate*

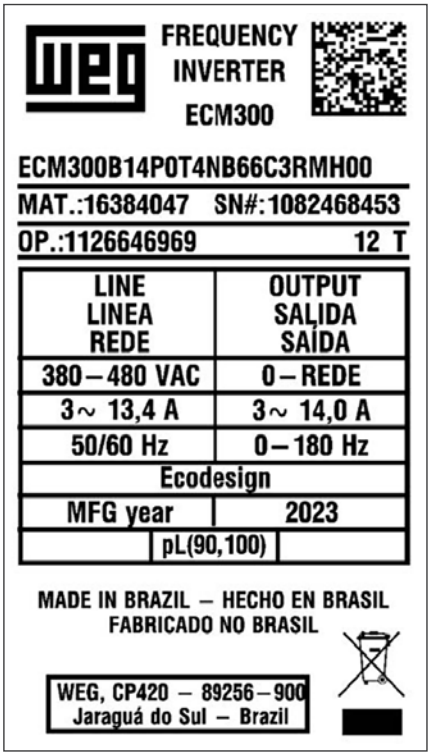


*Figure 4.2: Drive label*

# 5 INSTALLATION

**DANGER!**

- Make sure the AC power supply is disconnected and protected against accidental energization before starting the installation.
- Check the motor direction of rotation, turning it without load before it is coupled to the load.
- To prevent accidents, ensure that the grounding connection has been performed according to the applicable standards and that the shaft key has been securely fastened before the motor is started.
- When available, do not lift and/or carry the product holding by the input cables.

Motors with feet must be installed on properly designed bases to prevent vibrations and ensure perfect alignment. The motor shaft must be precisely aligned with the shaft of the driven machine. Incorrect alignment, as well as improper belt tension, will likely damage the bearings, leading to excessive vibrations and potentially causing the shaft to rupture. The permissible radial and axial loads for standard bearings are specified in Table 5.1 on page 5-1. Use flexible couplings whenever possible.

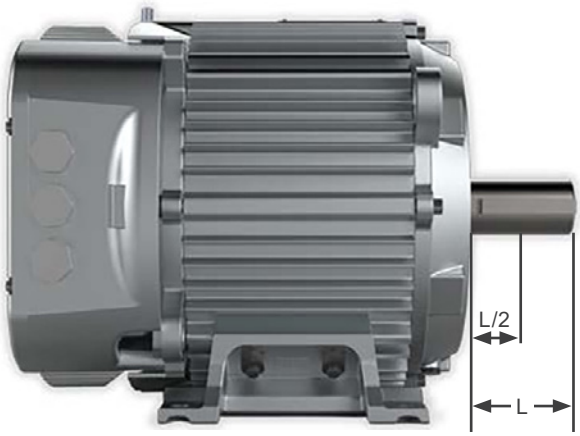


*Figure 5.1: Radial thrust on motor shaft*

Permissible loads for W30 Smart EC motors based on maximum speed:

*Table 5.1: Maximum permissible thrust - Fr in (kN) 30000 hours*

| Direction | Mounting Position | Type | 900 / 1200 rpm | 1500 / 1800 rpm |
|---|---|---|---|---|
| | | | Force (kN) | Force (kN) |
| Axial (1) | Horizontal | Pushing | 2.50 | 2.15 |
| | | Pulling | 1.70 | 1.35 |
| | Vertical shaft down | Pushing | 2.70 | 2.40 |
| | | Pulling | 1.55 | 1.20 |
| | Vertical shaft up | Pushing | 2.35 | 2.00 |
| | | Pulling | 1.90 | 1.55 |
| Radial (2) | All | L | 2.00 | 1.80 |
| | | L/2 | 2.35 | 2.00 |

**Notes:**
(1) Axial maximum load (radial zero).
(2) Radial maximum load (axial zero).

1. All belt loads are considered to act in vertically downward direction in relation to feet.

2. Overhung loads include belt tension and weight of sheave.

3. Overhung load limits do not include any effect of unbalanced magnetic pull.

Only remove the corrosion protection grease from the shaft end and flange immediately before the motor installation.

Unless specified otherwise in the purchase order, WEG motors are dynamically balanced with "half key" and without load (uncoupled).

The driving elements, such as pulleys, couplings, etc., must be balanced with "half key" before they are mounted on the shaft of the motors

**ATTENTION!**

- The air used for cooling the motor must be at ambient temperature, limited to the temperature indicated on the motor nameplate;
- Take the required measures in order to ensure the degree of protection indicated on the motor nameplate:
- Unused cable inlet holes in the terminal boxes must be properly closed with blanking plugs.
- The cable entries used must be fitted with components, such as, cable glands and conduits.
- Components supplied loose (for example, terminal boxes mounted separately) must be properly closed and sealed.
- Fixing elements mounted in the threaded through holes in the motor enclosure (for example, the flange) must be properly sealed.
- For flying leads motors, do not push the overlength of leads into the motor in order to prevent that they touch the rotor.

**Drain hole:** W30 Smart EC product can be supplied with drains. Figure 5.2 on page 5-2 and Figure 5.3 on page 5-2 give details about the mounting configuration.

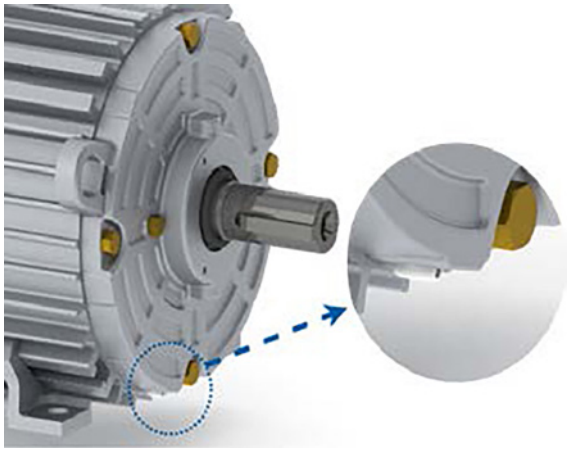

*Figure 5.2: Drain Position*

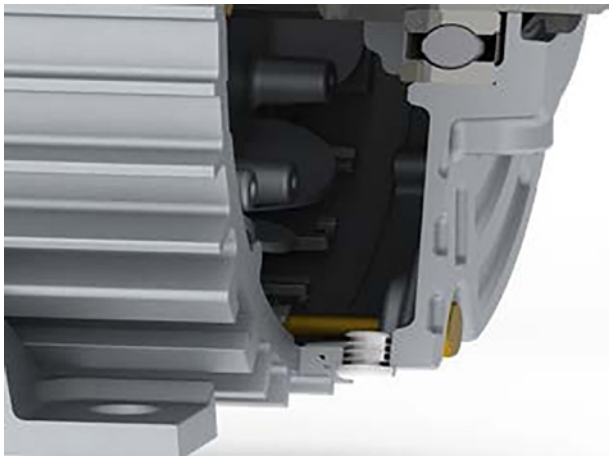

*Figure 5.3: Drain sectional view*

**ATTENTION!**

- The motor must always be positioned so the drain hole is at the lowest position.

**Slinger:** W30 Smart EC product in vertical shaft up mounting should be fitted with water slinger ring to prevent water ingress inside the motor. Consult WEG about this option.

**ATTENTION!**
Motors installed outdoors or in the vertical position require the use of additional shelter to protect them from water.

Inertia allowed:

*Table 5.2: Table of inertias allowed*

| Frame | Power (kW) | 900 rpm (kgm²) | 1200 rpm (kgm²) | 1500 rpm (kgm²) | 1800 rpm (kgm²) |
|---|---|---|---|---|---|
| IEC132 / NEMA 210 | 3.7 | 3.0 | 3.0 | 3.0 | 3.0 |
| | 4.0 | 3.0 | 3.0 | 3.0 | 3.0 |
| | 5.5 | 4.5 | 4.5 | 4.5 | 4.5 |
| | 7.5 | 6.0 | 6.0 | 6.0 | 6.0 |

## 5.1 POWER CONNECTIONS

**DANGER!**
Connect the motor properly to the power supply by means of safe and permanent contacts, always considering the data informed on the nameplate, such as rated voltage, wiring diagram, drive inputs, among others.

For power cables, switching and protection devices dimensioning, consider the rated motor current, the service factor, and the cable length, among others. For motors without terminal block, insulate the motor terminal cables by using insulating materials that are compatible with the insulation class informed on the nameplate. The minimum insulation distance between the non-insulated live parts themselves and between live parts and the grounding must meet the applicable standards and regulations for each country.

- Make the power connections following nameplate indication.

**Three-phase:**

- Power input: L1, L2 and L3 terminals.
- Protective earth: PE.
- If used, connect the optional external harmonic filter (passive PFC) in series to the line conductor.

WEG declares that the W30 Smart EC motor line is intended to be used as a part of an end-product and thus is not an independently used machine. All cables of this product need to be internally installed into the enclosure of the final product.

**DANGER!**
Always connect the equipment to the ground protection (PE).

**ATTENTION!**
The power supply that feeds the inverter shall have a solid grounded neutral.

## 5.2 CONTROL CONNECTIONS

The control connections are arranged in 3 different connectors (XC10, XC11 and XC14), according to the desired function:

**The product has:**

- 3 digital inputs.
- 1 transistor digital output.
- 1 relay digital output (NO / NC).
- 1 analog input (0-10 V / 4-20 mA).
- 1 10 V output for potentiometer source (50 mA max.).
- 1 RS-485 serial interface (Modbus RTU).

### 5.2.1 Terminal Blocks Naming and Switches

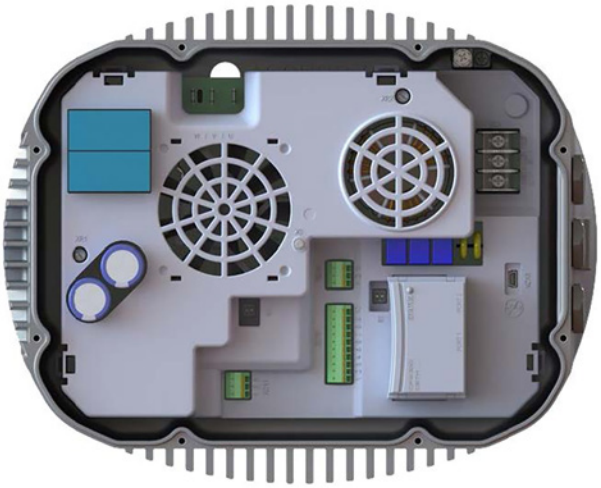

*Figure 5.4: Drive view*

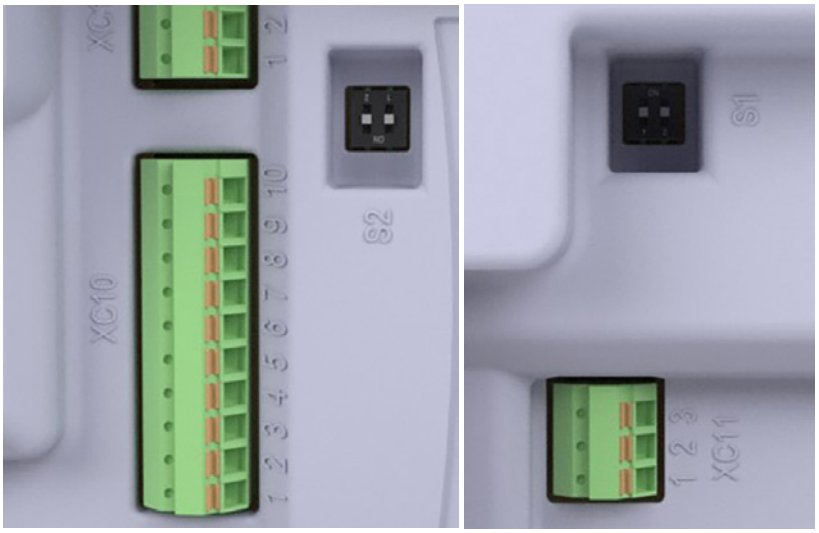


*Figure 5.5: Left: XC10 terminal block (Main input and outputs of the product)) and S2 keys (RS 485 resistors), Right: XC11 terminal block (Digital output 1, relay contacts) and S1 keys (forced serial communication)*

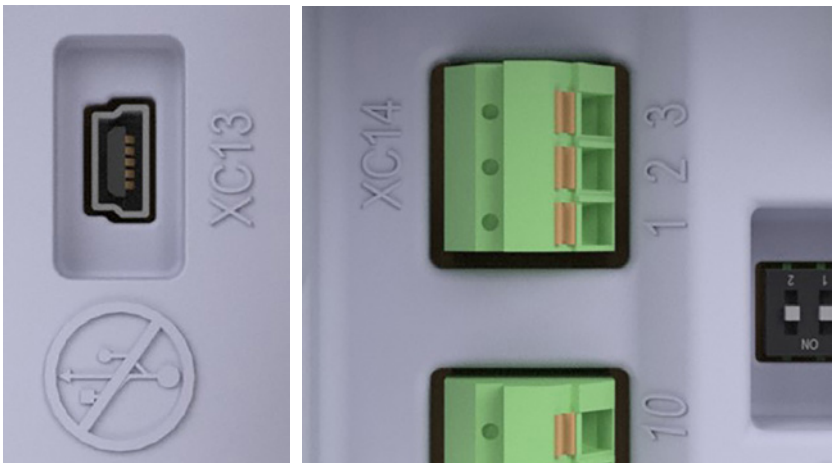


*Figure 5.6: Left: XC13 terminal block (HMI input), Right: XC14 terminal block (Modbus RTU input)*

**NOTE!**
Do not connect USB devices to this port, the device will be damaged, it is exclusively for HMI input.

*Figure 5.7: XC3 bluetooth or ethernet accessory connector*

### 5.2.1.1 XC10 Connector

This connector contains all digital and analog inputs, the 10 V source and transistor digital output, see table:

*Table 5.3: Applicable EMC Standards*

| Pin Number | Name | Description |
|---|---|---|
| 1 | GND | Reference 0 V |
| 2 | 10 V | DC Source +10 V |
| 3 | AI1 | Analogue Input by Current |
| 4 | GND | 0 V Reference |
| 5 | AI1 | Analogue Input by Voltage |
| 6 | DO2 | Transistor Output (Frequency) |
| 7 | GND | 0 V Reference |
| 8 | D13 | Digital Input (PWM) for Speed Reference |
| 9 | D12 | Digital input for direction of rotation |
| 10 | DI1 | Digital input for Turn/Stop |

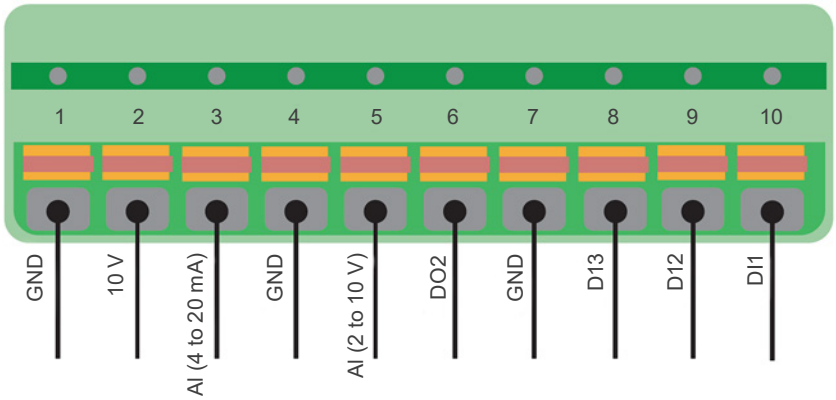


### 5.2.1.2 XC11 Connector

XC11 is the connector for relay digital output, see table below:

*Table 5.4: XC11 Connector*

| Pin Number | Name | Description |
|---|---|---|
| 1 | DO1 - RL - NC | Digital Output 1: Relay 1 Normally Closed Contact |
| 2 | DO1 - RL - C | Digital Output 1: Relay 1 Common Contact |
| 3 | DO1 - RL - NO | Digital Output 1: Relay 1 Normally Open Contact |

**XC11**

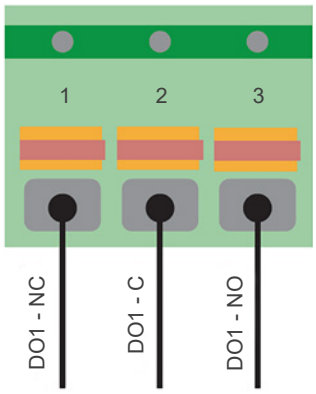


### 5.2.1.3 XC14 Connector

XC14 is the connector for Modbus RTU input, see table below:

*Table 5.5: XC14 Connector*

| Pin Number | Name | Description |
|---|---|---|
| 1 | GND | Reference |
| 2 | B (+) | RS485 - Terminal B |
| 3 | A (-) | RS485 - Terminal A |

**XC14**

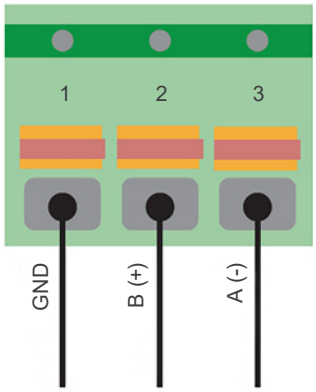

### 5.2.1.4 XC13 Connector

XC13 is the connection for external HMI (accessory). This connection should only be used for this purpose and it's not compatible with USB.

### 5.2.2 Quick Start

To use the product without altering the drive parameters, use XC10 connectors with the following instructions:

- To run the motor, connect pin 2 to pin 10.
- To invert rotational direction, connect pin 2 to pin 9.
- For maximum speed, connect Pin 2 in Pin 5.

**Note**: The standard acceleration ramp for 1500 rpm is 150s. To change this duration, the parameters of the drive must be adjusted, check Section 6.6 SERIAL COMMUNICATION on page 5-7.

**XC10**

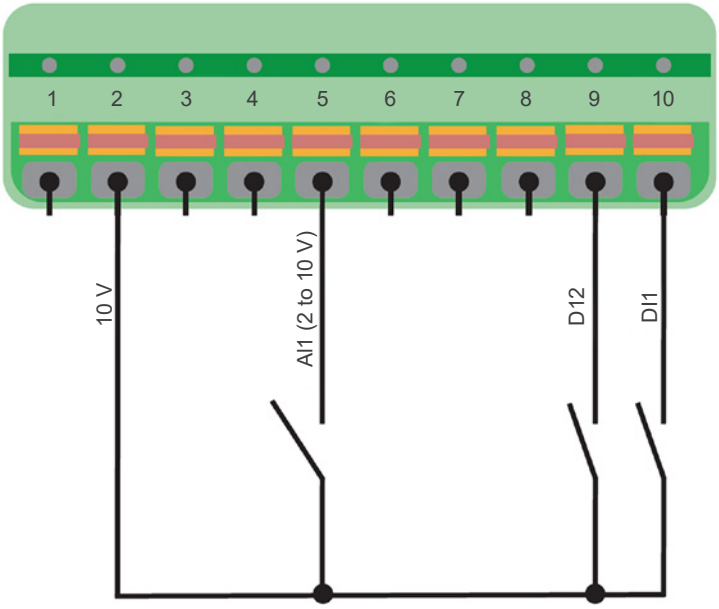


*Table 5.6: XC10 control connections*

| Pin Number | Name | Description |
|---|---|---|
| 2 | +10 V | +10 V DC source (100 mA max.) |
| 5 | AI_V | Voltage analog imput (0-10 V) |
| 9 | DI2 | Digital imput for rotation direction |
| 10 | DI1 | Digital imput for Run/Stop |

## 5.3 EMC REQUIREMENTS FOR CONFORMING INSTALLATIONS

- The standard Three-phase W30 Smart EC mounting solution (drive attached to the motor) comply with EN IEC 61800-3 / FCC requirements.
- For optional decentralized mounting, the product class may change and the product may require the use of external filters. Consult WEG for the solution that better comply with your installation requirements.
- W30 Smart EC product may require the use of an external filter to comply with harmonic current emissions requirements (EN61000-3-2). Consult WEG about optional external filters.

*Table 5.7: EMC Class*

| Power | Conducted | Radiated |
|---|---|---|
| 2.2 kW – 7.5 kW | C3 | C3 |

To meet the EMC levels in the Table 5.7 on page 5-8, it is necessary to strictly comply with the installation configuration requirements below mentioned:

- Grounding must be carried out on the drive cover in an isolated manner.
- Measurements must be carried out under load, providing the air velocity over the motor as specified in the design.

**ATTENTION!**
- Motors with internal filter are certified to C3 level.
- For operation with the drive decentralized (decoupled) the maximum cable length between motor and drive is 5 m.

**NOTE!**
The end user takes personal responsibility for the EMC compliance of the whole installation.

# 6 OPERATION INSTRUCTIONS

**DANGER!**
During operation, do not touch the non-insulated energized parts and never touch or stay too close to rotating parts.

The rated performance values and the operating conditions are specified on the motor nameplate. The voltage and frequency variations of the power supply should never exceed the limits established in the applicable standards.

Occasional different behavior during the normal operation (actuation of thermal protections, noise level, vibration level, temperature and current increase) must always be assessed by qualified personnel. In case of doubt, turn off the motor immediately and contact the nearest WEG service center.

## 6.1 RUN- STOP

Follow Item 5.2.1 Terminal Blocks Naming and Switches on page 6-1. Quick Start or via configure the parameters using Modbus RS485 / HMI.

- By default, digital input 1 (DI1) is set as run-stop.
- Use a switch between terminals 2 (+10 V) and 10 (DI1). The contact must be closed to run the motor and open to stop the motor.

## 6.2 SELECTING THE ROTATION DIRECTION

- Use a switch between terminals 2 (+10 V) and 10 (DI1). The contact must be closed to run the motor and open to stop the motor.
- Use a switch between terminals 2 (+10 V) and 9 (DI2) with a resistor. The switch must be ON for counter-clockwise (CCW) rotation and OFF for clockwise (CW) rotation. Rotation direction is defined as looking from the motor drive end (shaft).
- If the rotation direction is changed while the product is running, the motor will decelerate, reverse the direction and accelerate to the same speed that was running before.

## 6.3 HOW TO ADJUST SPEED

The product has three ways for the speed adjustment:

- PWM reference (digital input 3, by default).
- Current / Voltage analog input.
- Serial port (Modbus RTU).

**PWM and analog input speed adjust:**

- The speed can be adjusted by a PWM input signal in digital input 3 (pin 8 of XC10).
    - Frequency duty-cycle: 10 to 95 %.
    - Voltage: 10 to 24 Vpk [tolerance: -5 % / +10 %].
    - Frequency: 80 Hz [tolerance: ± 2.5].
- Or it can be adjusted by the analog input as.
    - DC voltage: 2 to 10 V DC [tolerance: ± 10 %] (pin 5 of XC10).
    - DC current: 4 to 20 mA DC [tolerance: ± 10 %] (pin 3 of XC10).

If the product status is "run" and the speed reference signal is below the minimum, the output frequency will stay at the minimum (P133), which is 20 Hz by default.

The following table show the reference for the input signals:

*Table 6.1: Control input reference*

| Signal Type | Condition | Resulting Speed Value |
|---|---|---|
| DC Voltage | Lower than 2 V DC | 20 Hz |
| | From 2 to 10 V DC | ((Max-Min)/8)×(IS-2) + Min |
| DC Current | Lower than 4 mA DC | 20 Hz |
| | From 4 to 20 mA DC | ((Max-Min)/16)×(IS-4) + Min |
| Frequency | Lower than 10 % | 20 Hz |
| | From 10 to 95 % | ((Max-Min)/85)×(IS-10) + Min |

**Notes:** The DC voltage signal can be applied by an external power supply or using the built-in 10 VDC source and an additional potentiometer (5 kΩ to 10 kΩ).

To convert the frequency and number of poles into RPM, use the following formula:

$$\text{RPM} = \frac{\text{120 x frequency}}{\text{number of poles}}$$

- **Max** = Maximum frequency adjusted in P134 (standard value -> motor nominal frequency).
- **Min** = Minimun frequency adjusted in P133 (standard value -> 20 Hz).
- **IS** = the value of the signal applied to the control connection in order to define the speed reference, for example, 5 V, 13 mA, etc.

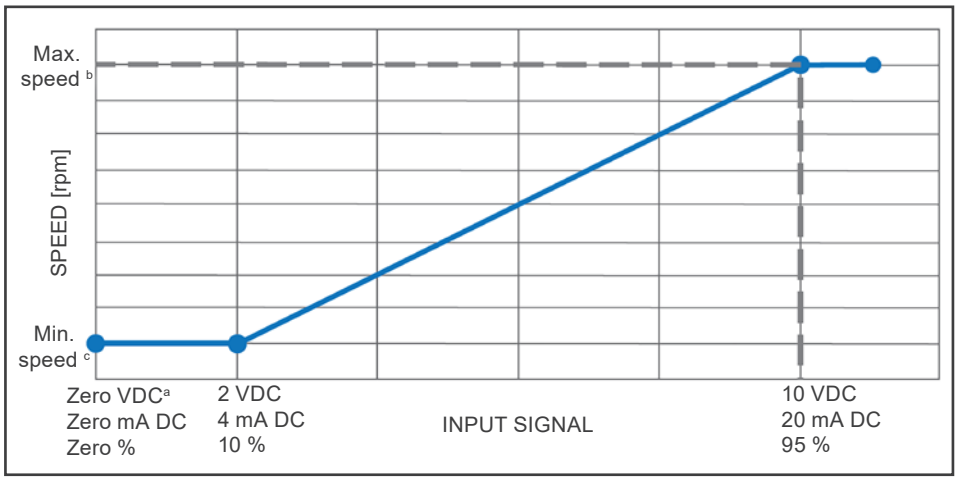


*Figure 6.1: Control input reference*

**ATTENTION!**
- The built-in power supplies have an output limit of 10 V source: 50 mA max.
- W30 Smart EC motors may be permanently damaged if subjected to signals outside of the specified range.
- Make sure that all unused conductors in control cable are insulated to avoid product malfunction or damage.

## 6.4 PRODUCT STANDARD FEATURES AND CONTROL REFERENCE

| Pin Number | Name | Description |
|---|---|---|
| 1 | GND | 0 V reference |
| 2 | +10 V | +10 V DC source (100 mA max.) |
| 3 | AI_I | Current analog input (4-20 mA) |
| 4 | GND | 0 V reference |
| 5 | AI_V | Voltage analog input (0-10 V) |
| 6 | DO_T | Transistor digital output |
| 7 | GND | 0 V reference |
| 8 | DI3 | Digital input (PWM) for speed reference |
| 9 | DI2 | Digital input for rotation direction |
| 10 | DI1 | Digital input for Run/Stop |

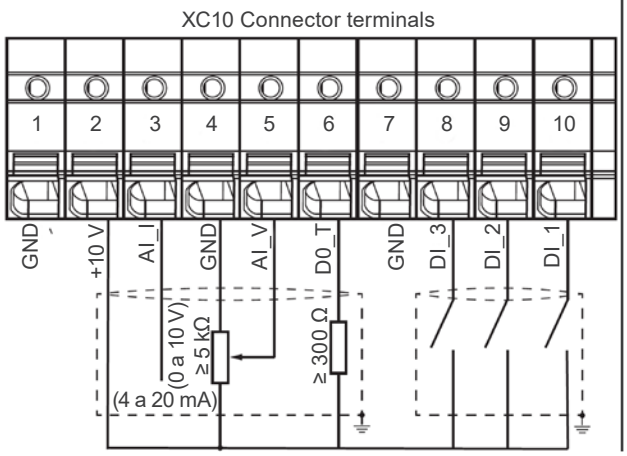


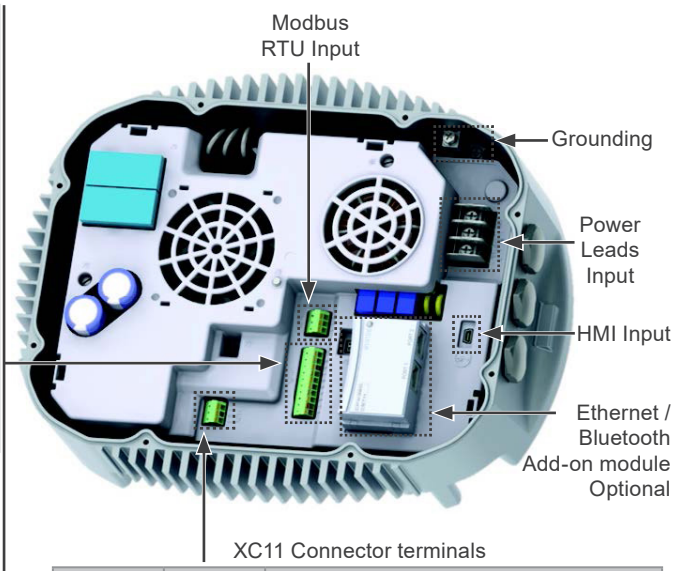


| Pin Number | Name | Description |
|---|---|---|
| 1 | D01:NC | Digital output, normally closed contact |
| 2 | D01:CO | Digital output, common contact |
| 3 | D01:NO | Digital output, normally open contact |

*Figure 6.2: Drive terminal blocks and ports*

The drive is compatible with some accessories available in the CFW320 range, in website **www.weg.net**.

## 6.5 FIRE MODE FUNCTION (OPTIONAL)

**DANGER!**
Notice that the W30 Smart EC is just one of the components of the ventilation system, and it is configurable for different functions, including the "Fire Mode" function.
Thus, the full operation of the "Fire Mode" function depends on the accuracy of the project and on the joint performance of the components of the system.
Ventilation systems that work on life safety applications must be approved by the Fire Department and/or another competent public authority, according to local regulations.
The uninterrupted operation of the W30 Smart EC, when configured for "Fire Mode", is critical and must be considered in the development of safety plans for the environments in which they are installed. Failure to do so may result in damage to the W30 Smart EC, other components of the ventilation system, the surrounding environment, and potentially pose a life-threatening risk to individuals.
The operation in the "Fire Mode" function may, under certain circumstances, result in fire, since the protection devices will be disabled.
Only personnel from engineering and safety must consider the configuration of the equipment for the "Fire Mode" function.
WEG strongly recommends following the precautions and procedures outlined above before using the W30 Smart EC in "Fire Mode". WEG will not be liable to the end user or third parties for any direct or indirect losses or damages resulting from the programming and operation of the W30 Smart EC in "Fire Mode", given the critical and specialized nature of this function.

**NOTE!**
W30 Smart EC are not "smoke extraction" motors (as defined in EN 12101-3) and may not under any circumstances be installed inside the high temperature airstream.

**NOTE!**
When the user activates the "Fire Mode" function, he/she acknowledges that the protection functions of the W30 Smart EC are disabled, which may result in damages to the W30 Smart EC itself, to the components connected to it, to the environment in which it is installed and to people present in such environment. Therefore, the user takes full responsibility for the risks arising from such operating condition. Operation with the "Fire Mode" function programmed voids the warranty of the product. The operation in this condition is internally registered by the W30 Smart EC and must be validated by a duly qualified professional of engineering and occupational safety, since such procedure significantly increases the operating risk.

The Fire Mode function is intended to make the frequency inverter continue to drive the motor even under adverse conditions, inhibiting most faults generated by the frequency inverter. The Fire Mode is activated by driving the digital input (DI3) with logic level "1" (it could be triggered using the internal 10 V DC power supply) at the input terminals for at least 5 seconds. Besides, it is necessary that parameter P580 be configured in one of its options different from 0 or 3. If this is not done, the inverter will indicate that it is in configuration status through parameter P006 with the value 5 and parameter P047 with the value 29.

Once the inverter is in the Fire Mode state, the only way to disable the Fire Mode operation function is to turn off the entire solution and then turn it back on again. When the inverter detects the entry into fire mode, it updates the operating mode status in "P006 - Inverter Status" to "8 - Fire Mode", and the alarm "A211" is displayed on the HMI and written at the parameter "P048 - Current Alarm", indicating that the frequency inverter is in Fire Mode.

## 6.6 SERIAL COMMUNICATION

For more information about parametrization, please access quick reference of Parameters, alarms and Faults of Frequency Inverter W30 SMART EC in **www.weg.net**.

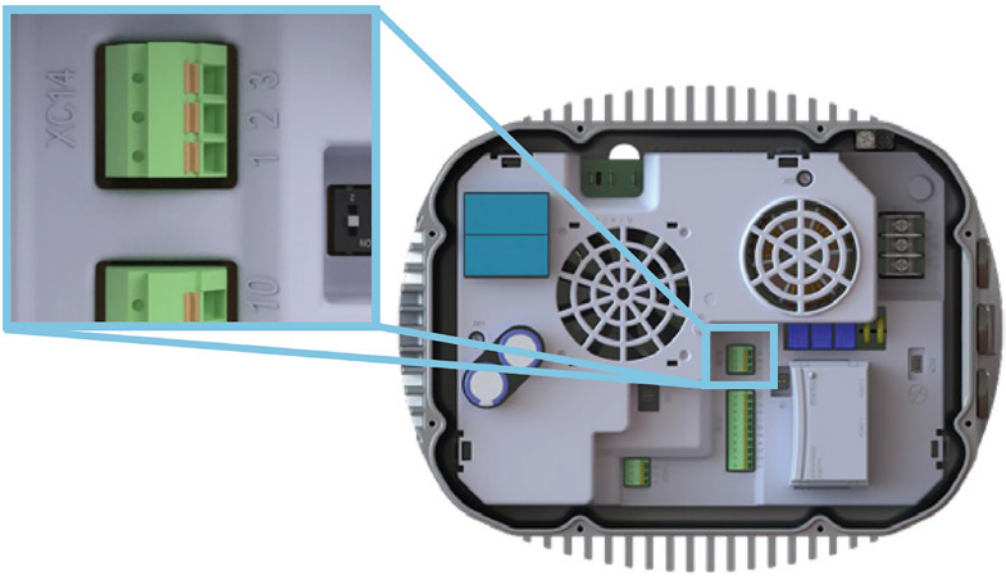


*Figure 6.3: XC14 Terminal Block*

*Table 6.2: Connections of the XC14 Terminal Block*

| Number Pin | Name | Description |
|---|---|---|
| 1 | GND | Reference 0 V |
| 2 | B (+) | RS485 - Terminals B |
| 3 | A (-) | RS485 - Terminals A |

*Table 6.3: Configuration of S1 keys for forced serial communication*

| Key Adjustment | Option |
|---|---|
| S1.1 = OFF and S1.2 = OFF | Serial communication respects the parameter settings: P308, P310, P311 and P312 |
| S1.1 = ON and S1.2 = OFF | Force the serial standard parameterization (described below) |
| S1.1 = OFF and S1.2 = ON | Combination not allowed |
| S1.1 = ON and S1.2 = ON | Combination not allowed |

The forced serial configuration has the following characteristics:

- **Address**: 1.
- **Communication Rate**: 19200 bits/s.
- **Byte Configuration**: 8 bits, even parity, and 1 stop bit.
- **Protocol**: Modbus RTU Slave.

**NOTE!**
The forced serial configuration is the standard configuration for HMI communication. It is normally used if, by some configuration mistake, the operator lost the communication with HMI and needs to correct the values of the parameters.

*Table 6.4: Configuration of the S2 keys for RS485 configuration*

| Key Adjustment | Option |
|---|---|
| S2.1 = OFF and S2.2 = OFF | RS485 Termination Off |
| S2.1 = ON and S2.2 = ON | RS485 Termination On |
| S2.1 = OFF and S2.2 = ON | Combination not allowed |
| S2.1 = ON and S2.2 = OFF | Combination not allowed |

To connect this inverter to an RS485 network, the following points should be observed:

- It is recommended to use a shielded twisted pair cable.
- It is also recommended that the cable has an additional wire for connecting the reference signal (GND). If the cable does not have the additional wire, the GND signal must be left disconnected.
- The cable routing should be done separately (and if possible, away) from the power supply cables.
- All devices on the network must be properly grounded, preferably to the same ground connection. The cable shielding should also be grounded.
- Enable the termination resistors only at two points, at the ends of the main bus, even if there are branches from the bus.

## 6.6.1 Interfaces to Access Parameters

### 6.6.1.1 Computer

Connect the INTERFACE CONVERTER USB-RS485 (Material 14389292) to the XC14 connector, use the WPS – WEG PROGRAMMING SUITE to visualize and set the parameters. More information in the WPS manual.

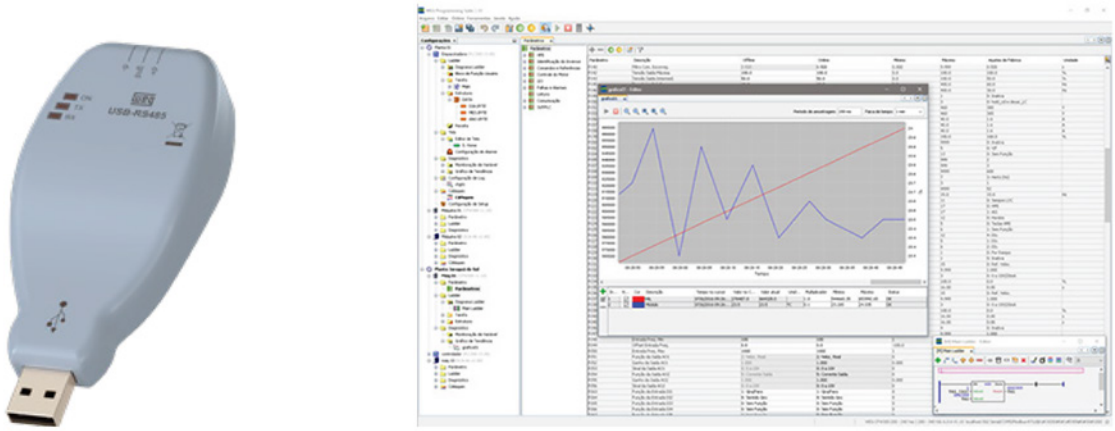

*Figure 6.4: INTERFACE CONVERTER USB-RS485 to the XC14 connector*

### 6.6.1.2 Human Machine Interface (HMI)

Connect the HMI (Material 50143194) to the XC13 connector.

**Note:** Do not connect any other device to the XC13 connector, it may damage the device. Do not use the HMI simultaneously with other devices connected to the XC14 connector.

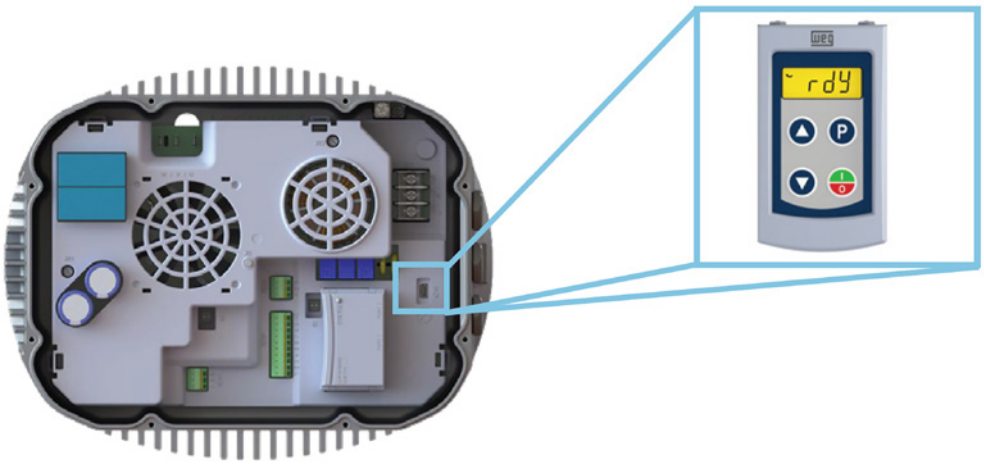


*Figure 6.5: HMI to the XC13 connector*

### 6.6.1.3 Bluetooth

Connect a Bluetooth module (Material 16047097) to the XC3 connector and use the WPS app downloaded through the appstores (Android/IOS) to connect.

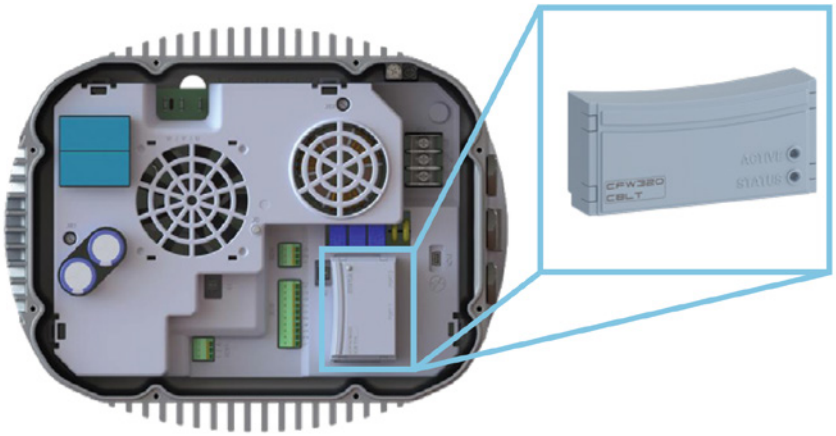


*Figure 6.6: Connect a Bluetooth module to the XC3 connector*

# 7 PRODUCT PROTECTION AND FAULT DIAGNOSIS

## 7.1 SAFETY FUNCTIONS

The drive system has the following electronic protections:

- Input overvoltage protection (F022).
- Input under voltage protection (F021).
- Overload / Locked rotor protection (F072).
- Drive over temperature protection (F051 and F078).
- Output overcurrent / short-circuit protection (F070).

W30 Smart EC has a LED in the middle of its frame cover, which indicates the fault status and helping in the fault diagnosis:

- The LED will stay ON while the motor is running (speed higher than zero).
- The LED will stay OFF while the motor is stopped (speed equals to zero).

The LED will blink in case of any fault. The below table indicates the blinking behavior according to the fault type:

*Table 7.1: The blinking behavior according to the fault type*

| Blinking Periods | Fault | ON Time (s) | OFF Time (s) | Wait / Interval Time (Off) (s) |
|---|---|---|---|---|
| 1 | Under voltage - F021 | 0.1 | 0.1 | - |
| 3 | Over current / Short-circuit - F070 | 0.25 | 0.25 | 2 |
| 6 | Overvoltage - F022 | | | |
| 9 | Self-diagnosis fault - F084 | | | |
| 10 | CPU / Watchdog timeout - F080 | | | |
| 11 | Overload / Locked rotor - F072 | | | |
| 1 | Other faults / CONF (P047≠0) | 0.25 | 3 | - |

For more information check https://static.weg.net/medias/downloadcenter/h87/hcb/WEG-WMO-W30-smart-ec-132s-18039204-quick-guide-spanish-web.pdf.

## 7.2 INFORMATION FOR CONTACTING TECHNICAL SUPPORT

For technical support and servicing, it is important to have the following information in hands:

Motor model, Batch number, and manufacturing date available in the motor nameplate (refer to Chapter 4 IDENTIFICATION LABELS on page 7-1).

- Installed software version available in the drive label (refer to Chapter 4 IDENTIFICATION LABELS on page 7-1).

# 8 MAINTENANCE

**DANGER!**

- Before performing any service, ensure that the motor is at a complete standstill, disconnected from the power supply, and protected against accidental re-energization.
- For motors with permanent magnet rotor (W30 Smart EC), the motor assembly and disassembly require the use of proper devices due to the attracting or repelling forces that occur between metallic parts. This work must only be performed by a WEG Authorized service center specifically trained for such an operation. People with pacemakers cannot handle these motors. The permanent magnets can also cause disturbances or damages to other electric equipment and components during maintenance.

**ATTENTION!**

- Motor disassembly during the warranty period must be performed by a WEG authorized service center only.
- Regularly inspect the operation of the motor, according to its application, and ensure a free air flow. Inspect the seals, the fastening bolts, the bearings, the vibration and noise levels, the drain operation, etc. The lubrication interval is specified on the motor nameplate.

# 9 ENVIRONMENTAL INFORMATION

For information regarding disposal at end of life cycle refer to the manual "**Disposal and Environmental Information**" available in the website **www.weg.net** or contact WEG.

# 10 ADDITIONAL INFORMATION

For further information about shipment, storage, handling, installation, operation and maintenance of electric motors, access the website **www.weg.net**.

For special applications and operating conditions refer to the manual 50033244 available in the website or contact WEG.

When contacting WEG, please, have the full description of the motor at hand, as well as the Motor model, Batch Number and manufacturing date, indicated on the motor nameplate.

## 10.1 WARRANTY TERM

WEG Equipamentos Elétricos S/A, Motors Unit ("WEG"), offers warranty against defects in workmanship and materials for its products for a period of 18 months from the invoice date issued by the factory or distributor/ dealer, limited to 24 months from the date of manufacture.The paragraphs above contain the legal warranty periods.If a warranty period is defined in a different way in the commercial/technical proposal of a particular sale, that will supersede the time limits set out above.

The warranty periods above are independent of the product installation date and the startup.

If any defect or abnormal occurrence is detected during machine operation, the customer must immediately notify WEG in writing about the occurred defect and make the product available for WEG or its Authorized Service Center for the period required to identify the cause of the defect, check the warranty coverage, and perform the proper repairs.

In order for the warranty to be valid, the customer must be sure to follow the requirements of WEG's technical documents, especially those set out in the product Installation, Operation and Maintenance Manual, as well as the applicable standards and regulations in force in each country.

Defects arising from the inappropriate or negligent use, operation, and/or installation of the equipment, non-execution of regular preventive maintenance, as well as defects resulting from external factors or equipment and components not supplied by WEG, will not be covered by the warranty.The warranty will not apply if the customer at its own discretion makes repairs and/or modifications to the equipment without prior written consent from WEG.

The warranty will not cover equipment, components, parts and materials whose lifetime is usually shorter than the warranty period. It will not cover defects and/or problems resulting from force majeure or other causes not imputable to WEG, such **www.weg.net** W30 Smart EC | 15 as, but not limited to: incorrect or incomplete specifications or data supplied by the customer; transportation, storage, handling, installation, operation and maintenance not complying with the provided instructions; accidents; defects in the construction works; use in applications and/or environments for which the machine was not designed; equipment and/or components not included in the scope of WEG supply. The warranty does not include disassembly services at the buyer's premises, product transportation costs and travel, lodging and meal expenses for the technical staff of the Service Centers, when requested by the customer. The services under warranty will be provided exclusively at WEG authorized Service Centers or at one of its manufacturing plants. Under no circumstances will the warranty services extend the equipment warranty period. WEG's Civil Liability is limited to the supplied product; WEG will not be liable for indirect or consequential damages, such as losses of profit and revenue losses and alike which may arise from the contract signed between the parties.

# 11 TECHNICAL SPECIFICATIONS

## 11.1 POWER SUPPLY

- Rated voltage: according product nameplate.
- Voltage tolerance: -10 % to +10 %.
- Frequency: 50 / 60 Hz (48 Hz to 62 Hz).
- Phase imbalance: ≤ 3 % of the rated phase-to-phase input voltage.
- Minimum interval between consecutive starts: 5 minutes.
- Maximum 1 connection from power supply cycle per 5 minutes.

## 11.2 VENTILATION SYSTEM

The W30 Smart EC line was designed to operate with IC418 cooling method - TEAO (Totally Enclosed Air Over) with minimum air velocity of 6m/s.

For operation as IC410 - TENV (Totally Enclosed Non-Ventilated) or TEAO with lower air velocity, consult WEG.

## 11.3 STANDARDS AND DIRECTIVES

- EN 60034 - 1: 2010: Rotating electrical machines - Part 1: Rating and performance.
- EN 60034 - 2 - 1: 2014: Rotating electrical machines - Part 2 - 1: Standard methods for determining losses and efficiency from tests (excluding machines for traction vehicles).
- EN 60034 - 5: 2020: Rotating electrical machines - Part 5: Degrees of protection provided by the integral design of rotating electrical machines (IP code) - Classification.
- EN 60034 - 6: 1993: Rotating electrical machines - Part 6: Methods of cooling (IC code).
- EN 60034 - 7: 2020: Rotating electrical machines - Part 7: Classification of types of constructions, mounting arrangements and terminal box position (IM code).
- EN 60034 - 8: 2007 / A1: 2014: Rotating electrical machines - Part 8: Terminal markings and direction of rotation.
- EN 60034 - 9: 2005 / A1: 2007: Rotating electrical machines - Part 9: Noise limits.
- EN 60034 - 14: 2018: Rotating electrical machines - Part 14: Mechanical vibration of certain machines with shaft heights 56 mm and higher - measurement, evaluation and limits of vibration.
- CLC/TS 60034 - 25: 2008: Rotating electrical machines - Part 25: Guidance for the design and performance of a.c. motors specifically designed for converter supply.
- CLC IEC/TS 60034 - 30 - 2: 2021: Rotating electrical machines - Part 30 - 2: Efficiency classes of variable speed AC motors (IE-code).
- EN IEC 63000: 2018: Technical documentation for the assessment of electrical and electronic products with respect to the restriction of hazardous substances (IEC 63000:2016).
- EN IEC 61800 - 3: 2018: Adjustable speed electrical power drive systems - Part 3: EMC requirements and specific test methods.
- EN 60204-1: 2018: Safety of machinery - electrical equipment of machines - Part 1: General requirements.
- IEC 61800-5-1: 2007 / A1: 2017 / A1: 2021: Adjustable speed electrical power drive systems - Part 5 - 1: Safety requirements - Electrical, thermal and energy.

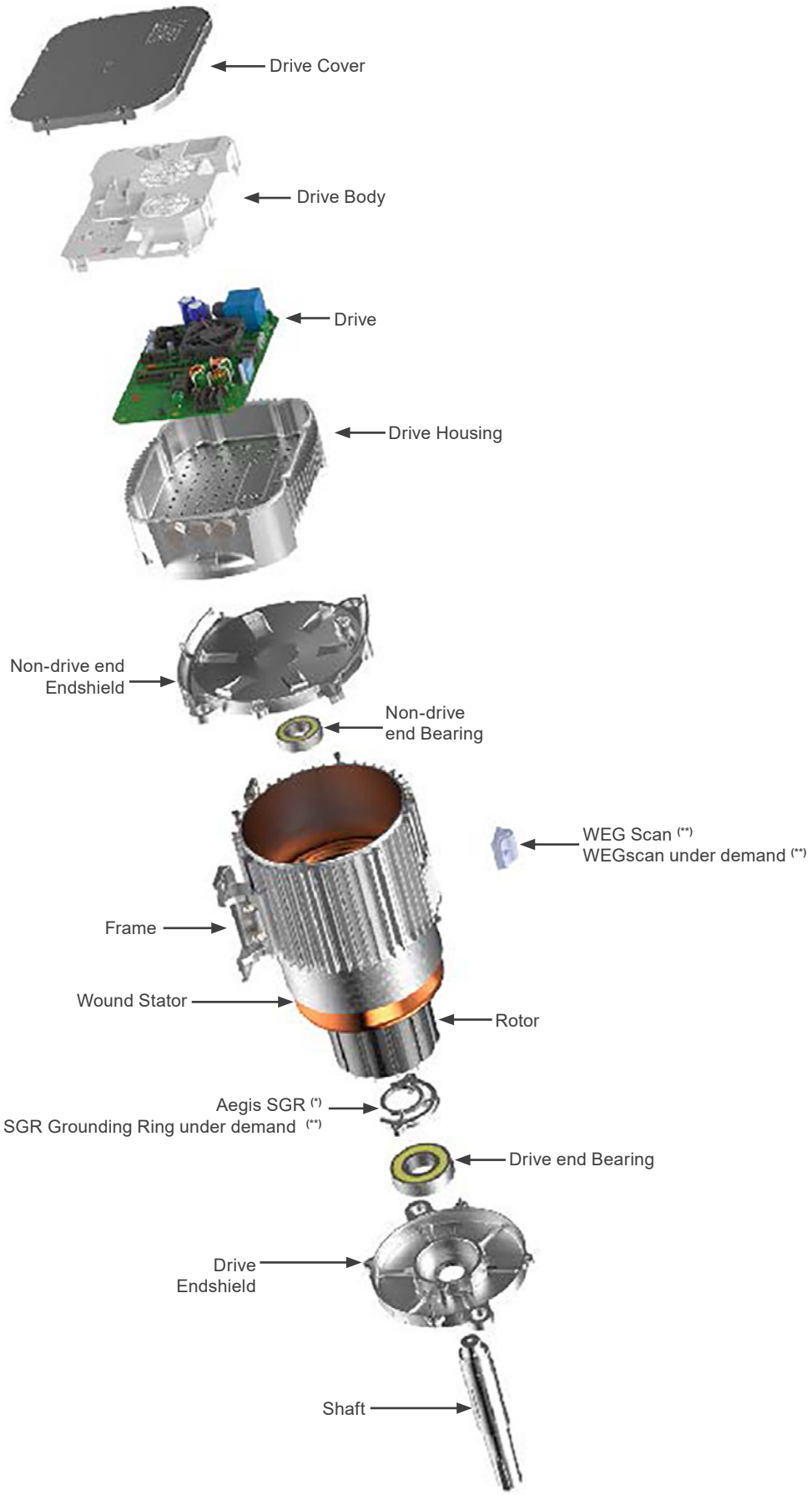
Drive Cover
Drive Body
Drive
Drive Housing
Non-drive end
Endshield
Non-drive
end Bearing
WEG Scan (**)
WEGscan under demand (**)
Frame
Wound Stator
Rotor
Aegis SGR (*)
SGR Grounding Ring under demand (**)
Drive end Bearing
Drive
Endshield
Shaft

**BRAZIL**
**WEG MOTORES LTDA**
Av. Prefeito Waldemar Grubba, 3000
89256-900 - Jaraguá do Sul - SC
Phone: 55 (47) 3276-4000
E-mail: motores@weg.net
**www.weg.net/br**