Hydrogenerators

GH10 Line
Brushless - Horizontal

Installation, Operation and Maintenance Manual

Installation, Operation and Maintenance Manual

Document Number: 13366525

Model: GH10

Language: English

Revision: 02

March 2022

Dear Customer,

Thank you for purchasing a WEG generator. Our products are developed with the highest standards of quality and efficiency which ensures outstanding performance.
Electricity plays a major role in the comfort and well-being of mankind. Since the generator is responsible for generating this energy, it must be identified and treated as an electrical machine, whose features require certain precautions, such as for storage, installation and maintenance.
All efforts have been made to ensure that the information contained in this manual is faithful to the configurations and operation of the generator.
Therefore, we recommend that you read this manual carefully before proceeding with the installation, operation or maintenance of the generator in order to ensure safe and reliable operation of your equipment and facility. If you need any further information, please contact WEG.
Always keep this manual close to the generator, so it can be consulted whenever necessary.

ATTENTION

1. It is imperative to follow the procedures contained in this manual for the warranty to be valid;
2. The generator installation, operation and maintenance procedures must be performed only by qualified personnel.

NOTES

1. The total or partial reproduction of information supplied in this manual is authorized, provided that reference is made to its source.
2. If this manual is lost, an electronic PDF file is available at www.weg.net or another printed copy may be requested.

WEG EQUIPAMENTOS ELÉTRICOS S.A.

ÍNDICE

1 INTRODUCTION 11
1.1 SAFETY WARNINGS IN THE MANUAL 11

2 GENERAL INSTRUCTIONS 12
2.1 QUALIFIED PERSONNEL 12
2.2 SAFETY INSTRUCTIONS 12
2.3 STANDARDS 12
2.4 ENVIRONMENTAL CONDITIONS 12
2.5 OPERATING CONDITIONS 13
2.6 VOLTAGE AND FREQUENCY 13

3 RECEIVING, HANDLING AND STORAGE 14
3.1 RECEIVING 14
3.2 HANDLING 14
3.3 STORAGE 15
3.3.1 Outdoor storage 15
3.3.2 Extended storage 15
3.3.2.1 Storage location 15
3.3.2.1.1 Indoor storage 15
3.3.2.1.2 Outdoor storage 15
3.3.2.2 Separate parts 16
3.3.2.3 Space heater 16
3.3.2.4 Insulation resistance 16
3.3.2.5 Exposed machined surfaces 16
3.3.2.6 Bearings 16
3.3.2.6.1 Grease-lubricated rolling bearing 16
3.3.2.6.2 Oil-lubricated rolling bearing 16
3.3.2.6.3 Sleeve bearing 16
3.3.2.7 Terminal box 17
3.3.2.8 Inspections and records during storage 17
3.3.2.9 Maintenance plan during storage 18
3.3.3 Preparation for commissioning 19
3.3.3.1 Cleaning 19
3.3.3.2 Bearing inspection 19
3.3.3.3 Bearing lubrication 19
3.3.3.4 Insulation resistance verification 19
3.3.3.5 Others 19

4 INSTALLATION 20
4.1 INSTALLATION SITE 20
4.2 SHAFT LOCK 20
4.3 ROTATION DIRECTION 20
4.4 INSULATION RESISTANCE 20
4.4.1 Safety instructions 20
4.4.2 General considerations 20
4.4.3 Measurement on the stator windings 20
4.4.4 Measurement on the rotor and exciter windings 21
4.4.5 Additional Information 21
4.4.6 Polarization index 21
4.4.7 Conversion of the measured values 21
4.4.8 Polarization Index (P.I.) 22
4.4.9 Recommended Minimum Values 22
4.5 PROTECTIONS 22
4.5.1 Thermal protections 22
4.5.1.1 Temperature sensors 22
4.5.1.2 Temperature limits for the windings 22
4.5.1.3 Alarm and trip temperatures 23
4.5.1.4 Temperature and ohmic resistance of the PT100 thermoresistance 24
4.5.2 Protections in the panel 24
4.5.3 Space heater 24
4.6 COOLING 24
4.7 ELECTRICAL ASPECTS 25

4.7.1 Electrical connections ... 25
4.7.1.1 Main electrical connections ... 25
4.7.1.2 Grounding ... 25
4.8 MECHANICAL ASPECTS ... 25
4.8.1 Foundations ... 25
4.8.2 Foundation loads ... 25
4.8.3 Base types ... 25
4.8.3.1 Concrete base ... 25
4.8.3.2 Metal base ... 25
4.8.4 Natural frequency of the base ... 26
4.8.5 Mounting ... 26
4.8.6 Anchor plate set ... 26
4.8.7 Leveling ... 26
4.8.7.1 Support ... 26
4.8.8 Alignment ... 26
4.8.9 Couplings ... 27
4.8.9.1 Direct coupling ... 28
4.8.9.2 Gear coupling ... 28
4.8.9.3 Coupling of generators equipped with sleeve bearings ... 28
4.9 BRAKE ... 29
4.10 HYDRAULIC UNIT ... 29

5 OPERATION PRINCIPLE ... 30
5.1 EXCITATION ... 31
5.2 DE-EXCITATION ... 31
5.3 VOLTAGE REGULATOR ... 31

6 COMMISSIONING ... 32
6.1 PRELIMINARY INSPECTION ... 32
6.2 FIRST OPERATION WITHOUT LOAD ... 32
6.3 OPERATION ... 33
6.3.1 Connection to the load or electric power system (Grid) ... 33
6.3.2 Synchronization of the generator with the power grid ... 33
6.3.3 Data recording ... 33
6.3.4 Temperatures ... 33
6.3.5 Bearings ... 34
6.3.6 Vibration ... 34
6.3.7 Vibration causes ... 34
6.4 SHUTDOWN ... 34

7 MAINTENANCE ... 35
7.1 GENERAL ... 35
7.2 GENERAL CLEANING ... 35
7.3 WINDING INSPECTIONS ... 35
7.4 WINDING CLEANING ... 35
7.4.1 Inspections ... 35
7.4.2 Re-impregnation ... 35
7.4.3 Insulation resistance ... 35
7.5 COOLING SYSTEM MAINTENANCE ... 36
7.6 VIBRATION ... 36
7.7 SHAFT GROUNDING DEVICE ... 36
7.8 EXCITER MAINTENANCE ... 36
7.8.1 Exciter ... 36
7.8.2 Insulation resistance ... 36
7.8.3 Diode test ... 36
7.8.3.1 Diode Replacement ... 36
7.8.4 Varistor test ... 37
7.8.4.1 Varistor replacement ... 37
7.9 BEARING MAINTENANCE ... 37
7.9.1 Grease-lubricated rolling bearings ... 37
7.9.1.1 Lubrication instructions ... 37
7.9.1.2 Procedures for rolling bearing relubrication ... 38
7.9.1.3 Rolling bearing relubrication with drawer device for grease removal ... 38
7.9.1.4 Type and amount of grease ... 38
7.9.1.5 Grease compatibility ... 38
7.9.1.6 Bearing disassembly ... 38

7.9.1.7 Bearing assembly 39
7.9.2 Oil-lubricated rolling bearing 39
7.9.2.1 Lubrication instructions 39
7.9.2.2 Oil type 40
7.9.2.3 Oil change 40
7.9.2.4 Bearing operation 40
7.9.2.5 Bearing disassembly 40
7.9.2.6 Bearing assembly 41
7.9.3 Sleeve bearings 41
7.9.3.1 Bearing data 41
7.9.3.2 Bearing installation and operation 41
7.9.3.3 Cooling by water circulation 41
7.9.3.4 Oil change 41
7.9.3.5 Sealings 41
7.9.3.6 Sleeve bearing operation 42
7.9.3.7 Sleeve bearing maintenance 42
7.9.4 Protection setting 42
7.9.5 Disassembly/assembly of the bearing temperature sensors 42

8 GENERATOR DISASSEMBLY AND ASSEMBLY 43
8.1 DISASSEMBLY 43
8.2 ASSEMBLY 43
8.3 TIGHTENING TORQUE 43
8.4 AIR GAP MEASURMENT 44
8.5 SPARE PARTS 44

9 MAINTENANCE PLAN 45

10 ABNORMALITIES, CAUSES AND SOLUTIONS 46

11 DECLARATION OF CONFORMITY 48

12 ENVIRONMENTAL INFORMATION 49
12.1 PACKAGE 49
12.2 PRODUCT 49
12.3 HAZARDOUS WASTE 49

13 SERVICE NETWORK 49

14 WARRANTY TERM 50

1 INTRODUCTION

This manual contains information regarding low and high voltage synchronous generators.
Generators are supplied with specific documents (drawings, connection diagram, characteristic curves, etc.). Those documents, together with this manual, must be thoroughly evaluated before proceeding with the installation, operation or maintenance of the generator.
All the procedures and standards contained in this manual must be observed in order to ensure proper operation of the generator and the safety of the personnel involved. Following these procedures is also important to ensure the validity of the generator warranty. Thus, we recommend carefully reading this manual before performing the installation, operation or maintenance of the generator. If you need any further information, consult WEG.

1.1 SAFETY WARNINGS IN THE MANUAL

In this manual, the following safety warnings are used:

DANGER

Failure to observe the procedures recommend in this warning may result in death, serious injuries and extensive equipment damage.

ATTENTION

Failure to observe the procedures recommend in this warning may result in equipment damage.

NOTE

This provides important information for correct understanding and proper operation of the product.

2 GENERAL INSTRUCTIONS

All personnel involved with the assembly, operation or maintenance of electrical installations must be informed and updated on the standards and safety instructions that guide the job and are advised to strictly comply with them. Before beginning any job, the person in charge must make sure that all points have been duly observed and warn the respective personnel about the danger inherent to the task to be performed.
Improper application, inadequate handled or maintenance of the generator, may cause serious injuries and/or material damages.
Therefore, it is highly recommended that such jobs be always performed by qualified personnel.

2.1 QUALIFIED PERSONNEL

The term qualified personnel means those who, because of their training, experience, education level and knowledge of the applicable standards, specifications, accident prevention, safety standards and operating conditions, have been authorized by the persons in charge to execute the necessary tasks, and who are able to recognize and avoid any possible danger.
Such qualified personnel must also know and be able to provide first aid procedures if necessary.
The entire start-up, maintenance and repair tasks must only be performed by qualified personnel.

2.2 SAFETY INSTRUCTIONS

DANGER

During normal operation of this equipment, a hazard associated with energized or rotating components with high voltage or elevated temperatures exists.
Thus, the operation with open terminal boxes, unprotected couplings, improper handling, or failure to comply with the operating standards, may cause severe personal injuries and material damages.

ATTENTION

When devices and equipment are used outside the industrial environment, the user must ensure the safety of the equipment by adopting proper protection and safety measures during installation (for example, keeping people away, avoiding contact of children, etc.).

Those responsible for the safety of the installation must ensure that:
- Only qualified personnel install and operate the equipment;
- They have this manual and all other documents supplied with the generator at hand, as well as that they perform the tasks in strict compliance with the service instructions, relevant standards and specific product documentation.

ATTENTION

Failure to comply with installation and safety standards may void the product warranty. Firefighting equipment and first aid notices must be available in visible and easily accessible locations at the work site.

Qualified personnel must also observe:
- All the technical data regarding the allowed applications (operating conditions, connections and installation environment), provided in the purchase order documents, operating instructions, manuals and other documentation;
- The specific regulations and conditions for the local installation;
- The use of suitable tools and equipment for handling and transportation;
- That the protective devices of the individual components are removed shortly before installation.

Individual parts must be stored in vibration-free environments, avoiding falls and ensuring their protection against aggressive agents and/or that they do not jeopardize people.

2.3 STANDARDS

Generators are specified, designed, manufactured and tested according to the standards described in Table 2.1. The applicable standards are specified in the commercial contract, which may indicate other national or international standards, depending on the application or installation location.

Table 2.1: Applicable standards

	STANDARDS
Specification	IEC60034-1 / NBR5117 IEC60034-3
Dimensions	IEC60072 / NBR5432
Tests	IEC60034-4 / NBR5052
Degrees of protection	IEC60034-5 / NBR IEC 60034-5
Cooling	IEC60034-6 / NBR IEC 60034-6
Mounting	IEC60034-7 / NBR IEC 60034-7
Noise	IEC60034-9 / NBR IEC 60034-9
Mechanical vibration	IEC60034-14 / NBR IEC 60034-14
Mechanical tolerances	ISO286 / NBR6158
Balancing	ISO1940 / NBR8008

2.4 ENVIRONMENTAL CONDITIONS

The generator was designed according to the specific environment characteristics (temperature and altitude) of your application, and are described on the nameplate and in the datasheet of the generator.

ATTENTION

For the use of water-cooled generators in ambient temperatures below +5 °C, antifreeze additives must be added to the water.

2.5 OPERATING CONDITIONS

In order for the product warranty to be valid, the generator must operate according to the rated data indicated on its nameplate, observing the applicable standards and the information provided in this manual.

2.6 VOLTAGE AND FREQUENCY

The generator must be able to perform its main function continuously in Zone A, but it does not have to fully meet its performance characteristics at rated voltage and frequency (refer to the point with rated characteristics in Figure 2.1), and it may present some deviations. The temperature rises may be above those at rated voltage and frequency.
The generator must be able to perform its main function in Zone B, but it may present greater deviations of its performance at rated voltage and frequency than in Zone A. The temperature rises may be higher than those observed at rated voltage and frequency and, most likely, will be higher than those in Zone A.
Prolonged operation in the periphery of Zone B is not recommended.

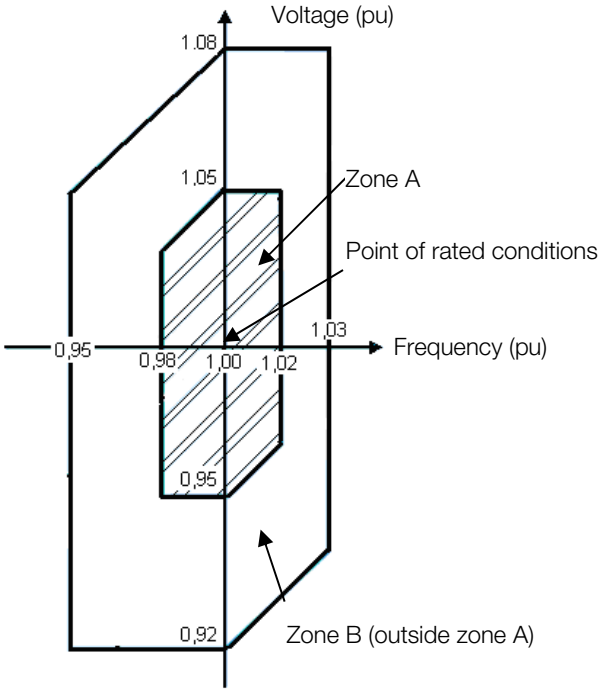

Figure 2.1: Voltage and frequency variation limits (IEC60034-1)

3 RECEIVING, HANDLING AND STORAGE

3.1 RECEIVING

All generators were tested and are in perfect operating conditions. The machined surfaces are protected against corrosion. The package must be inspected upon receipt for occasional damages during transportation.

ATTENTION

Any damage must be photographed, documented and reported immediately to the carrier, the insurer and WEG. The non-communication of this damage will void the warranty.

ATTENTION

Parts supplied in additional packages must be checked upon receipt.

- When lifting the package (or container), the proper hoisting points, the weight indicated on the package or on the nameplate, and the operating capacity of the hoisting equipment must be observed.
- Generators packed in wooden crates must always be lifted by their own hoisting eye or by a proper forklift; they must never be lifted by the package;
- The package can never be overturned. Place it on the floor carefully (without impact) in order to avoid damage to the bearings;
- Do not remove the grease for protection against corrosion from the shaft end and, or the closing plugs present in the terminal box holes. These protections must remain in place until the moment of the final assembly.
- A complete visual inspection of the generator must be carried out after removing the package;
- The shaft locking system must be removed just before the installation and stored to be used in future transportation of the generator.

3.2 HANDLING

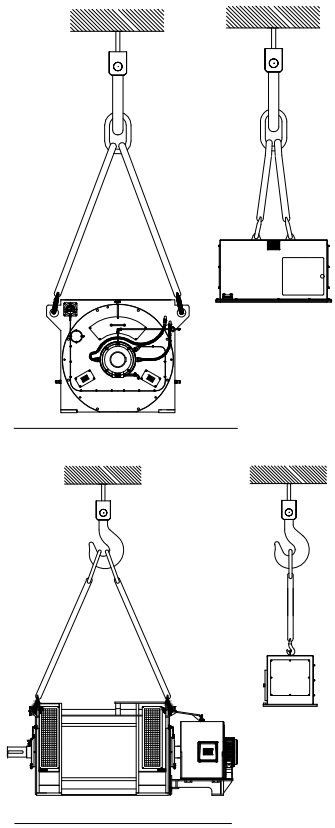

Figure 3.1: Handling of generator with IM1001T/B3T mounting

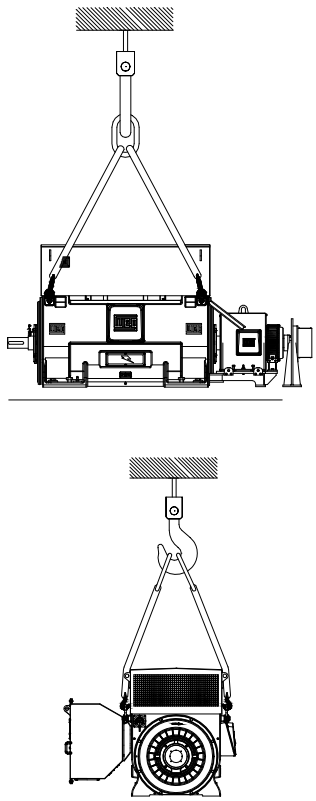

Figure 3.2: Handling of generator with IM1001/B3L mounting

ATTENTION

- Observe the indicated weight. Do not lift the generator causing jolts or put it down abruptly on the floor, because this can cause damage to the bearings;
- Use only the lifting lugs in the generator frame;
- The lifting lugs on the heat exchanger, end shields, bearings, radiator, terminal box, etc. are designed to handle these components only separately;
- Never use the shaft to lift the generator;
- In order to move the generator, the shaft must be locked with the shaft locking device supplied with the generator.

Steel wire ropes, clevises and the lifting equipment must be able to stand the generator weight.

3.3 STORAGE

If the generator is not installed immediately after reception, it must remain inside the package and stored in a location protected against moisture, vapors, sudden changes in temperature, rodents and insects. The generator must be stored in vibration-free locations in order to avoid bearing damage.

ATTENTION

Space heaters must remain powered during storage in order to avoid water condensation inside the generator. Any damage to the paint or corrosion protection of the machined parts must be repaired.

3.3.1 Outdoor storage

The generator must be stored in a dry location, free of flooding and vibrations. Repair all damages occasionally caused to the packing during transportation before storing the generator, which is necessary to ensure proper storage conditions. Place the generator on platforms or foundations which ensure protection against humidity from the ground and prevent it from sinking into the soil. Free air circulation underneath the generator must be assured. The cover used to protect the generator against the bad weather must not be in contact with its surfaces. In order to ensure free air circulation between the generator and such covers, place wooden blocks as spacers.

3.3.2 Extended storage

When the generator is stored for a long period (two months or more) before the start-up, it is exposed to external agents, such as temperature variations, moisture, aggressive agents, etc. Empty spaces inside the generator, such as those in bearings, terminal box, and windings, are exposed to humidity, which may condense and, depending on the type and degree of air contamination, aggressive substances may also penetrate these empty spaces. Consequently, after long periods of storage, the winding insulation resistance may drop below the acceptable values, internal components, such as bearings, may oxidize, and the lubricant power of the lubricant agent in the bearings may be adversely affected. All of these influences increase the risk of damages before the generator start-up.

ATTENTION

For the generator warranty to be valid, it is necessary to make sure that all the preventive measures described in this manual, as well as constructive aspects, maintenance, packing, storage and periodical inspections be followed and recorded.

The extended storage instructions are valid for generators that remain stored for long periods (two months or more) before start-up or generators already installed and that are in a prolonged stoppage, considering the same period.

3.3.2.1 Storage location

In order to ensure the best storage conditions for the generator during long periods, the chosen location must strictly meet the criteria described in sections 3.3.2.1.1 and 3.3.2.1.2.

3.3.2.1.1 Indoor storage

- The storage site must be closed and covered;
- The site must be protected against moisture, vapors, aggressive agents, rodents and insects;
- Corrosive gases, such as chlorine, sulfur dioxide or acids, must not be present;
- The site must be free of vibration;
- The site must have a ventilation system with air filter;
- Ambient temperature between 5°C and 60°C, without sudden temperature variations;
- Relative humidity <50%;
- The site must be protected against dirt and dust accumulation;
- It must have a fire detection system;
- The location must have a power supply for the space heaters.

If any of these requirements is not met in the storage site, WEG recommends that additional protections be incorporated to the generator package during the storage period, as follows:

- A closed wooden crate or the like with an electrical installation that allows the energization of the space heaters;
- If there is risk of infestation and fungus formation, the package must be protected in the storage location by spraying it or painting it with appropriate chemicals;
- The package must be prepared carefully by an experienced person.

3.3.2.1.2 Outdoor storage

ATTENTION

Outdoor storage of the generator is not recommended.

In case outdoor storage is unavoidable, the generator must be packed in a specific package for such condition, as follows:

- For outdoor storage (exposed to the weather), besides the package recommended for indoor storage, the

package must be covered with protection against dust, moisture and other foreign materials, using resistant canvas or plastic.
- The package must be placed on platforms or foundations that ensure protection against dirt and moisture and keep it from sinking into the soil;
- After the package is covered, a shelter must be erected to protect it against direct rain, snow and excessive sun heat.

ATTENTION

In case the generator remains stored for long periods (two months or more), it is recommended to inspect it regularly as specified in the section 3.3.2.9 of this manual.

3.3.2.2 Separate parts

- If parts are supplied separately (terminal boxes, end shields, etc.), these parts must be packed as specified in sections 3.3.2.1.1 and 3.3.2.1.2 of this manual.
- The relative humidity inside the package must not exceed 50%.
- Rolling bearings must not be subject to shocks, falls or storage with vibration or humidity, which can cause marks on the internal races or on the balls, reducing their useful life.

3.3.2.3 Space heater

ATTENTION

The space heaters must remain powered during storage to avoid moisture condensation inside the generator and ensure that the winding insulation resistance remains within acceptable levels.

3.3.2.4 Insulation resistance

During the storage period, the insulation resistance of the generator windings must be measured and recorded every three months and before the generator installation. Any insulation resistance reduction must be investigated.

3.3.2.5 Exposed machined surfaces

All exposed machined surfaces (e.g., shaft end and flanges) are protected at the factory with a temporary protective agent (rust inhibitor). This protection coating must be reapplied every six months or when removed and/or damaged.
Recommended Product: Anticorit BW protective agent
Manufacturer: Fuchs

3.3.2.6 Bearings

3.3.2.6.1 Grease-lubricated rolling bearing

- The rolling bearings are lubricated at the factory to perform the tests of the generator;

ATTENTION

In order to keep the bearings in good condition during the storage period, every two months the shaft locking device must be removed, and the generator rotor must be rotated at least 10 full turns at a speed of 30 rpm to circulate the grease and preserve the internal parts of the bearings.

- Before putting the generator into operation, the rolling bearings must be lubricated;
- If the generator remains stored for a period exceeding two years, the rolling bearings must be disassembled, washed, inspected and relubricated.

3.3.2.6.2 Oil-lubricated rolling bearing

- Depending on the generator mounting position and on the lubrication type, the generator can be transported with or without oil in the bearings;
- The generator must be stored in its original operating position and with oil in the bearings, when specified;
- The oil level must be respected, remaining in the middle of the sight glass.

ATTENTION

In order to keep the bearings in good conditions during the storage period, every two months the shaft locking device must be removed, and the generator rotor must be rotated at least 10 full turns at a speed of 30 rpm to circulate the oil and preserve the internal parts of the bearings.

- After six months of storage and before putting the generator into operation, the rolling bearings must be relubricated.
- If the generator remains stored for a period exceeding two years, the rolling bearings must be disassembled, washed, inspected and relubricated.

3.3.2.6.3 Sleeve bearing

Depending on the machine mounting position and the lubrication type, the machine can be transported with or without oil in the bearings.
The machine storage must be done in its original operating position and with oil in the bearings, when so specified.
The oil level must be respected, remaining in the middle of the sight glass.
In order to keep the bearings in good conditions during the storage period, the following preservation procedures must be performed:
- Close all the threaded holes with plugs;
- Check if all the flanges (e.g., oil inlet and outlet) are closed. If not, they must be closed with blind covers;
- The oil level must be respected, remaining in the middle of the oil sight glass;
- Every two months the shaft locking device should be removed the shaft, add between 100 and 200ml of lubricating oil through the sight glass at the top of the bearing and rotate the shaft which can be done manually with the help of a lever, two or three complete turns are sufficient.

NOTES

For bearings that have a high-pressure oil injection system (jacking), this system must be activated before rotating the machine rotor.
For bearings without an internal oil reservoir (dry sump) and for thrust and counter-bearings, the oil circulation system must be activated to turn the machine shaft.
The shaft rotation must always be done in the machine rotation direction.

If it is not possible to rotate the machine shaft, as recommended, after six months of storage, the following procedure must be used for protecting both the bearing internally and the contact surfaces against corrosion:
- Close all the threaded holes with plugs;
- Seal the gaps between the shaft and the bearing seal on the shaft by applying water-proof adhesive tape;
- Check if all the flanges (e.g., oil inlet and outlet) are closed. If not, they must be closed with blind covers;
- Remove the upper sight glass from the bearing and apply the corrosion inhibitor spray (TECTYL 511 or equivalent) inside the bearing;
- Close the bearing with the upper sight glass.

NOTES

If the bearing has no upper sight glass, the top cover of the bearing must be disassembled to apply the corrosion inhibitor spray.

Each six months of storage, repeat the procedure described above.

If the storage period ***exceeds two years***.
- Disassemble the bearing;
- Preserve and store the parts.

3.3.2.7 Terminal box

When the insulation resistance of the generator windings is measured, the main terminal box and the other terminal boxes must also be inspected, observing the following aspects:
- The inside must be dry, clean and free of dust accumulation;
- The contact elements cannot present corrosion;
- The seals must be in proper condition;
- The cable inlets must be correctly sealed.

ATTENTION

If any of these items are not in proper condition, proceeds the adequate maintenance and, if necessary, replace damaged parts.

3.3.2.8 Inspections and records during storage

The stored generator must be inspected periodically and inspection records must be filed.
The following points must be inspected:
1. Physical damages;
2. Cleanliness;
3. Signs of water condensation;
4. Protective coating conditions;
5. Paint conditions;
6. Signs of aggressive agents;
7. Satisfactory operation of space heaters. It is recommended that a signaling or alarm system be installed in the location in order to detect power interruption on the space heaters;
8. Record the ambient temperature and relative humidity around the generator, the winding temperature (using RTDs), the insulation resistance and the polarization index;
9. Storage site, so that it complies with the criteria described in section 3.3.2.1.

3.3.2.9 Maintenance plan during storage

During the storage period, the generator maintenance must be performed and recorded according to the plan described in Table 3.1.

Table 3.1: Storage plan

	Monthly	2 months	6 months	2 years	Before start-up	Notes
Storage Location						
Inspect the cleanliness conditions		x			x	
Inspect the humidity and temperature conditions		x				
Check for signs of insect infestation		x				
Package						
Inspect for damages			x			
Check the internal relative humidity		x				
Change the dehumidifier in the package (if any)			x			Whenever necessary
Space heater						
Check the operating conditions	x					
Whole generator						
Perform external cleaning			x		x	
Check the painting conditions			x			
Check the rust inhibitor on the exposed machined parts			x			
Reapply the rust inhibitor			x			
Windings						
Measure the insulation resistance		x			x	
Measure the polarization index		x			x	
Terminal box and grounding terminals						
Clean the interior of the boxes				x	x	
Inspect the seals and gaskets				x	x	
Grease or oil-lubricated rolling bearing						
Rotate the shaft		x				
Relubricate the bearing			x		x	
Disassemble and clean the bearing						If the storage period exceeds 2 years
Sleeve bearings						
Rotate the shaft		x				
Apply anti-corrosion spray			x			
Clean the bearings and relubricate them					x	
Disassemble and store the parts						If the storage period exceeds 2 years

3.3.3 Preparation for commissioning

3.3.3.1 Cleaning

- The internal and external parts of the generator must be free of oil, water, dust, and dirt.
- Remove the rust inhibitor from the exposed surfaces with a cloth damped in a petroleum-based solvent;
- Make sure that the bearings and cavities used for lubrication are free of dirt and the cavity plugs are correctly sealed and tightened. Oxidation and marks on the bearing seats and on the shaft must be carefully removed.

3.3.3.2 Bearing inspection

ATTENTION

If the generator storage period exceeds six months, the sleeve bearings must be disassembled, inspected and cleaned, before starting the generator operation.
The sleeve bearings without oil tank (dry crankcase), regardless of the generator storage period, should necessarily be disassembled, inspected and cleaned before starting the generator operation.
Reassemble the sleeve bearings and carry out lubrication.
Contact WEG to perform this procedure.

3.3.3.3 Bearing lubrication

Use the lubricant specified for bearing lubrication. Information on the bearings and lubricants are indicated on the bearing nameplate, and the lubrication must be done as described in section 7.9 of this manual, always considering the type of bearing.

3.3.3.4 Insulation resistance verification

Before putting the generator into operation, the insulation resistance must be measured according to section 3.3.2.4 of this manual.

3.3.3.5 Others

Follow the other procedures described in section 6 of this manual before putting the generator into operation.

4 INSTALLATION

4.1 INSTALLATION SITE

Generators must be installed in easily accessible places, allowing periodic inspections, on-site maintenance and, if necessary, removal for external services.
The following environmental conditions must be ensured:

- Clean and well-ventilated location;
- The installation of other equipment or walls must not hinder or block the generator ventilation;
- The area around and above the generator must be sufficient for maintenance or handling;
- The environment must be in accordance with the generator protection degree.

4.2 SHAFT LOCK

The generator leaves the factory with a lock on the shaft to prevent damages to the bearings during transportation. This lock must be removed prior to generator installation.

ATTENTION

The shaft locking device must be installed whenever the generator is removed from its base (uncoupled) in order to prevent damages to the bearings during transportation. The shaft end is protected at the factory with a temporary protective agent (rust inhibitor). During the generator installation, it is necessary to remove this product from the grounding brush (if any) contact track on the shaft.

4.3 ROTATION DIRECTION

The rotation direction is indicated on a plate affixed to the drive end of the generator and in the generator specific documentation.

ATTENTION

Generators supplied with a single rotation direction must not operate in the opposite direction. In order to operate the generator in the opposite direction, consult WEG.

4.4 INSULATION RESISTANCE

4.4.1 Safety instructions

DANGER

In order to measure the insulation resistance, the generator must be turned off and stopped. The winding being tested must be connected to the frame and grounded until all residual electrostatic charges are removed. Capacitors (if any) must also be grounded before disconnecting and separating the terminals to measure the insulation resistance. Failure to comply with these procedures may result in personal injury.

4.4.2 General considerations

When the generator is not immediately put into operation, it must be protected against moisture, high temperatures, and dirt, avoiding impacts to the insulation resistance. The winding insulation resistance must be measured before putting the generator into operation. If the environment is too humid, the insulation resistance must be measured periodically during storage. It is difficult to establish fixed rules for the actual value of the winding insulation resistance, as it varies according to the environmental conditions (temperature, humidity), generator cleanliness conditions (dust, oil, grease, dirt), and quality and condition of the insulating material used. The evaluation of the periodical follow-up records is useful to conclude whether the generator is able to operate.

4.4.3 Measurement on the stator windings

The insulation resistance must be measured with a ***megohmmeter***. The testing voltage for the windings must be in accordance with Table 4.1, and according to IEEE43 standard.

Table 4.1: Voltage for the winding Insulation resistance test

Winding rated voltage (V)	Insulation resistance test - continuous voltage (V)
< 1000	500
1000 - 2500	500 - 1000
2501 - 5000	1000 - 2500
5001 - 12000	2500 - 5000
> 12000	5000 - 10000

Before measuring the stator winding insulation resistance:

- Disconnect all connections to the stator terminals;
- Disconnect and insulate all CTs and PTs (if any);
- Ground the generator frame;
- Measure the winding temperature;
- Ground all temperature sensors;
- Check the humidity;
- Disconnect the neutral grounding;
- Ensure that the generator bars are not grounded.

The insulation resistance measurement of the stator windings must be done in the main terminal box. The instrument (megohmmeter) must be connected between the generator frame and the winding. The frame must be grounded and the three phases of the stator winding must remain connected to the neutral point, as shown in Figure 4.1.

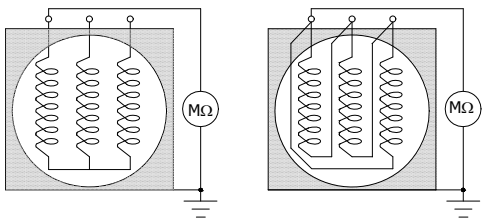

Figure 4.1: Megohmmeter connection

Whenever possible, each phase must be isolated and tested separately. The separate test allows a comparison between the phases. When a phase is tested, the other two phases must be grounded to the same ground of the frame, as shown in Figure 4.2.

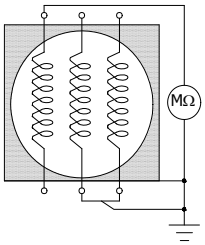

Figure 4.2: Connection of the megohmmeter to separate phases

If the total winding measurement presents a value below the recommended, the neutral connections must be opened and the insulation resistance of each phase must be measured separately.

> **ATTENTION**
>
> Much higher values may be frequently obtained in generators being operated for a long period of time. Comparison with values obtained in previous tests on the same generator - under similar load, temperature and humidity conditions – may be an excellent parameter to evaluate the winding insulation conditions, instead of using the value obtained in a single test as the basis. Significant or sudden reductions are considered suspicious.

4.4.4 Measurement on the rotor and exciter windings

Measurement on the rotor winding:
- Disconnect the rotor cables from the diode set and from the discharge resistor (if any);
- Connect the instrument to measure the insulation resistance (megohmmeter) between the rotor winding and the generator shaft. The measuring current must not pass through the bearings.

Measurement of the main exciter stator winding:
- Disconnect the power supply cables from the exciter;
- Connect the instrument to measure the insulation resistance (megohmmeter) between the exciter stator winding and the generator frame.

Measurement on the main exciter rotor winding:
- Disconnect the cables of the exciter rotor from the diode set;
- Connect the instrument to measure the insulation resistance (megohmmeter) between the exciter rotor winding and the generator shaft. The measuring current must not pass through the bearings.

Measurement of the auxiliary exciter stator winding (PMG), if any:
- Disconnect the cables that connect the auxiliary exciter to the voltage regulator;
- Connect the instrument to measure the insulation resistance (megohmmeter) between the auxiliary exciter stator winding and the generator frame.

4.4.5 Additional Information

> **ATTENTION**
>
> After measuring the insulation resistance, ground the tested winding in order to discharge it. The test voltage to measure the insulation resistance of the rotor and space heater must be 500 Vdc and for the other accessories 100 Vdc.
> It is not recommended to measure the insulation resistance of thermal protectors.

4.4.6 Polarization index

The polarization index is defined by the ratio between the insulation resistance measured in 10 minutes and the insulation resistance measured in 1 minute. This measurement procedure is always carried out at relatively constant temperatures. The polarization index allows the evaluation of the generator insulation conditions.

> **DANGER**
>
> In order to avoid accidents, the winding must be grounded immediately after measuring the insulation resistance.

4.4.7 Conversion of the measured values

The insulation resistance measured on the windings shall be converted to 40 ° C using the correction factor provided in Figure 4.3 (IEEE43 standard) and applying the following formula:

$$R_C = Kt \,.\, Rt$$

Where:
R40 = referred insulation resistance at 40 ° C
Kt = Insulation resistance correction factor as a function of temperature, as shown in Figure 4.3,
Rt = measured insulation resistance.

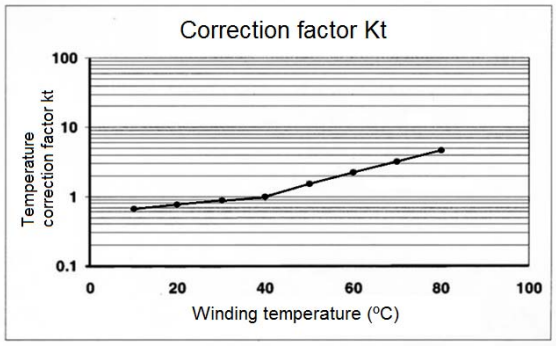

Figure 4.3: Insulation resistance correction factor due to temperature

The values used to generate the curve of Figure 4.3 are shown in table 4.2.

Table 4.2: Correction factors (Kt) due to temperature

t (ºC)	Correction factor (kt)
10	0,7
20	0,8
30	0,9
40	1,0
50	1,5
60	2,3
70	3,3
80	4,6

4.4.8 Polarization Index (P.I.)

The polarization index is defined by the ratio between the insulation resistance measured in 10 minutes and the insulation resistance measured in 1 minute. This measurement procedure is always carried out at relatively constant temperatures.
The polarization index allows the assessment of the motor insulation conditions.

DANGER

In order to avoid accidents, the winding must be grounded immediately after measuring the insulation resistance.

4.4.9 Recommended Minimum Values

According to IEEE-43 Standard, the recommended minimum values for winding insulation resistance (R.I.) and Polarization Index (I.P.) are shown in Table 4.3:

Table 4.3: Minimum R.I. e I.P values

Winding voltage	Minimum R.I. (converted to 40ºC)	Minimum I.P.
Up to 1000 V	5 MΩ	Not applicable
Greater than 1000 V	100 MΩ	2

4.5 PROTECTIONS

4.5.1 Thermal protections

The temperature sensors are installed on the main stator, bearings and other parts that require temperature monitoring and thermal protection. The terminals of the temperature sensors are available in the accessory box. These sensors must be connected to an external temperature monitoring and protection system.

4.5.1.1 Temperature sensors

Thermostats – Are bimetallic thermal detectors with normally closed silver contacts. They open at a certain temperature. The thermostats are connected in series or independently according to the connection diagram.

Thermistors (PTC or NTC) - Are thermal detectors composed of semiconductors that vary their resistance sharply when they reach a certain temperature. Thermistors are connected in series or independently according to the connection diagram.

NOTE

Thermostats and thermistors must be connected to a control unit in order to interrupt the generator operation or activate a signaling device.

RTDs (Pt100) - Are calibrated resistance elements. Their operation is based on the principle that the electrical resistance of a metallic conductor varies linearly with the temperature. The detector terminals must be connected to a control panel which includes a temperature meter.

NOTE

Resistance temperature detectors (RTD) allow the monitoring via the absolute temperature informed through their instantaneous resistance value. With this information the relay, which can be programmed for alarm and trip according to pre-defined values, is able to perform the temperature reading.

4.5.1.2 Temperature limits for the windings

The temperature of the hottest spot of the winding must be kept below the limit of the insulation thermal class. The total temperature is obtained by the sum of the ambient temperature and the temperature rise (T), plus the difference between the average temperature of the winding and the hottest spot of the winding.
The ambient temperature must not exceed 40 °C, in accordance with NBR IEC60034-1 standard. Above this temperature, the working conditions are considered special and the generator specific documentation must be consulted.
Table 4.4 shows the numerical values and the composition of the acceptable temperature of the hottest spot on the winding.

Table 4.4: Insulation class

Insulation class (ºC)	F	H
Ambient temperature	40	40
T = temperature rise (temperature measurement method by resistance variation)	105	125
Difference between the hottest point and the average temperature	10	15
Total: temperature of the hottest point	155	180

ATTENTION

If the generator operates with temperatures in the windings above the limit values of the insulation thermal class, the lifespan of the insulation and, consequently, of the generator, will be significantly reduced, or it may even result in the generator burnout.

4.5.1.3 Alarm and trip temperatures

The generator alarm and trip temperatures must be set at the lowest possible value. These temperatures can be determined based on the factory tests or through the motor operating temperature.
The alarm temperature can be set 10 ºC above the machine operating temperature at full load, always considering the highest ambient temperature on site.

ATTENTION

The alarm and trip values may be determined as a result of experience, but they must not exceed the values indicated in the motor wiring diagram.

ATTENTION

The motor protection devices are listed in the WEG drawing – Wiring diagram.
Not using these devices is the sole responsibility of the user and, in case of damage to the motor, it will void the warranty.

4.5.1.4 Temperature and ohmic resistance of the PT100 thermoresistance

Table 4.5 shows the temperature as a function of the ohmic resistance measured across PT100 RTDs.

Formula: $\frac{\Omega - 100}{0.386} = °C$

Table 4.5: Temperature X Resistance (Pt100)

° C	0	1	2	3	4	5	6	7	8	9
0	100.00	100.39	100.78	101.17	101.56	101.95	102.34	102.73	103.12	103.51
10	103.90	104.29	104.68	105.07	105.46	105.95	106.24	106.63	107.02	107.40
20	107.79	108.18	108.57	108.96	109.35	109.73	110.12	110.51	110.90	111.28
30	111.67	112.06	112.45	112.83	113.22	113.61	113.99	114.38	114.77	115.15
40	115.54	115.93	116.31	116.70	117.08	117.47	117.85	118.24	118.62	119.01
50	119.40	119.78	120.16	120.55	120.93	121.32	121.70	122.09	122.47	122.86
60	123.24	123.62	124.01	124.39	124.77	125.16	125.54	125.92	126.31	126.69
70	127.07	127.45	127.84	128.22	128.60	128.98	129.37	129.75	130.13	130.51
80	130.89	131.27	131.66	132.04	132.42	132.80	133.18	133.56	133.94	134.32
90	134.70	135.08	135.46	135.84	136.22	136.60	136.98	137.36	137.74	138.12
100	138.50	138.88	139.26	139.64	140.02	140.39	140.77	141.15	141.53	141.91
110	142.29	142.66	143.04	143.42	143.80	144.17	144.55	144.93	145.31	145.68
120	146.06	146.44	146.81	147.19	147.57	147.94	148.32	148.70	149.07	149.45
130	149.82	150.20	150.57	150.95	151.33	151.70	152.08	152.45	152.83	153.20
140	153.58	153.95	154.32	154.70	155.07	155.45	155.82	156.19	156.57	156.94
150	157.31	157.69	158.06	158.43	158.81	159.18	159.55	159.93	160.30	160.67

4.5.2 Protections in the panel

Table 4.6 indicates the protections generally used in drive system panels. In addition to these, other protection devices must be used as needed.

Table 4.6: Protections on the panel

POWER	PROTECTIONS
Up to 150 kVA – Low Voltage	50/51 – 52-59
From 150 to 1000 kVA – Low Voltage	27-49-50-59-50/51
Above 1000 kVA – Low Voltage	27-32-49-50G-51V-52-59
Up to 3000 kVA – Medium Voltage	CP-PR-27-32-49-50G-51V-52-59
3000 to 7500 kVA – Medium Voltage	CP-PR-32-40-46-49-50G-51V-52-59-87
Over 7500 kVA – Medium Voltage	CP-PR-27-32-40-46-49-50G-51V-52-59-78-81-87

SYMBOLOGY:
CP - Capacitor
PR – Lightning arrester
27 – Undervoltage
32 - Inverse power
40 - Field loss
46 - Current unbalance
49 - Overload
50G - Ground overcurrent
50 - Instantaneous overcurrent
51 - Timed overcurrent
51V - Voltage blocking overcurrent
52 - Circuit breaker
59 - Overvoltage
64 – Field grounding
78 - Phase angle
81 - Frequency
86 - Locking relay
87 - Differential

4.5.3 Space heater

When the generator is equipped with a space heater to prevent internal water condensation during long periods out of operation, it must be assured that the space heater is energized shortly after turning the generator off, and that it is de-energized before the generator is put into operation. The values of the space heater supply voltage and power are informed in the connection diagram and in the specific plate affixed to the generator.

4.6 COOLING

The generator cooling system may vary according to its application.
Only the proper installation of the generator and of the cooling system can ensure its continuous operation without overheating.

ATTENTION

The protection devices of the cooling system must be monitored periodically;
The air and/or water inlets and outlets must not be obstructed, because this could cause overheating and even lead to the generator burnout. For further details, refer to the generator dimensional drawing.

4.7 ELECTRICAL ASPECTS

4.7.1 Electrical connections

ATTENTION

Analyze the electrical connection diagram supplied with the generator carefully before beginning the connection of the power, grounding and accessory cables. For the electrical connection of the auxiliary equipment, refer to their specific manuals.

4.7.1.1 Main electrical connections

The location of the power, neutral and rotor terminal boxes are identified in the specific dimensional drawing of each generator.
The stator and rotor terminal identifications and their corresponding connections are indicated in the specific generator connection diagram.
Make sure the cross section and insulation of the connection cables are suitable for the generator current and voltage.
The generator must rotate in the rotation direction specified on the nameplate and/or on the plate affixed to the drive end of the generator.

NOTE

The rotation direction is, by convention, determined looking to the shaft end at the generator drive end.
Generators with a single rotation direction must only rotate in the indicated direction, since fans and other devices are unidirectional.
In order to operate the generator in the rotation direction opposite to the specified, consult WEG.

ATTENTION

Before making the connections between the generator and the power line, it is necessary to perform a careful measurement of the winding insulation resistance.

In order to connect the generator main power cables, unscrew the stator terminal box cover, cut the sealing rings (standard generators without cable gland) according to the diameter of the cables to be used and insert the cables in the sealing rings. Cut the power cables to the necessary length, strip the ends and mount the cable lugs that will be used.

4.7.1.2 Grounding

The generator frame and the main terminal box must be grounded before connecting the generator to the power line. Connect the metal sheath of the cables (if any) to the common grounding conductor. Cut the grounding conductor to the proper length and connect it to the terminal in the terminal box and/or frame.
Fasten all connections firmly.

ATTENTION

Do not use washers made of steel or other materials with low electrical conductivity to fasten the cable lugs.

4.8 MECHANICAL ASPECTS

4.8.1 Foundations

- The foundation or structure where the generator will be installed must be sufficiently rigid, flat, free of external vibration and capable to withstand the mechanical loads to which it will be submitted;
- If the foundation dimensioning is not carefully executed, this may cause serious vibration on the foundation set, generator and turbine;
- The foundation structural design must be done based on the dimensional drawing, on the information about the foundation mechanical loads, and on the generator anchoring method.
- The customer is responsible for the design and construction of the foundation according to the requirements described in Natural frequency of the base.

ATTENTION

Place shims of different thicknesses between the generator supporting surfaces and the foundation in order to allow a precise alignment.

NOTE

The user is responsible for dimensioning and building the foundation where the generator will be installed.

4.8.2 Foundation loads

The foundation loads are informed in the generator documentation.

4.8.3 Base types

4.8.3.1 Concrete base

Concrete bases are the most widely used for the installation of electric generators.
The type and size of the foundation, bolts and anchoring plates depend on the generator size and type.

4.8.3.2 Metal base

The generator must rest evenly on the metal base in order to prevent deformations of the frame. Occasional height errors of the surface that supports the generator can be corrected with compensation plates (shims).
Do not remove the generator from the common base to make the alignment. The base must be leveled on the foundation itself by using leveling instruments.
When a metal base is used to align the height of the generator shaft end to the coupled machine shaft end, it must be leveled on the concrete base.
After the base has been leveled, the anchor bolts tightened and the couplings checked, the metal base and the anchor bolts can be cemented.

4.8.4 Natural frequency of the base

In order to ensure a safe operation, the generator must be precisely aligned with the coupled equipment and both must be properly balanced. As a requirement, the generator installation base must be flat and meet the requirements of DIN 4024-1 standard. In order to verify if the criteria of the standard are being met, the following potential vibration excitation frequencies generated by the generator and coupled machine must be evaluated:

- The generator rotation frequency;
- The double of the rotation frequency;
- The double of the generator electric frequency. According to DIN 4024-1 standard, the natural frequencies of the base or foundation must be away from these potential excitation frequencies, as specified next:
- The first natural frequency of the base or foundation (first order natural frequency of the base) must be out of the range from 0.8 to 1.25 times any of the potential excitation frequencies above;
- The other natural frequencies of the base or foundation must be out of the range from 0.9 to 1.1 times any of the potential excitation frequencies above;

4.8.5 Mounting

ATTENTION

Mount the generator in a safe way and align it properly. The inadequate mounting can generate excessive vibration, causing early wear of the bearings and even break the shaft.

4.8.6 Anchor plate set

The anchor plate set, when used, is composed of the anchor plate, leveling bolts, leveling shims, alignment bolts and anchor bolts.

NOTES

When WEG supplies the anchor plate for fastening and aligning the generator, the dimensional and installation details of the anchor plate are supplied in the specific dimensional drawing of the generator.

The user is responsible for mounting, leveling and grouting the anchor plates (except when specific agreement establishes otherwise).

The anchor bolts must be fastened according to Table 4.7.

Table 4.7: Tightening torque of the anchor bolts

Type Ø	Tightening torque (*) Nm
M30	550
M36	960
M42	1460
M48	2200
M56	3500

** using lubricant paste for the bolts (Molykote P37)*

After positioning the generator, perform the final leveling by using the vertical leveling bolts and the leveling shims.

ATTENTION

Protect all the threaded holes to prevent grout from penetrating the threads during the grouting of the anchor plate and anchor bolts.

4.8.7 Leveling

The generator must rest on a surface with flatness of up to 0.08 mm/m.
Verify whether the generator is perfectly leveled both in the vertical and horizontal planes. Make the proper adjustments by placing shims under the generator. The generator leveling must be checked with proper equipment.

Leveling shims

During the generator mounting, leveling shims must be inserted between the generator and the anchor plate, so that the alignment procedure begins with this amount of shims, as follows:

- 3 mm of stainless steel shims (2 mm + 1 mm) or
- 5,40 mm galvanized steel shims (2,7 mm + 2,7 mm)

The other shims shown in Table 4.8 will be kept aside to be used in different combinations in order to obtain the necessary thicknesses to provide the required leveling. The maximum thickness of the leveling shims must not exceed 4.5 mm.
Table 4.8 shows the quantity of stainless steel shims or galvanized steel shims for each generator support region on the anchor plate.

Table 4.8: Leveling shims

Stainless steel shims		Galvanized steel shims	
Quantity (un.)	Thickness (mm)	Quantity (un.)	Thickness (mm)
2	0,1	2	0,43
2	0,2	2	0,50
2	0,5	1	0,65
2	1	1	0,80
1	2	1	1,95
-	-	2	2,70

4.8.7.1 Support

NOTE

At least 75% of the support surfaces area of the generator feet must be supported on the base.

4.8.8 Alignment

The generator must be properly aligned with the coupled machine.

ATTENTION

Incorrect alignment may result in bearing damages, generate excessive vibration and even break the shaft.

The alignment must be done according to the coupling manufacturer recommendations.
The generator and coupled machine shafts must be aligned in the axial and radial directions, as shown in Figure 4.4 and Figure 4.5.

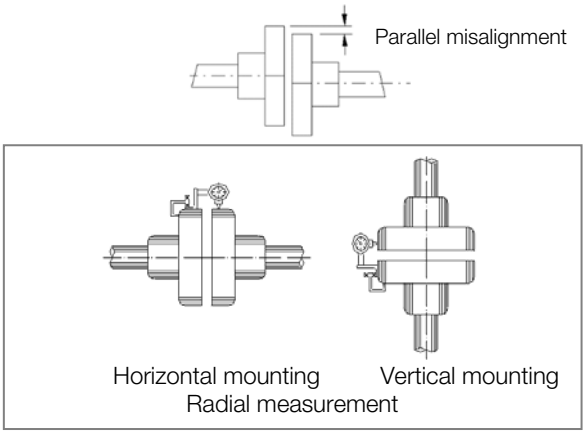

Figure 4.4: Parallel alignment

Figure 4.4 shows the parallel misalignment of the two shaft ends and the practical way to measure it by using suitable dial gauges.
The measurement is performed in four points 90° away from each other with the two half-couplings rotating together to eliminate effects of support surface irregularities on the dial gauge tip. Choosing the upper vertical point as 0°, half the difference between the dial gauge measurements at the 0° and 180° points represents the vertical coaxial error. In case of deviation, it must be corrected by adding or removing leveling shims.
Half of the difference between the dial gauge measurements at the 90º and 270º points represents the horizontal coaxial error.
These measurements indicate when it is necessary to lift or lower the generator, or move it to the right or to the left on the drive end in order to eliminate the coaxial error.
Half of the maximum difference among the dial gauge measurements in a complete rotation represents the maximum eccentricity found.
The misalignment in a complete shaft rotation, with rigid or semiflexible coupling, cannot exceed 0.03 mm.
When flexible couplings are used, greater values than those indicated above are acceptable, provided that they do not exceed the value allowed by the coupling manufacturer.
It is recommended to keep a safety margin for these values.

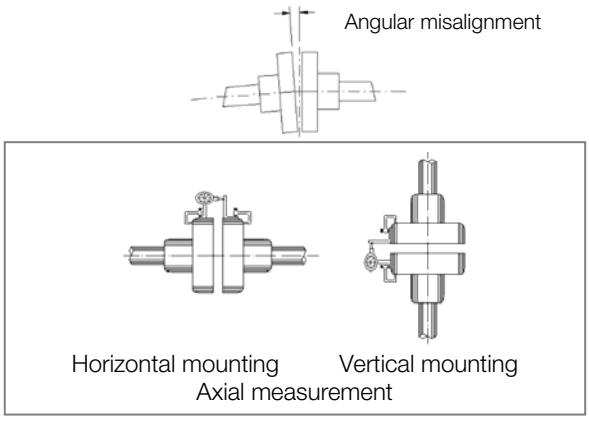

Figure 4.5: Angular alignment

Figure 4.5 shows the angular misalignment and a practical form to measure it.
The measurement is done in four points 90° away from each other, with the two half-couplings rotating together to eliminate effects of support surface irregularities on the dial gauge tip. Choosing the upper vertical point as 0°, half of the difference between the dial gauge measurements at the 0° and 180° points represents the vertical misalignment. In case of deviation, it must be corrected by adding or removing alignment shims.
Half the difference between the dial gauge measurements at the 90° and 270° points represents the horizontal misalignment, which must be corrected by displacing the generator in the lateral/angular direction.
Half of the maximum difference among the dial gauge measurements in a complete rotation represents the maximum angular misalignment found.
The misalignment in a complete shaft rotation, with rigid or semiflexible coupling, must not exceed 0.03 mm.
When flexible couplings are used, greater values than those indicated above are acceptable, provided that they do not exceed the value allowed by the coupling manufacturer.
It is recommended to keep a safety margin for these values.
In the alignment/leveling, the influence of temperature on the generator and coupled machine must be taken into account. Different expansions of the parts may change the alignment/leveling conditions during operation.

ATTENTION

After aligning the set and having assured a perfect alignment ***(both hot and cold)***, the generator must be doweled to the anchor plate or to the base, according to the information in the generator dimensional drawing.

4.8.9 Couplings

Only proper couplings, which convey only torque without generating transversal forces, must be used.
For both flexible and rigid couplings, the shaft centers of the coupled machines must be in a single line.
Flexible couplings mitigate the effects of residual misalignments and prevent transmission of vibration between the coupled machines, which does not occur when rigid couplings are used.
The coupling must be mounted or removed with the aid of proper devices and never by means of rudimentary tools, such as hammers, sledgehammers, etc.
Follow the manufacture's instructions when mounting or removing couplings or other drive elements and cover them with a touch guard. For trial run in uncoupled state, lock or remove the shaft end key. Avoid excessive radial and axial bearing loads (note manufacture's documentation). The balance of the machine is indicated as H= half and F= full key. In half key cases coupling must be half key balanced without a key. In case of protruding, visible part of the shaft end key, establish mechanical balance.

ATTENTION

Dowel pins, nuts, washers and leveling shims may be supplied with the generator when requested in the purchase order.

NOTES

The user is responsible for the generator installation (except when specified by commercial agreement).
WEG is not liable for damages to the generator, associated equipment and installation occurred because of:
- Transmission of excessive vibration;
- Poor installations;
- Faulty alignment;
- Improper storage conditions;
- Noncompliance with the instructions before start-up;
- Incorrect electrical connections.

4.8.9.1 Direct coupling

Because of issues about cost, space economy, problems with belt sliding and more safety against accidents, direct coupling must be used whenever possible. Also, direct coupling is preferable in case of transmission with reduction gearing.

ATTENTION

Align the shaft ends carefully, and, whenever possible, use flexible coupling, leaving a minimum clearance (E) of 3 mm between the couplings, as shown in Figure 4.6.

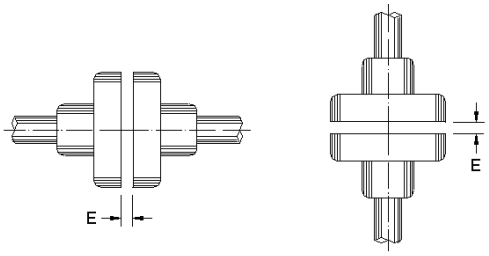

Figure 4.6: Axial clearance of the coupling (E)

4.8.9.2 Gear coupling

Gear couplings badly aligned generate vibration in the transmission itself and in the generator. Therefore, caution must be taken so that the shafts be perfectly aligned, rigorously parallel in case of spur gear transmissions and in a correct angle in case of transmissions by bevel or helical gears.
The gear teeth meshing can be controlled with the insertion of a paper strip, on which the trace of all teeth shows up after a gear turn.

4.8.9.3 Coupling of generators equipped with sleeve bearings

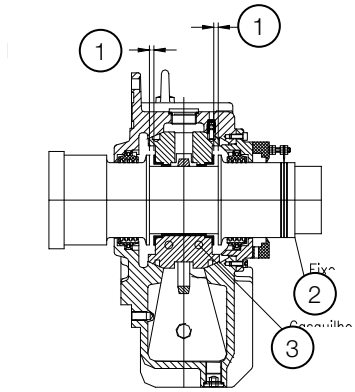

Figure 4.7: Sleeve bearing

Figure 4.7 legend:
1. Axial clearance
2. Shaft
3. Bearing shell

ATTENTION

Generators equipped with sleeve bearings must operate with direct coupling to the driving machine or by means of a gear box. This kind of bearing does not allow belt drive.

Generators equipped with sleeve bearings have three marks on the shaft end, so that the central mark (painted red) is the indication of the magnetic center, and the two outer marks indicate the allowed limits for axial rotor movement.

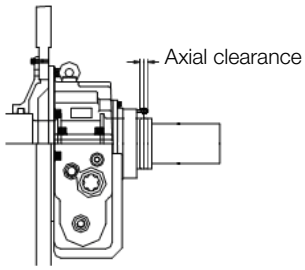

Figure 4.8: Magnetic center mark

For the generator coupling, the following factors must be taken into account:
- Bearing axial clearance;
- Axial displacement of the driving machine (if any);
- Maximum axial clearance allowed by the coupling.

ATTENTION

- Move the shaft completely forwards and then perform the correct measurement of the axial clearance;
- Align the shaft ends carefully and, whenever possible, use flexible coupling, leaving a minimum axial clearance of 3 to 4 mm between the couplings.

NOTE

If it is not possible to move the shaft, then the shaft position, the shaft forward displacement (according to the marks on the shaft), and the axial clearance recommended for the coupling must be considered.

- Before putting it into operation, it is necessary to check whether the generator shaft allows free axial movement within the aforementioned clearance conditions;
- In operation, the arrow must be positioned on the central mark (red), which indicates that the rotor is in its magnetic center;
- During the start, or even in operation, the generator may move freely between the two outer limit marks.

ATTENTION

The sleeve bearings used on this generator were not designed to withstand constant axial loads; therefore, under no circumstances can the generator continuously operate under axial load on the bearings.
The generator can only operate continuously under axial and/or radial loads on the bearing if the criteria informed in the machine documentation are observed.

4.9 BRAKE

For further information on the installation, operation and maintenance of the brake (if any), refer to the generator dimensional drawing and the specific manual of this equipment.

4.10 HYDRAULIC UNIT

For further information on the installation, operation and maintenance of the hydraulic unit (if any), refer to the generator dimensional drawing and the specific manual of this equipment.

5 OPERATION PRINCIPLE

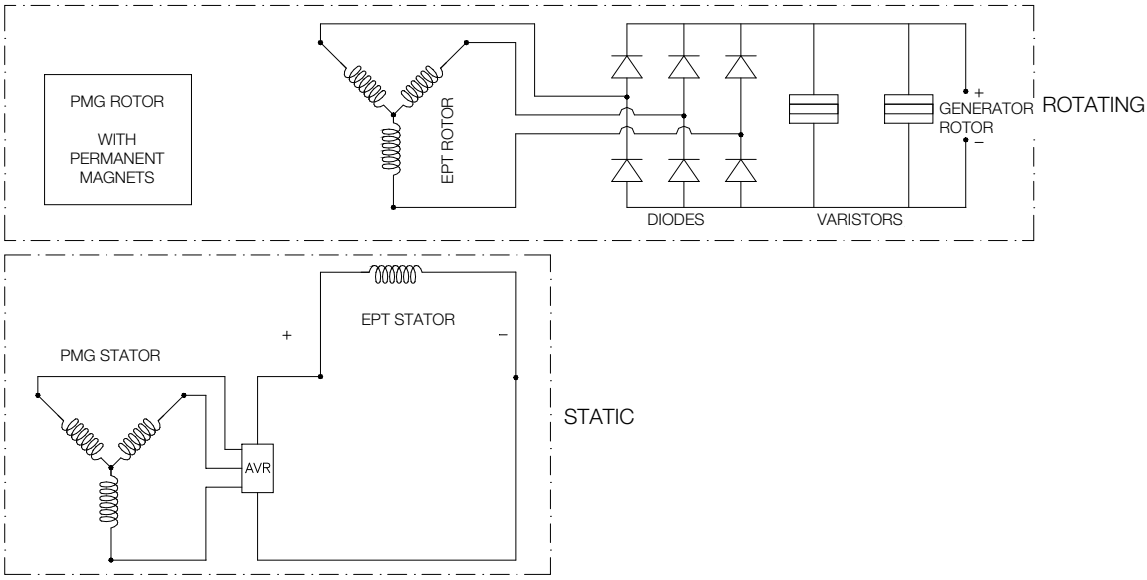

Figure 5.1: Internal electric circuits of the generator with auxiliary exciter (PMG)

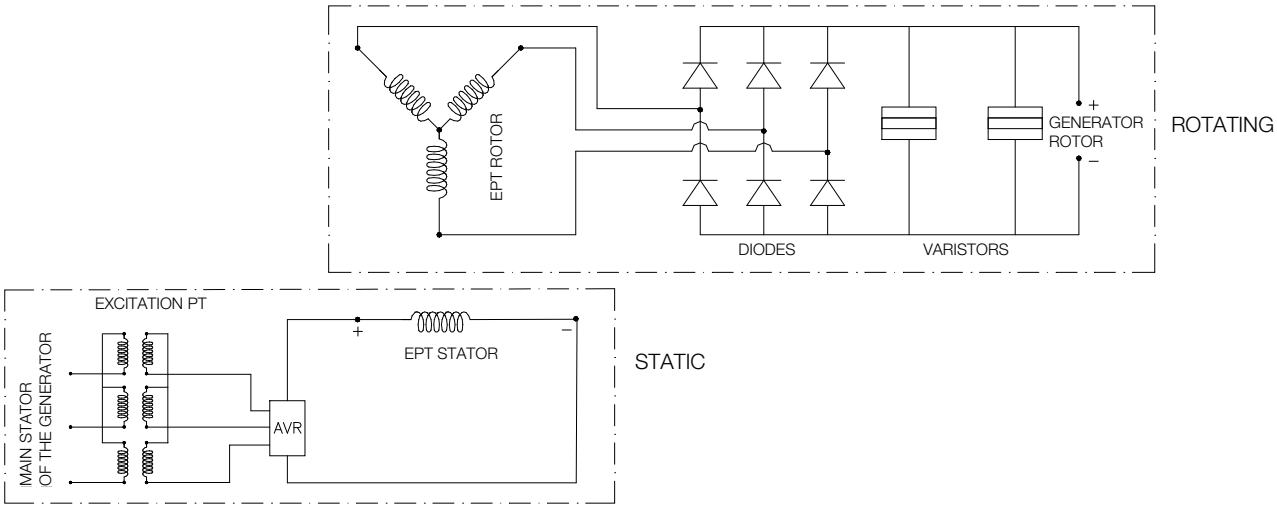

Figure 5.2: Internal electric circuits of the generator without PMG

5.1 EXCITATION

PMG Excitation
While being driven by the primary machine and reaching the rated speed, the generator begins the excitation process, in which the voltage generated by the auxiliary exciter feeds the power circuit of the voltage regulator.
The voltage regulator, when enabled, rectifies this voltage and feeds the main three-phase exciter stator of the generator with direct current.
The alternate voltage generated by the main exciter rotor is rectified by means of rotary diodes and feeds the poles of the main rotor.
The generator voltage increases from the residual value up to the preset rated voltage, and it is regulated by means of the sensing voltage monitoring in the electronic voltage regulator.
The sensing voltage for the voltage regulator must be obtained through the reference PTs connected to the generator main terminals.

Excitation without PMG
While being driven by the primary machine and reaching the rated speed, the generator begins the excitation process, in which the voltage generated in the generator main stator, by means of residual magnetism, is lowered by the excitation transformer and feeds the power circuit of the voltage regulator.
The voltage regulator, when enabled, rectifies this voltage and feeds the main exciter stator of the generator with direct current.
The alternate voltage generated by the main exciter rotor is rectified by means of rotary diodes and feeds the poles of the main rotor.
The generator voltage automatically increases in a ramp from the residual value up to the preset rated voltage and it is regulated by means of the monitoring of the sensing voltage in the electronic voltage regulator. The sensing voltage for the voltage regulator must be obtained through the reference PTs connected to the generator main terminals.

ATTENTION

In order to begin the excitation process of shunt generators, it may be necessary to use an external pre-build-up circuit (DC supply), since the generator residual magnetism may not be enough for the voltage build-up.
Verify in the voltage regulator manual the procedure to enable this function during the excitation process.

DANGER

When in no-load operation, at rated speed and without excitation voltage, the generator will have on its terminals a residual voltage because of the residual magnetism present on the exciter magnetic core.
These voltage levels may cause serious accidents, which may be fatal. It is advisable not to handle the generator while the rotor is moving.

- Generators with a rated voltage of 440 V may present a residual voltage of 180 V.
- Generators with a rated voltage of 13800 V may present a residual voltage of 1000 V.

5.2 DE-EXCITATION

The generator complete de-excitation is done by stopping the generator or switching off the voltage regulator.
By switching off the voltage regulator, the de-excitation of the generator is done through a freewheel circuit installed on the voltage regulator panel.
In order to perform maintenance tasks, the generator must be stopped, because only the de-excitation is not enough.

5.3 VOLTAGE REGULATOR

The voltage regulator must be parameterized according to the information of the manual of this equipment.

6 COMMISSIONING

When the generator is started for the first time or after a prolonged standstill, several aspects must be considered besides the regular operation procedures.

ATTENTION

- Avoid any contact with electric circuits;
- Even low-voltage circuits may be life threatening;
- In any electromagnetic circuit, overvoltages may occur under certain operating conditions;
- Do not open an electromagnetic circuit suddenly, because the presence of an inductive discharge voltage may break the insulation or injure the operator;
- In order to open those circuits, disconnect switches or circuit breakers must be used.

6.1 PRELIMINARY INSPECTION

Before the first operation of the generator or after long periods out of operation, the following items must be inspected:

1. Check if the generator is properly aligned;
2. Check if the generator feet were fixed with the torque recommended in this manual. The generator must be doweled to the base;
3. Check if the generator is clean and if the packages, measuring instruments and alignment devices were removed from the generating operating area;
4. Check if the generator is properly grounded;
5. Measure the insulation resistance of the windings, making sure they are within the specified value;
6. Check if coupling connecting components are in perfect operating conditions, duly tightened and greased, when necessary;
7. Check if the bearings are not damaged, if they are properly fixed and aligned;
8. Check if the bearings are properly lubricated. The lubricant must be of the type specified on the nameplate. Check the oil level of oil-lubricated bearings. Bearings with forced lubrication must have the oil pressure and flow as specified in their nameplate;
9. Check if the generator connection cables were installed according to the connection diagram and if the generator protection/excitation system is operating properly in the control panel;
10. Check if the voltage regulator is properly parameterized and operating according to the installation manual;
11. Check if the protection relay is parameterized and operating according to the selectivity study;
12. Check if the power grid cables are properly connected to the generator main terminals and ensure they are properly tightened and no short-circuit possibility exists;
13. The generator air inlets and outlets must be unobstructed;
14. The moving parts of the generator must be protected to prevent accidents;
15. The terminal box covers must be properly fastened;
16. Check if the brake is properly fixed and adjusted (if any). Check the operation of the brake control panel;
17. Test the hydraulic unit operation (if any), ensuring its proper operation;
18. When rotating the generator rotor, check if it does not present strange noises.

6.2 FIRST OPERATION WITHOUT LOAD

After all preliminary inspections have been carried out, proceed according to the directions below to perform the first operation of the generator:

1. Turn off the space heater;
2. Set the protections in the generator protection/excitation panel;
3. In oil-lubricated bearings, check the oil level;
4. In bearings with forced-lubrication, start the oil circulation system and check the level, flow and oil pressure, ensuring they comply with the data on the nameplate.
5. If the system has an oil flow detection device, it must be waited until the flow return signal from the oil circulation system of both bearings is received, which makes sure that the oil has reached the bearings;
6. Open the throttle valve bypass of the turbine water supply pipeline for the equalization of the water pressure;
7. Release the generator brake (if any);
8. Activate the turbine;
9. Increase the generator speed up to a value between one third and half the rated speed. Keep the generator at this speed and write down the temperatures in the bearings at intervals of one minute until they stabilize. Any sudden or continuous increase in the bearing temperature indicates lubrication or friction surface abnormality;
10. Monitor the temperature, oil level of the bearings and vibration levels. If there is a significant variation of any value, interrupt the generator start process, identify possible causes and make the necessary correction;
11. When the bearing temperatures stabilize at this reduced speed, the generator speed can be gradually increased to its rated value;
12. After these procedures, the generator can be excited;
13. When the generator is at rated speed, switch on the voltage regulator in the manual mode and, using an external voltage source (as recommended in the voltage regulator manual), perform the excitation in steps until the generator reaches the rated voltage;
14. Check the output voltage, the operation of all the instruments and the phase sequence of the generator;
15. All the control and measurement instruments must be monitored permanently so that occasional changes will be detected immediately and their causes solved before proceeding with the operation.

ATTENTION

After performing the first operation and making sure that the generator is working perfectly, one can proceed with the generator normal operation by connection it to loads or to the network. In order to operate the generator in automatic operation mode (normal operation), the generator must be shut down and the excitation PT secondary terminals connected to the power circuit of the electronic voltage regulator.

6.3 OPERATION

To put the generator into operation, proceed according to the following directions:

1. Turn off the space heater;
2. Set the protections in the control panel;
3. Switch on the hydraulic unit (if any);
4. Switch on the oil circulation system of the bearings (if any); Check the level, flow and pressure of the oil, making sure that they comply with the data on the nameplate;
5. The pressure or flow return signal of the oil circulation system in the bearings must be confirmed, making sure that the oil has reached the bearings;
6. Open the throttle valve bypass of the turbine water supply pipeline for the equalization of the water pressure;
7. Release the generator brake (if any);
8. Activate the hydraulic turbine adjusting the generator rated speed;
9. Set the voltage regulator for the automatic mode adjusting the reference voltage for the generator rated voltage.
10. When the generator reaches the rated speed, switch on the voltage regulator. It must excite the generator until it reaches the rated voltage.

ATTENTION

All the control and measurement instruments must be monitored permanently so that occasional changes will be detected immediately and their causes solved before proceeding with the operation.

6.3.1 Connection to the load or electric power system (Grid)

- Check the generator phase sequence:

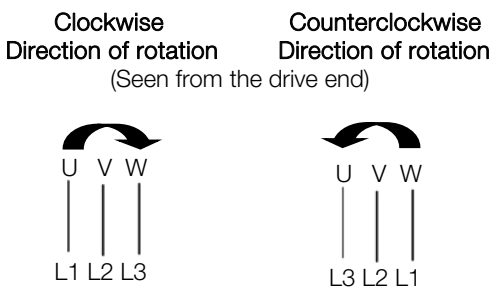

Figure 6.1: Phase Sequence (IEC60034-8)

- In order to connect the generator to the load in the individual (single) mode, it must be with the same rated voltage and the same phase sequence as the load;
- When the generator works connected to the power electric system (utility company grid), before making the connection, the generator and grid voltages must have the same phase sequence and be in synchronism.

ATTENTION

The generator terminals must only be connected to the power grid when the voltage signals are synchronized and the phase sequences are the same.

6.3.2 Synchronization of the generator with the power grid

In order to synchronize the generator with the line:

- Put the voltage regulator into operation and let it control the generator voltage;
- Adjust the generator voltage until it equals the grid voltage;
- Vary the generator speed until the grid voltage and the generator voltage are in phase;
- With the generator and grid voltages equal and in phase, close the circuit breaker that connects the generator to the line.

Recommended data for synchronization:

- $\Delta U = +4\%$ and -2%
- $\Delta f = +0.18$Hz and -0.10Hz
- Phase angle lower than 8°

The maximum values of $\Delta U = 5$ % and $\Delta f = 2$ % must not be exceeded.

6.3.3 Data recording

The following data must be collected and recorded periodically during the generator operation:

- Temperature of the bearings;
- Oil level of the bearings;
- Stator winding temperature;
- Air inlet and outlet temperatures;
- Vibration level;
- Field and stator voltage and current.
-

At the beginning of operation, the values must be checked every fifteen minutes. After some hours of operation, check these values every hour. After some time, these intervals may be progressively increased, but those values must be recorded daily for a period of five to six weeks.

6.3.4 Temperatures

- The temperature of the bearings, stator winding and ventilation air (if any) must be monitored while the generator is operating.
- The temperature of the bearings and stator winding stabilize in a period between four to eight hours of operation;
- The stator winding temperature depends on the generator load condition. Therefore, its operation data (voltages, currents, frequency) must be monitored during the generator operation.

6.3.5 Bearings

The system start, as well as the first hours of operation, must be monitored carefully.
Before putting the generator operation, verify:

- If the high-pressure oil injection system (if any) is ON;
- If the external lubrication system (if any) is ON;
- If the used lubricant complies with all specifications;
- The lubricant characteristics;
- The oil level (oil-lubricated bearings);
- If the bearing alarm and trip temperatures are set;

During the first starting, it is important to pay attention to abnormal vibrations or noises. If the bearing is not running silently and smoothly, the generator must be shut down immediately.
In case of overheating, the generator must be shut down immediately, bearings and temperature sensors must be inspected and the causes corrected;
The generator must operate for several hours until bearing temperatures stabilize within the specified limits;
After the bearing temperatures stabilize, check if there are no leaks through the plugs, gaskets or shaft end.

6.3.6 Vibration

Permissible vibration levels must be obtained directly from the standard regarding the generator.

Table 6.1: Standards to evaluate the vibration in coupled generators

Application	Measurement in non-rotating parts	Measurement in rotating parts
Hydrogenerators	ISO 10816-5	ISO 7919-5 VDI2059-5

6.3.7 Vibration causes

Common causes of vibration are:
- Misalignment between the generator and driving equipment;
- Improper fastening of the generator to the base, with *"loose shims"* under one or more of the generator feet, and loose fastening bolts;
- Improper or insufficiently rigid base;
- External vibrations from other equipment.

ATTENTION

Operating the generator with vibration levels above the values provided in the standard may impair its useful life and/or performance.

6.4 SHUTDOWN

In order to shut down the generator, proceed as follows:
- Reduce the turbine water inlet until the generator output power (kW) becomes null;
- Open the generator armature circuit breaker;
- Switch off the voltage regulator;
- Completely close the turbine distributor;
- Apply the brakes as informed in the generator technical documentation;

After the generator stops completely:
- Switch off the oil circulation system of the bearings (if any);
- Switch off the hydraulic unit (if any);
- Switch on the space heaters. They must be kept ON until the next generator operation.

DANGER

Even after the de-excitation, there can be voltage present at the generator terminals. Therefore, any job can only be performed after the full stop of the equipment. Failure to observe the points described above is life threatening.

7 MAINTENANCE

7.1 GENERAL

A proper maintenance program includes the following recommendations:

- Keep clean the generator and associated equipment;
- Measure the winding insulation resistance periodically;
- Measure the temperature of windings, bearings and cooling system periodically ;
- Check the wear, operation of the lubrication system and useful life of the bearings;
- Measure the generator vibration levels;
- Inspect the cooling system;
- Inspect associated equipment;
- Check all the generator accessories, protections and connections, ensuring that they are operating properly.

ATTENTION

Noncompliance with the recommendations of section 7.1 may cause undesired stoppages of the equipment.
The frequency of such inspections depends on local application conditions.
Every time that it becomes necessary to transport the generator, the shaft must be properly locked to prevent damages to the bearings. Use the device supplied with the generator to lock the shaft.
If the generator requires reconditioning or replacement of any damaged part, consult WEG.

7.2 GENERAL CLEANING

- Keep the frame clean, without external accumulation of oil or dust, in order to facilitate the heat exchange with the environment;
- The inside of the generator must also be kept clean, and free from dust, debris and oils;
- For cleaning, use brushes or clean cotton cloths. If the dust is not abrasive, the cleaning must be done with an industrial vacuum cleaner, “aspiring” the dirt from the fan cover and the dust accumulated on the fan blades and on the frame;
- The grounding brush compartment (if any) must be kept clean, without dust accumulation;
- Debris impregnated with oil or moisture can be removed with a cloth soaked in appropriate solvents;
- Clean the terminal boxes when necessary. Terminals and connectors must be kept clean, free of rust and in perfect operating conditions. Avoid the presence of grease or verdigris in the connection parts.

7.3 WINDING INSPECTIONS

Yearly, the windings must be submitted to a complete visual inspection, recording and repairing all and every damage or defect observed.
The winding insulation resistance measurements must be done at regular intervals, especially during humid weather and after prolonged generator stoppages.
Low values or sudden variations in the insulation resistance must be investigated.
The windings must be submitted to complete visual inspections at frequent intervals, recording and repairing all and every damage or defect observed.
The winding insulation resistance may be increased up to a proper value in points where it is low (due to excessive dust and moisture) by means of dust removal and by drying the winding moisture.

7.4 WINDING CLEANING

In order to obtain a more satisfactory operation and a longer useful life of the insulated windings, it is recommended to keep them free of dirt, oil, metal dust, contaminants, etc.
Therefore, it is necessary to inspect and clean the windings periodically, according to the recommendations of the "Maintenance Plan" of this manual. If reimpregnation is necessary, consult WEG.
The windings may be cleaned with an industrial vacuum cleaner with a non-metallic crevice tool or just a dry cloth.
For extreme dirt conditions, it may be necessary to use a proper liquid solvent for cleaning. This cleaning must be quick to prevent prolonged exposure of the windings to the solvent effects.
After being cleaned with solvents, the windings must be completely dried.
Measure the insulation resistance and the polarization index in order to assess the winding insulation conditions.
Winding drying time after cleaning varies depending on the weather conditions such as temperature, humidity, etc.

DANGER

Most solvents currently used are highly toxic and/or flammable.
Solvents must not be used in the straight parts of the coils of high-voltage generators, because they may affect the protection against corona effect.

7.4.1 Inspections

The following inspections must be carried out after the windings are carefully cleaned:

- Check the insulations of the windings and connections.
- Check if spacers, bindings, slot wedges, bandages and supports are properly fixed;
- Check for breaks, faulty welds, short-circuit between turns and against the frame in the coils and connections. In case any fault is detected, consult WEG.
- Ensure that all cables are properly connected and that terminal fixation components are duly tightened. Retighten, if necessary.

7.4.2 Re-impregnation

If any layer of resin on the windings is damaged during cleaning or inspection, such parts must be corrected with adequate material (in this case, consult WEG).

7.4.3 Insulation resistance

The insulation resistance must be measured after the completion of all of the maintenance procedures.

ATTENTION

Before putting the generator back into operation, it is essential to measure the winding insulation resistance and ensure that the measured values meet the specifications.

7.5 COOLING SYSTEM MAINTENANCE

NOTE

If the generator has filters in the air inlets and/or outlets, they must be cleaned with compressed air.
If the dust is difficult to remove, wash the filters with cold water and neutral detergent and dry them in the horizontal position;
In case the filters are impregnated with dust containing grease, it is necessary to wash them with gasoline, kerosene or another petroleum solvent or hot water with P3 additive;
All the filters must be dried after the cleaning. Do not twist them;
Replace the filter if necessary.

7.6 VIBRATION

Any evidence of increase in the unbalance or vibration of the generator must be investigated immediately.

ATTENTION

After torquing or disassembling any machine screw, it is necessary to apply Loctite.

7.7 SHAFT GROUNDING DEVICE

The shaft grounding brush (if any) avoids the circulation of electric current through the bearings, which is detrimental to their operation. The brush is put in contact with the shaft and connected by a cable to the generator frame, which must be grounded. Make sure that the brush holder fastening and its connection to the frame have been made correctly.

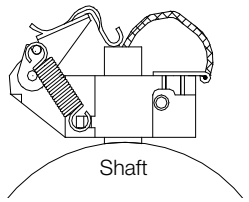

Figure 7.1: Shaft grounding brush

Drying oil is used to protect the generator shaft against rust during transportation. In order to ensure the proper operation of the grounding brush, this oil, as well as any residue between the shaft and the brush, must be removed before starting the generator. The brush must be constantly monitored during operation, and it must be replaced by another one of the same quality (granulation) at the end of its useful life.

7.8 EXCITER MAINTENANCE

7.8.1 Exciter

For the good performance of its components, the generator exciter compartment must be kept clean. Perform periodic cleaning in the windings following the procedures described in section 7.2 of this manual.

7.8.2 Insulation resistance

Check the insulation resistance of the main and auxiliary exciter windings periodically in order to determine their insulation conditions, following the procedures described in section 4.4.4 of this manual.

7.8.3 Diode test

Diodes are components that have great durability and do not require frequent tests. If the generator presents any defect indicating diode failure through the voltage regulator or an increase in the field current for the same load condition, then the diodes must be tested according to the following procedure:

NOTE

When testing the diodes, observe the polarity of the test terminals regarding the diode polarity.

1. Loosen the flexible cables of the 6 diodes;
2. With an ohmmeter, measure the resistance of each diode in both directions.

The diode is considered good when it presents low resistance (up to ± 100Ω) in its direct direction and high resistance (approximately 1 MΩ) in the reverse direction. Defective diodes will have a resistance of 0 Ω or greater than 1 MΩ in both directions. In most cases, the test method which uses an ohmmeter is sufficient to identify faults in the diodes. However, in some extreme cases it may be necessary to apply the blocking rated voltage and/or current circulation in order to detect fault in the diodes. Because of all the effort required to perform these tests, in case of doubt, it is recommended replace the diodes.

7.8.3.1 Diode Replacement

To replace any of the diodes, proceed according to the following directions:

1. Replace the damaged diodes by new diodes identical to the original ones, observing the position of each anode diode and each cathode diode;
2. The diodes are already supplied with insulated braided cable and connection terminal;
3. Clean the heatsink disk completely around the diode-mounting hole.
4. Check if the diode thread is clean and free of burs;
5. Apply thermal compound on the contacts;
6. Install the diode in its correct position using a torque wrench, observing the torques recommended in Table 7.1.

Table 7.1: Diode tightening torque

Thread of the diode base (mm)	Torque wrench head (mm)	Tightening torque (Nm)
M12	24	10
M16	32	30
M24	41	60

ATTENTION

It is of fundamental importance that the torque be respected in order to prevent damages to the diodes during the assembly.

7. After fastening the diodes, connect their ropes.

NOTE

The polarity of the diode is indicated by an arrow on its housing. When replacing the diodes, make sure they are installed in each part of the heatsink disk with the correct polarity.

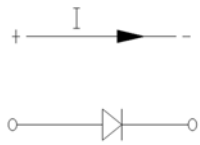

The current conduction must occur only in the anode-cathode direction, i.e. in the condition of direct polarization.

7.8.4 Varistor test

Varistors are components installed between the two halves of the rectifier bridge disk where the diodes are installed and have the purpose of protecting the diodes against overvoltage.
In case of failure of these components, they must be replaced.
In order to test the operation conditions of the varistors, use an ohmmeter.
The resistance of a varistor must be very high (± 20,000 ohms). In case of visible damage to the varistor or if its resistance is very low, it must be replaced.

7.8.4.1 Varistor replacement

In order to replace any of the varistors, proceed according to the following directions:

1. Replace the damaged varistors by new varistors identical to the original ones, according to the specification of the generator manufacturer;
2. To replace the varistor, loosen the screw that fixes it to the heatsink disk and the screw that fixes the varistor connection bridge to the opposite heatsink disk.
3. When removing the varistor, observe carefully how the components were assembled so that the new varistor will be installed in the same way;
4. Before mounting the new varistor, make sure all contact surfaces of the components (heatsink disks, shims, insulators and varistor) are leveled and smooth in order to assure a perfect contact between them;
5. Fix the new varistor by tightening the screw that fastens it to the heatsink disk just enough to allow a good electric connection. Excessive tightening can crack or damage the varistor.
6. Also, tighten the screw that fixes the connection bridge of the varistor to the heatsink disk.

7.9 BEARING MAINTENANCE

7.9.1 Grease-lubricated rolling bearings

7.9.1.1 Lubrication instructions

The lubrication system was designed in such a way that during the lubrication of the rolling bearings, all the old grease is removed from the rolling bearing races and expelled through a drain which enables the exit of the grease, but prevents the ingress of dust or other harmful contaminants.
This drain also prevents damage to the rolling bearings by the known problem of excessive lubrication.
It is recommended to make the lubrication with the generator in operation in order to ensure the renewal of the grease in the rolling bearing housing.
If that is not possible due to the presence of rotating parts near the grease nipple (pulleys, etc.) which may put the operator at risk, follow the procedures below:

- With the generator stopped, inject approximately half of the total intended amount of grease and operate the generator for approximately one minute at rated speed;
- Stop the generator and inject the rest of the grease.

ATTENTION

The injection of all the grease with the generator stopped may lead to the penetration of part of the lubricant into the generator through the internal seal of the rolling bearing cap.It is important to clean the grease nipples prior to lubrication in order to prevent foreign materials from being dragged into the rolling bearing. For lubrication, use only manual grease gun.

NOTE

The rolling bearing data, amount and type of grease and lubrication intervals are informed on a bearing nameplate affixed to the generator. Check this information before performing the lubrication.

- The lubrication intervals informed on the nameplate consider a 70°C working temperature of the rolling bearing;
- Based on the operating temperature ranges listed in Table 7.2, apply the following correction factors for the rolling bearing lubrication intervals:

Table 7.2: Reduction factor for lubrication intervals

Bearing operating temperature	Reduction factor
Below 60 ºC	1.59
Between 70 and 80 ºC	0.63
Between 80 and 90 ºC	0.40
Between 90 and 100 ºC	0.25
Between 100 and 110 ºC	0.16

7.9.1.2 Procedures for rolling bearing relubrication

1. Remove the drain cover;
2. Clean with a cotton cloth around the hole of the grease nipple;
3. With the rotor operating, inject the grease with a manual grease gun until grease starts coming out from the drain or until the proper amount of grease has been injected.
4. Keep the generator running long enough so that the grease excess passes through the drain;
5. Inspect the bearing temperature to make sure there was no significant change;
6. Put the drain plug back in place.

7.9.1.3 Rolling bearing relubrication with drawer device for grease removal

In order to relubricate the bearings, the old grease is removed by means of the device with a drawer installed on each bearing.
Lubrication procedure:
1. Before starting the lubrication of the bearing, clean the grease nipple with a cotton cloth;
2. Remove the rod with drawer to remove the old grease, clean the drawer and put it back in place;
3. With the generator running, inject the amount of grease specified on the rolling bearing nameplate by means of a manual grease gun;
4. The excess of grease comes out through the bearing lower drain and is deposited in the drawer;
5. Keep the generator running long enough for the grease excess to drain;
6. Remove the excess of grease, by pulling the drawer rod and cleaning the drawer. This procedure must be repeated as many times as necessary until the drawer no longer retains grease;
7. Inspect the bearing temperature to ensure that there was no significant change.

7.9.1.4 Type and amount of grease

The relubrication of the bearings must always be done with the original grease, specified on the bearing nameplate and in the documentation of the generator.

> **ATTENTION**
> WEG does not recommend the use of greases different from the original one.

It is important to perform a correct lubrication, i.e. to apply the correct grease and in the proper quantity, because either poor or excessive lubrication will damage the rolling bearings.
Excessive amount of grease cause temperature increase, due to the great resistance it offers to the movement of the bearing rotating parts. Consequently, due to the heating, the grease can completely lose its lubricating characteristics.

7.9.1.5 Grease compatibility

You can say that greases are compatible when the properties of the mixture lie within the property ranges of the greases individually.
In general, greases with the same type of soap are compatible; however, depending on the proportion of the mixture, there might be incompatibility. Therefore, it is not recommended to mix different types of grease without consulting the grease supplier or WEG.
Some thickeners and basic oils cannot be mixed, because they do not form a homogeneous mixture. In this case, one cannot rule the possibility of hardening or softening of the grease, or reduction of the dropping point of the resulting mixture.

> **ATTENTION**
> Greases with different types of base must never be mixed.
> For example: Lithium-based greases must never be mixed with sodium or calcium-based greases.

7.9.1.6 Bearing disassembly

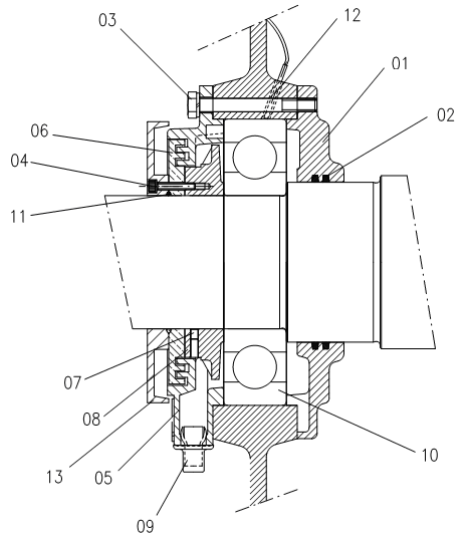

Figure 7.2: Parts of the grease-lubricated rolling bearing

Figure 7.2 legend:
1. *Inner bearing cap*
2. *White felt*
3. *Bearing cap fastening screw*
4. *Disc fastening screw*
5. *Outer bearing cap*
6. *Labyrinth taconite seal*
7. *Grease flinger fastening screw*
8. *Grease flinger*
9. *Grease collecting drawer*
10. *Rolling bearing*
11. *Grease nipple*
12. *Thermal protector*
13. *External closing disc*

Before disassembling:

- Remove the extension tubes from the grease inlet and outlet;
- Thoroughly clean the external part of the bearing;
- Remove the grounding brush (if any);
- Remove the temperature sensors from the bearing

Disassembly

In order to disassemble the bearing, proceed according to the directions below:

1. Remove the screws (4) that fix the closing disc (13);
2. Remove the Labyrinth taconite seal (6);
3. Remove the screws (3) from the bearing caps (1 and 5);
4. Remove the outer bearing cap (5);
5. Remove the screw (7) that fixes the grease flinger (8);
6. Remove the grease flinger (8);
7. Remove the D-end shield;
8. Remove the rolling bearing (10);
9. Remove the inner bearing cap (1), if necessary.

ATTENTION

- During the bearing disassembly, it is necessary to be careful not to damage the balls, rollers or shaft surface;
- Keep the disassembled parts in a safe and clean place.

7.9.1.7 Bearing assembly

- Clean the bearings completely and inspect the disassembled parts and the inside of the bearing caps;
- Make sure the rolling bearing, shaft and bearing cap surfaces are perfectly smooth;
- Fill up to ¾ of the inner and outer bearing cap deposits with the recommended grease (Figure 7.3) and lubricate the rolling bearing with enough grease before assembling it;
- Before assembling the rolling bearing on the shaft, heat it up to a temperature between 50 ºC and 100 ºC;
- For the complete assembly of the bearing, follow the disassembly instructions in the reverse order.
- The efficiency of sealing against taconita will be given by the filling of grease between the protrusions of the labyrinth seal and outer ring (if any)

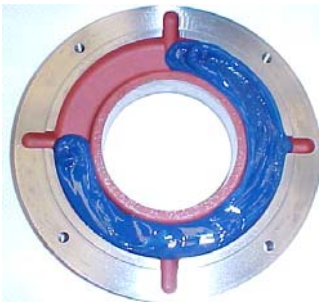

Figure 7.3: Outer bearing cap

ATTENTION

When the bearing is opened, inject the new grease through the grease nipple to expel the old grease found in the grease inlet tube, and apply the new grease in the rolling bearing, to the inner and outer rings, filling 3/4 of the empty spaces, as shown in Figure 7.3. In case of double bearings (ball bearing + roller bearing), also fill 3/4 of the empty spaces between the intermediate rings. Never clean the rolling bearing with cotton-based cloths, because they leave some lint, working as solid particles.

NOTE

WEG is not liable for the change of grease or for any damages arising from this change.

7.9.2 Oil-lubricated rolling bearing

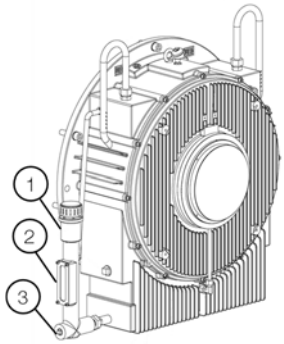

Figure 7.4: Oil-lubricated rolling bearing

Figure 7.4 legend:
1. *Oil inlet*
2. *Oil sight glass*
3. *Oil outlet*

7.9.2.1 Lubrication instructions

Oil drainage: When it is necessary to change the bearing oil, remove the oil outlet plug (3) and drain the oil completely.

To fill the bearing with oil:

- Close the oil outlet with the plug (3);
- Remove the oil inlet plug (1);
- Fill it with the specified oil up to the level indicated in the oil sight glass.

NOTES

1. All threaded holes that are not used must be closed with plugs and no fitting may present leaks;
2. The oil level is reached when the lubricant can be seen approximately in the middle of the sight glass;
3. The use of excessive amount of oil will not damage the bearing; but it can cause leaks through the shaft seals;
4. Never use hydraulic oil or mix it with the bearing lubricant oil.

7.9.2.2 Oil type

The type and quantity of the **lubricant oil** to be used are specified on the nameplate affixed to the generator.

7.9.2.3 Oil change

The bearing oil change must be done according to the intervals, which depend on the bearing operating temperatures, shown in Table 7.3:

Table 7.3: Oil change intervals

Bearing operating temperature	Bearing oil change intervals
Below 75 ºC	20,000 hours
Between 75 and 80 ºC	16,000 hours
Between 80 and 85 ºC	12,000 hours
Between 85 and 90 ºC	8,000 hours
Between 90 and 95 ºC	6,000 hours
Between 95 and 100 ºC	4,000 hours

The lifespan of the bearings depends on their operating conditions, on the generator operating conditions and on the maintenance procedures.
Proceed according to the following directions:
- The oil selected for the application must have the proper viscosity for the bearing operating temperature. The type of oil recommended by WEG already considers these criteria;
- Insufficient quantity of oil may damage the bearing;
- The minimum recommended oil level is reached when the lubricant can be seen in the lower part of the oil sight glass with the generator stopped.

ATTENTION

The oil level must be inspected daily and must remain in the middle of the oil sight glass.

7.9.2.4 Bearing operation

The system start, as well as the first hours of operation, must be monitored carefully.
Before starting, check:
- If the oil used complies with the specification on the nameplate;
- The lubricant characteristics;
- The oil level;
- The alarm and trip temperatures set for the bearing.

During the first start, it is necessary to stay alert for unusual vibrations or noises. If the bearing does not operate in a silently and smooth way, the generator must be shut down immediately.
The generator must operate for some hours until the bearing temperatures stabilize. In case of overheating of the bearings, the generator must be shut down for inspection of the bearings and temperature sensors.
Check if there is no oil leak through the plugs, gaskets or shaft end.

7.9.2.5 Bearing disassembly

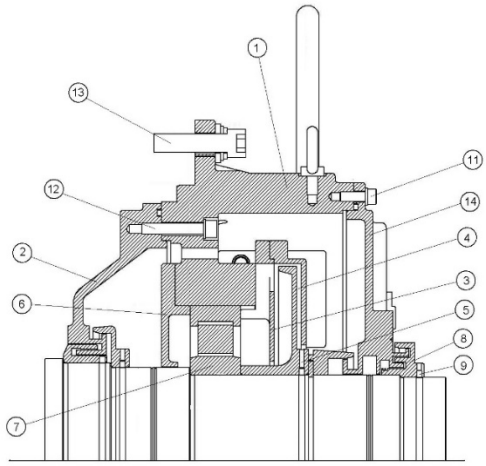

Figure 7.5: Parts of the oil-lubricated rolling bearing

Figure 7.5 legend:
1. *Outer oil tank*
2. *Inner oil tank*
3. *Outer bearing cap*
4. *Oil flinger*
5. *Screw*
6. *Inner bearing cap*
7. *Rolling bearing*
8. *Labyrinth taconite seal*
9. *Screw*
10. *Breather*
11. *Outer tank fastening screw*
12. *Inner tank fastening screw*
13. *End shield fastening screw*
14. *Bearing protection cover*

Before disassembling:
- Clean the whole bearing externally;
- Remove the oil completely from the bearing;
- Remove the temperature sensor from the bearing;
- Remove the grounding brush (if any);
- Provide a support for the shaft in order to hold the rotor during the disassembly.

Disassembly:
In order to disassemble the bearing, proceed according to the following guidelines:
1. Remove the screw (9) that fastens the labyrinth taconite seal (8);
2. Remove the labyrinth taconite seal (8);
3. Remove the screws (11) that fasten the bearing protection cover (14);
4. Remove the protection cover (14);
5. Remove the screws (5) that fasten the oil flinger (4) and remove it;
6. Remove the bolts that fix the external bearing cap (3) and remove it;
7. Remove the screws (12 and 13);
8. Remove the outer oil tank (1);
9. Remove the rolling bearing (7);
10. If complete disassembly of the bearing is necessary, remove the inner bearing cap (6) and the inner oil tank (2).

ATTENTION
- During the bearing disassembly, it is necessary to be careful not to damage the balls, rollers or shaft surface;
- Keep the disassembled parts in a safe and clean place.

7.9.2.6 Bearing assembly

- Clean the rolling bearing and the oil tanks thoroughly, and inspect all the parts before the bearing assembly.
- Make sure the rolling bearing contact surfaces are smooth and free of signs of scratches or corrosion;
- Before inserting the rolling bearing onto the shaft, heat it up to a temperature between 50 to 100 ºC;
- For the complete assembly of the bearing, follow the disassembly instructions in the reverse order.

ATTENTION

During the bearing assembly, apply sealant (e.g. Curil T) in order to seal the surfaces of the oil tank.

7.9.3 Sleeve bearings

7.9.3.1 Bearing data

The characteristic data, such as oil flow, quantity and type, are indicated on the bearing nameplate and must be strictly observed; otherwise, overheating and damages to the bearings may occur.
The hydraulic installation (for bearings with forced lubrication) and oil the supply for the generator bearings are responsibilities of the user.

7.9.3.2 Bearing installation and operation

For information on the bill of materials, assembly and disassembly instructions, and maintenance details, refer to the specific installation and operation manual of the bearings.

7.9.3.3 Cooling by water circulation

The sleeve bearings with cooling by water circulation have a serpentine inside the oil tank through which the water circulates.
In order to assure an efficient bearing cooling, the circulating water must have at the bearing inlet a temperature below or equal to the ambient, so that the cooling takes place.
The water pressure must be 0.1 bar and the flow equal to 0.7 l/s. The pH must be neutral.

NOTE

Under no circumstances can water leak into the oil tank, because this will contaminate the lubricant.

7.9.3.4 Oil change

Self-lubricated bearings:
The bearing oil change must be done according to the intervals, which depend on the bearing operating temperatures, shown in Table 7.4:

Table 7.4: Oil change intervals

Bearing operating temperature	Bearing oil change intervals
Below 75 ºC	20,000 hours
Between 75 and 80 ºC	16,000 hours
Between 80 and 85 ºC	12,000 hours
Between 85 and 90 ºC	8,000 hours
Between 90 and 95 ºC	6,000 hours
Between 95 and 100 ºC	4,000 hours

Bearings with (external) oil circulation:
The oil of the bearings must be changed every 20,000 hours of operation or whenever the lubricant presents modifications in its characteristics. The oil viscosity and pH must be checked regularly.

NOTE

The oil level must be inspected daily, and it must remain in the middle of the oil sight glass.

The bearings must be lubricated with the specified oil, observing the flow rate informed on their nameplate;
All threaded holes that are not used must be closed with plugs and no fitting may present leaks.
The oil level is reached when the lubricant can be seen approximately in the middle of the sight glass. The use of a larger amount of oil will not damage the bearing; but it can cause leaks through the shaft seals.

ATTENTION

The care with the lubrication will determine the useful life of the bearings and the safety in the generator operation. Therefore, the following recommendations must be observed:

- The selected ***lubricant oil*** must be the one with proper viscosity for the operating temperature of the bearings. That must be observed at every oil change or periodical maintenances;
- Never use or mix hydraulic oil with the lubricant oil of the bearings;
- Lack of lubricant, due to incomplete filling or non-monitoring of the level, can damage the bearing shells;
- The minimum oil level is reached when the lubricant can be seen in the lower part of the sight glass with the generator stopped.

7.9.3.5 Sealings

Make visual inspection of the sealings, making sure that the dragging marks of the seals on the shaft do not compromise its integrity and checking for cracks and broken parts. Cracked or broken parts must be replaced.
In case of bearing maintenance, in order to assemble the seal, it is necessary to carefully clean the seal contact surfaces and its enclosure, and cover the sealing with a non-hardening component (e.g.: Curil T). The two halves of the labyrinth taconite seal must be joined by a garter spring.
The drain holes located in the lower half of the seal must be cleaned and unobstructed.
Improper installation can damage the sealing and cause oil leakage.

ATTENTION

For further information on the disassembly and assembly of sleeve bearing seals, refer to the specific manual of this equipment.

7.9.3.6 Sleeve bearing operation

The system start, as well as the first hours of operation, must be monitored carefully.
Before starting, check:
- If the oil inlet and outlet tubes (if any) are clean. Clean the tubes by pickling, if necessary;
- If the used oil complies with the specification on the nameplate;
- The lubricant characteristics;
- The oil level;
- The alarm and trip temperatures set for the bearing.

During the first start, it is necessary to stay alert for unusual vibrations or noises. If the bearing is not running silently and smoothly, the generator must be shut down immediately.
The generator must operate for several hours until the bearing temperatures stabilize. In case of overheating of the bearings, the generator must be shut down for inspection of the bearings and temperature sensors.
Check if there is no oil leak through the plugs, gaskets or shaft end.

7.9.3.7 Sleeve bearing maintenance

The sleeve bearing maintenance includes:
- Periodic checking of the oil level and its lubricating conditions;
- Checking the bearing noise and vibration levels;
- Monitoring of the operating temperatures and retightening of the fastening and assembly screws;
- In order to facilitate the heat exchange with the environment, the frame must be kept clean, without external oil or dust accumulation;
- The NDE bearing is electrically insulated. The spherical seat surfaces of the bearing shell on the frame are covered with insulating material. Never remove this cover;
- The anti-rotation pin is also insulated, and the seals are made of non-conducting material;

Temperature control devices that are in contact with the bearing shell must also be properly insulated.

7.9.4 Protection setting

ATTENTION

The following temperatures must be set on the bearing protection system:
ALARM: 110 ºC
TRIP: 120 ºC
The alarm temperature must be set for 10 ºC above the operating temperature, not exceeding the limit of 110 ºC.

7.9.5 Disassembly/assembly of the bearing temperature sensors

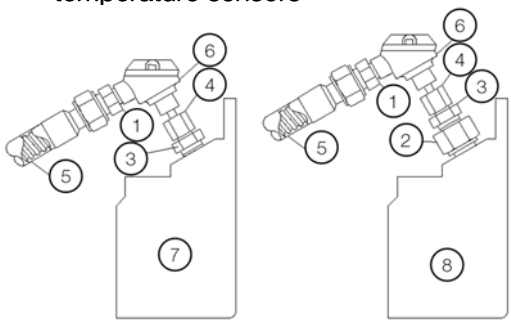

Figure 7.6: Pt100 on the bearings

Figure 7.6 legend:
1. *Reduction nipple*
2. *Insulating adapter*
3. *Locknut*
4. *Bulb*
5. *Flexible metal tube*
6. *Pt-100 temperature sensor*
7. *Non-insulated bearing*
8. *Insulated bearing*

Disassembly instructions:
If it is necessary to remove the Pt100 for bearing maintenance, proceed according to the following instructions:
- Remove the Pt100 carefully, locking the locknut (3) and unscrewing just the Pt100 from the bulb (4);
- Parts (2) and (3) must not be disassembled.

Assembly instructions:

ATTENTION

Before assembling the Pt100 on the bearing, check if it does not contain marks of knock or any other damage that may compromise its operation.

- Insert the Pt100 into the bearing;
- Restrain the locknut (3) with a wrench;
- Screw the bulb (4), adjusting it so that the tip of the Pt100 touches the contact surface of the bearing.

NOTES
- The assembly of the Pt100 on non-insulated bearings must be done directly on the bearing, without the insulating adapter (2);
- The tightening torque to assemble the Pt100 and the adapters must not exceed 10 Nm.

8 GENERATOR DISASSEMBLY AND ASSEMBLY

ATTENTION

All the repair, disassembly and assembly services must be performed only by properly qualified and trained professionals; otherwise, equipment damage and personal injury may occur. If any further explanations are necessary, consult WEG.
The disassembly and assembly sequence depend on the generator model.
Always use proper tools and devices. Any damaged part (cracks, dents on machined parts, faulty threads) must be replaced, avoiding restorations.

8.1 DISASSEMBLY

The following precautions must be taken when disassembling the electric generator:

1. Always use proper tools and devices to disassemble the generator;
2. Disconnect the generator electrical connections and those of the accessories;
3. Remove the heat exchanger and the noise suppressor (if any);
4. Remove the bearing temperature sensors and the grounding brush;
5. In order to prevent damages to the rotor and coil heads, support the shaft on both drive and non-drive ends;
6. In order to disassemble the bearings, follow the procedures described in this manual;
7. The removal of the rotor from the generator must be done with a suitable device and with extreme care so that the rotor does not drag on the stator laminated core or coil heads, thus preventing damages.

8.2 ASSEMBLY

To assemble the generator, follow the disassembly procedure in the reverse order.

NOTE

When the generator is supplied disassembled, an assembly manual is provided with it, describing the procedures for assembly on site.

Always use proper tools and devices to assemble the generator;

Any damaged part (cracks, dents on machined parts, faulty threads) must be replaced, always avoiding restorations.

8.3 TIGHTENING TORQUE

Table 8.21 and Table 8.2 shows the tightening torques of the screws recommended for assembling the generator.

Table 8.1: Screw tightening torque for metal/metal parts

Material / Resistance class		**Carbon Steel / 8.8 or above**		**Stainless steel / A2 – 70 or above**	
% Yield Strength		60%		70%	
Lubricant		Dry	Molycote 1000	Dry	Molycote 1000
Dia m	Pitch (mm)	Screws tightening torque (Nm)			
M3	0,5	1,2	0,8	1	0,69
M4	0,7	2,7	1,8	2,4	1,6
M5	0,8	5,4	3,6	4,8	3,2
M6	1	9,3	6,3	8,2	5,5
M8	1,25	22,4	15	20	13
M10	1,5	44	30	39	26
M12	1,75	77	52	67	45
M14	2	123	82	107	72
M16	2	188	126	165	110
M18	2,5	263	176	230	154
M20	2,5	368	246	322	215
M22	2,5	500	332	437	290
M24	3	637	425	557	372
M27	3	926	615	810	538
M30	3,5	1260	838	1102	734
M33	3,5	1704	1130	1490	990
M36	4	2195	1459	1920	1277
M42	4,5	3507	2328	3070	2037
M48	5	5258	3488	4600	3052

Table 8.2: Screw tightening torque for metal/isolated parts

Material / Resistance class		**Carbon Steel / 8.8 or above**		**Stainless steel / A2 – 70 or above**	
% Yield Strength		33%		33%	
Lubricant		Dry	Molycote 1000	Dry	Molycote 1000
Diam	Pitch (mm)	Screws tightening torque (Nm)			
M3	0,5	0,6	0,5	0,48	0,32
M4	0,7	1,5	1	1,1	0,76
M5	0,8	3	2	2,2	1,5
M6	1	5,2	3,4	3,8	2,6
M8	1,25	12,3	8,3	9,2	6,2
M10	1,5	24	16	18,2	12,2
M12	1,75	42	28	32	21
M14	2	68	45	51	34
M16	2	104	69	78	52
M18	2,5	145	98	108	72
M20	2,5	202	135	152	101
M22	2,5	274	183	206	137
M24	3	350	233	263	175
M27	3	510	338	382	254
M30	3,5	693	461	520	346
M33	3,5	937	622	703	466
M36	4	1207	802	905	602
M42	4,5	1929	1280	1447	960
M48	5	2892	1918	2170	1440

NOTE

The resistance class is normally indicated on the head of hex bolts.

ATTENTION

The assembly of the flywheel, if any, must be done according to the generator assembly manual. If further information is necessary, consult WEG.

8.4 AIR GAP MEASURMENT

After disassembling and assembling the motor, it is necessary to measure the air gap in order to check the concentricity between rotor and stator.
Measure the air gap between the metal support of the shaft seal the motors, measure shaft at four shaft equidistant points (45°, 135°, 225° and 315°).
The difference between the air gap measurements at two diametrically opposed points should be less than 10% of the average air gap.

ATENÇÃO

The bearing can only be closed after completion and projected from the air gap

For the single bearing:

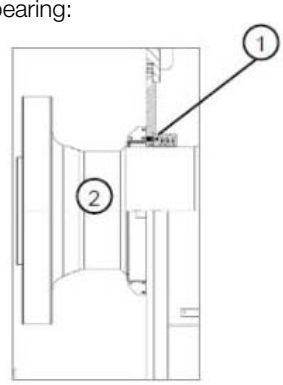

Figure 8.1: DE shaft seal

Legend of Figure 8.1:
1. DE shaft seal
2. Motor shaft

8.5 SPARE PARTS

WEG recommends keeping in stock the following spare parts:
- DE and NDE rolling bearings;
- Bearing shell for DE bearing and NDE bearings (sleeve bearings);
- Labyrinth taconite seal for DE bearing and NDE bearings (sleeve bearings);
- Temperature sensor for DE and NDE bearings;
- Space heater;
- Filter felts (if any);
- Rectifier set;
- Varistor set;
- Lubricant for the bearings;
- Brake pads (if any);
- Shaft grounding brush (if any);

The spare parts must be stored in clean, dry, well ventilated environments and, if possible, at constant temperature.

9 MAINTENANCE PLAN

The maintenance plan described in Table 9.1 is only referential, and the intervals between each maintenance intervention may vary according to the generator location and operating conditions.
For associated equipment, such as the water supply unit or control and protection system, it is necessary to refer to their specific manuals.

Table 9.1: Maintenance plan

EQUIPMENT	Weekly	Monthly	3 months	6 months	Annual	3 years	Notes
STATOR							
Visual inspection of the stator.					x		
Cleanliness control.					x		
Inspection of the slot wedges.						x	
Check of the fastening of the stator terminals.					x		
Measurement of the winding insulation resistance.					x		
ROTOR							
Visual inspection.					x		
Cleanliness control.						x	
Inspection of the shaft (wear, incrustations).						x	
EXCITER							
Cleanliness control.				x			
Diode and varistor tests.					x		
Winding inspection.					x		
BEARINGS							
Control of noise, vibration, oil flow, leaks and temperature.	x						
Lubricant quality control.					x		
Inspection of the bearing shell and shaft journal (sleeve bearing).						x	
Lubricant change.							According to interval indicated on the bearing nameplate.
TERMINAL BOXES AND GROUNDING TERMINALS							
Internal cleaning of the terminal boxes.					x		
Retightening of the screws.					x		
PROTECTION AND CONTROL EQUIPMENT							
Operation test.					x		
Recording of the values.	x						
Disassembly and operation test.						x	
COUPLING							
Inspection of the alignment.					x		Check after the first week of operation.
Inspection of the coupling fastening.					x		
WHOLE GENERATOR							
Inspection of noise and vibration.	x						
Drainage of condensed water.			x				
Retightening of the screws.					x		
Cleaning of the terminal boxes.					x		
Retightening of electrical and grounding connections.					x		
BRAKE							
Verification of pads wearing.							According to the equipment manual.
Operating control.							

10 ABNORMALITIES, CAUSES AND SOLUTIONS

NOTE

The instructions of Table 10.1 present only a basic list of abnormalities, causes and corrective actions. In case of questions, consult WEG.

Table 10.1: Basic list of abnormalities, causes and corrective actions

ABNORMALITY	POSSIBLE CAUSES	CORRECTION
The generator will not excite or build up voltage.	▪ Tripped protection	▪ Verify the signalization of a tripped protection in the main panel and in the regulator modules
	▪ Excitation switch, if it exists, is not working	▪ Verify the excitation switch
	▪ Interruption in the power supply circuit of the voltage regulator	▪ Check the power supply circuit of the voltage regulator
	▪ Driving speed is not correct	▪ Measure the generator speed and adjust it if necessary
		▪ Check if the underfrequency protection has tripped
	▪ Interruption in the main excitation circuit	▪ Measure all the rotating diodes; change defective diodes or all the set
		▪ Check connection between main rotor and diode set
	▪ Defective relay or other component of the regulator	▪ Change to manual mode
		▪ Replace the voltage regulator
	▪ Voltage reference parameterized at a low value	▪ Readjust the parameterization
	▪ Defective diode protection varistor	▪ If defective, replace it or, if there are no replacement parts, remove it temporarily
Generator will not excite up to the rated voltage	▪ Defective rotating rectifiers	▪ Measure individually all the rotating diodes; replace defective diodes; if necessary, replace the entire set
	▪ Speed below the value adjusted for the U/F function of the voltage regulator	▪ Check if the function U/F of the voltage regulator is actuating
		▪ If the U/F function is parameterized above the rated frequency, readjust it to -5% below
		▪ Measure speed and adjust it
	▪ Voltage reference parameterized at a low value	▪ Readjust the voltage reference parameterization.
	▪ Voltage remote adjustment below the rated value	▪ Readjust the correct value in the remote push-buttons
	▪ Power supply of the voltage regulator below the desired value, resulting in an output voltage lower than the necessary	▪ Check if the connections are according to the voltage regulator manual
Without load, the generator excites up to the rated voltage, but it collapses with load	▪ Rotating diodes are defective	▪ Measure individually all the rotating diodes; replace defective diodes; if necessary, replace the entire set
	▪ Protection tripp: overcurrent, over-excitation, overvoltage	▪ Check if the parameters are not adjusted to trip in normal operation conditions
	▪ Exciting current limit function actuation	▪ Verify the values adjusted for the actuation of the protections and also the parameterization
	▪ Steep drop in speed with or without the actuation of the U/F function	▪ Check the turbine speed control
		▪ Check parameterization of the U/f function

ABNORMALITY	POSSIBLE CAUSES	CORRECTION
Without load the generator excites through overvoltage	▪ For momentary overvoltage with immediate shutdown: opening of the signal transformer circuit	▪ Check the fuses and the connection cables
	▪ In remote mode: Error in the adjustment through remote push-buttons, with shutdown after a certain delay (adjusted also in the parameterization)	▪ Readjust the reference voltage value
	▪ In manual mode: Error in the parameterization of the reference voltage. There will not be actuation of the protection	▪ Readjust the reference voltage value
	▪ In local mode: Error in the parameterization of the reference voltage with shutdown after a certain delay (also adjusted in the parameterization)	▪ Readjust the reference voltage value
Oscillations in the generator voltage	▪ Manual mode: Stability not adjusted properly	▪ Adjust the voltage regulator parameterization
	▪ Automatic mode: Stability not adjusted properly	▪ Adjust the voltage regulator parameterization
	▪ Load oscillation	▪ Check the cause of the oscillations
	▪ Oscillations in the turbine speed	▪ Check the turbine speed control

11 DECLARATION OF CONFORMITY

EU Declaration of Conformity

Manufacturers:
WEG Equipamentos Elétricos S.A.
Av. Prefeito Waldemar Grubba, 3000
89256-900 - Jaraguá do Sul – SC – Brazil
www.weg.net

WEG Industrie (India) PVT. LTD.
Plot n° E-20 (North), SIPCOT Industrial Complex
Phase II – Expansion II.
Mornapalli Village, Hosur 635 109
Tamil Nadu - India
www.weg.net/in

WEG MEXICO, S.A. DE C.V
Carretera Jorobas - Tula Km 3.5, Manzana 5,
Lote 1, Fraccionamiento Parque Industrial Huehuetoca,
Municipio de Huehuetoca, C.P. 54680,
CD. de Mexico y Área Metropolitana – Mexico
www.weg.net/mx

WEG (Jiangsu) Electric Equipment CO., LTD.
No. 15 Group, North City Street, Dengyuan Community
Rugao City, Jiangsu Province – China
www.weg.net/cn

WEG (Nantong) Electric Motor Manufacturing CO., LTD.
No. 128# - Xinkai South Road, Nantong
Economic & Technical Development
Zone, Nantong, Jiangsu Province – China
www.weg.net/cn

WEGeuro – Industria Electrica S.A.
Rua Eng Frederico Ulrich, Apartado 6074
4476-908 – Maia – Porto – Portugal
www.weg.net/pt
Contact person: Luís Filipe Oliveira Silva Castro Araújo
Authorised Representative in the European Union
(Single Contact Point)

The manufacturer declares under sole responsibility that:

WEG synchronous and asynchronous motors, generators and their components used for following lines:

M..., W60, WGM, G... and S...

.....

when installed, maintained and used in applications for which they were designed, and in compliance with the relevant installation standards and manufacturer's instructions, comply with the provisions of the following relevant European Union harmonisation legislation, wherever applicable:

Low Voltage Directive 2006/95/EC* (valid until April 19th, 2016)
Low Voltage Directive 2014/35/EU* (valid from April 20th, 2016)
Machinery Directive 2006/42/EC**
EMC Directive 2014/30/EU (electric motors are considered inherently benign in terms of electromagnetic compatibility)

The fulfilment of the safety objectives of the relevant European Union harmonisation legislation has been demonstrated by compliance with the following standards, wherever applicable:

EN 60034-1:2010 + AC:2010/ EN 60034-5:2001 + A1:2007/ EN 60034-6:1993/
EN 60034-7:1993 + A1:2001/ EN 60034-8:2007 + A1: 2014/ EN 60034-9:2005 + A1:2007/ EN 60034-11:2004/
EN 60034-12:2002 + A1:2007/ EN 60034-14:2004 + A1:2007/
EN 60204-1:2006 + A1:2009 + AC:2010 and EN 60204-11:2000 + AC:2010

CE marking in: **1998**

* Electric motors designed for use with a voltage rating higher than 1000V are not considered under the scope.
** Low voltage electric motors are not considered under the scope and electric motors designed for use with a voltage rating higher than 1000V are considered partly completed machinery and are supplied with a

Declaration of Incorporation:

The products above cannot be put into service until the machinery into which they have been incorporated has been declared in conformity with the Machinery Directive.

A Technical Documentation for the products above is compiled in accordance with part B of annex VII of Machinery Directive 2006/42/EC.

We undertake to transmit, in response to a reasoned request by the national authorities, relevant information on the partly completed machinery identified above through WEG authorised representative established in the European Union. The method of transmission shall be electronic or physical method and shall be without prejudice to the intellectual property rights of the manufacturer.

Signed for and on behalf of the manufacturer:
Eduardo de Nobrega
Managing Director

Jaraguá do Sul, May 28th, 2016

DEC2816-Rev01 - English 1/1

12 ENVIRONMENTAL INFORMATION

12.1 PACKAGE

Electric generators are supplied in cardboard, polymer, wood or metallic material packages. These materials are recyclable or reusable and must be properly disposed according to the current regulations of each country. All the wood used in the packaging of WEG generators comes from reforestation and receives anti-fungal treatment.

12.2 PRODUCT

Electric generators, under the constructive aspect, are manufactured mainly with ferrous metals (steel, cast iron), nonferrous metals (copper, aluminum) and plastic.
The electric generator, in general, is a product that has a long useful life; however, when it must be disposed, WEG recommends that the materials of the packaging and of the product be properly separated and sent for recycling. The non-recyclable materials must be properly disposed according to the environmental regulations, i.e., in industrial landfill, co-processed in cement kilns or incinerated. The service providers for recycling, disposal in industrial landfills, co-processing or incineration of waste must be properly licensed by the environmental agency of each state to carry out these activities.

12.3 HAZARDOUS WASTE

Grease and oil waste used to lubricate the bearings should be disposed, according to the instructions of the relevant environmental agencies, because its improper disposal can cause impacts to the environment.

13 SERVICE NETWORK

To consult the Service Network, access the website www.weg.net.

.

14 WARRANTY TERM

These products, when operated under the conditions stipulated by WEG in the operating manual for such product, are warranted against defects in workmanship and materials for twelve (12) months from start-up date or eighteen (18) months from manufacturer shipment date, whichever occurs first.
However, this warranty does not apply to any product which has been subject to misuse, misapplication, neglect (including without limitation, inadequate maintenance, accident, improper installation, modification, adjustment, repair or any other cases originated from inadequate applications).
The company will neither be responsible for any expenses incurred in installation, removal from service, consequential expenses such as financial losses nor transportation costs as well as tickets and accommodation expenses of a technician when this is requested by the customer.
The repair and/or replacement of parts or components, when effected by WEG within the Warranty period do not give Warranty extension, unless otherwise expressed in writing by WEG.
This constitutes WEG's only warranty in connection with this sale and is in lieu of all other warranties, expressed or implied, written or oral.
There are no implied warranties of merchantability or fitness for a particular purpose that apply to this sale.
No employee, agent, dealer, repair shop or other person is authorized to give any warranties on behalf of WEG nor to assume for WEG any other liability in connection with any of its products.
In case this happens without WEG's authorization, Warranty is automatically cancelled.

LIABILITY

Except as specified in the foregoing paragraph entitled "Warranty Terms for Engineering Products", the company shall have no obligation or liability whatsoever to the purchaser, including, without limitation, any claims for consequential damages or labor costs, by reason of any breach of the express warranty described therein.
The purchaser further hereby agrees to indemnify and hold the company harmless from any causes of action (other than cost of replacing or repairing the defective product as specified in the foregoing paragraph entitled "Warranty Terms for Engineering Products"), arising directly or indirectly from the acts, omissions or negligence of the purchaser in connection with or arising out of the testing, use, operation, replacement or repair of any product described in this quotation and sold or furnished by the company to the purchaser.

WEG Equipamentos Elétricos S.A.
International Division
Av. Prefeito Waldemar Grubba, 3000
89256-900 - Jaraguá do Sul - SC - Brazil
Phone: 55 (47) 3276-4002
Fax: 55 (47) 3276-4060
www.weg.net

ARGENTINA
WEG EQUIPAMIENTOS ELECTRICOS S.A.
Sgo. Pampiglione 4849
Parque Industrial San Francisco
2400 - San Francisco
Phone: +54 (3564) 421484
www.weg.net/ar

AUSTRALIA
WEG AUSTRALIA PTY. LTD.
14 Lakeview Drive, Scoresby 3179,
Victoria
Phone: +03 9765 4600
www.weg.net/au

AUSTRIA
WATT DRIVE ANTRIEBSTECHNIK GMBH *
Wöllersdorfer Straße 68
2753, Markt Piesting
Phone: + 43 2633 4040
www.wattdrive.com

LENZE ANTRIEBSTECHNIK GES.M.B.H *
Ipf - Landesstrasse 1
A-4481 Asten
Phone: +43 (0) 7224 / 210-0
www.lenze.at

BELGIUM
WEG BENELUX S.A.*
Rue de l'Industrie 30 D,
1400 Nivelles
Phone: +32 67 888420
www.weg.net/be

BRAZIL
WEG EQUIPAMENTOS ELÉTRICOS S.A.
Av. Pref. Waldemar Grubba, 3000,
CEP 89256-900 Jaraguá do Sul – SC
Phone: +55 47 3276-4000
www.weg.net/br

CHILE
WEG CHILE S.A.
Los Canteros 8600,
La Reina - Santiago
Phone: +56 2 2784 8900
www.weg.net/cl

CHINA
WEG (NANTONG) ELECTRIC MOTOR MANUFACTURING CO. LTD.
No. 128# - Xinkai South Road, Nantong
Economic & Technical Development Zone,
Nantong, Jiangsu Province
Phone: +86 513 8598 9333
www.weg.net/cn

COLOMBIA
WEG COLOMBIA LTDA
Calle 46A N82 – 54
Portería II - Bodega 6 y 7
San Cayetano II - Bogotá
Phone: +57 1 416 0166
www.weg.net/co

DENMARK
WEG SCANDINAVIA DENMARK *
Sales Office of WEG Scandinavia AB
Verkstadgatan 9 - 434 22 Kumgsbacka,
Sweden
Phone: +46 300 73400
www.weg.net/se

FRANCE
WEG FRANCE SAS *
ZI de Chenes - Le Loup13 / 38297 Saint
Quentin Fallavier,
Rue du Mo¬rellon - BP 738/
Rhône Alpes, 38 > Isère
Phone: + 33 47499 1135
www.weg.net/fr

GREECE
MANGRINOX*
14, Grevenon ST.
GR 11855 - Athens, Greece
Phone: + 30 210 3423201-3
www.weg.net/gr

GERMANY
WEG GERMANY GmbH*
Industriegebiet Türnich 3 Geigerstraße 7
50169 Kerpen-Türnich
Phone: + 49 2237 92910
www.weg.net/de

GHANA
ZEST ELECTRIC MOTORS (PTY) LTD.
15, Third Close Street Airport Residential Area,
Accra
Phone: +233 3027 66490
www.zestghana.com.gh

HUNGARY
AGISYS AGITATORS & TRANSMISSIONS LTD.*
Tó str. 2. Torokbalint, H-2045 Phone: + 36 (23) 501 150
www.agisys.hu

INDIA
WEG ELECTRIC (INDIA) PVT. LTD.
Eshwari Arcade, No.250,14th Main, 7th Sector
HSR Layout, Bangalore-560102
M(+91)9686029786
Phone: (+91) 80 4643 7450
www.weg.net/in

ITALY
WEG ITALIA S.R.L.*
Via Viganò de Vizzi, 93/95
20092 Cinisello Balsamo, Milano Phone: + 39 2 6129 3535
www.weg.net/it

FERRARI S.R.L.*
Via Cremona 25 26015
Soresina (CR), Cremona
Phone: + 39 (374) 340-404
www.ferrarisrl.it

STIAVELLI IRIO S.P.A.*
Via Pantano - Blocco 16 - Capalle 50010 ,
Campi Bisenzio (FI)
Phone: + 39 (55) 898.448
www.stiavelli.com

JAPAN
WEG ELECTRIC MOTORS JAPAN CO., LTD.
Yokohama Sky Building 20F, 2-19-12
Takashima, Nishi-ku, Yokohama City,
Kanagawa, Japan 220-0011
Phone: + 81 45 5503030
www.weg.net/jp

MEXICO
WEG MEXICO, S.A. DE C.V.
Carretera Jorobas-Tula
Km. 3.5, Manzana 5, Lote 1 Fraccionamiento
Parque Industrial
Huehuetoca
Estado de México - C.P. 54680
Phone: +52 55 53214275
www.weg.net/mx

NETHERLANDS
WEG NETHERLANDS *
Sales Office of WEG Benelux S.A. Hanzepoort
23C, 7575 DB Oldenzaal
Phone: +31 541 571090
www.weg.net/nl

PORTUGAL
WEG EURO - INDÚSTRIA ELÉCTRICA, S.A.*
Rua Eng. Frederico Ulrich,
Sector V, 4470-605 Maia,
Apartado 6074, 4471-908 Maia, Porto
Phone: +351 229 477 700
www.weg.net/pt

RUSSIA
WEG ELECTRIC CIS LTD *
Russia, 194292, St. Petersburg, Pro¬spekt
Kultury 44, Office 419
Phone: +7 812 3632172
www.weg.net/ru

SOUTH AFRICA
ZEST ELECTRIC MOTORS (PTY) LTD.
47 Galaxy Avenue, Linbro Business
Park Gauteng Private Bag X10011
Sandton, 2146, Johannesburg
Phone: +27 11 7236000
www.zest.co.za

SPAIN
WEG IBERIA INDUSTRIAL S.L.*
C/ Tierra de Barros, 5-7
28823 Coslada, Madrid
Phone: +34 91 6553008
www.weg.net/es

SINGAPORE
WEG SINGAPORE PTE LTD
159, Kampong Ampat, #06-02A KA PLACE.
368328
Phone: +65 68581081
www.weg.net/sg

SWEDEN
WEG SCANDINAVIA AB *
Box 27, 435 21 Mölnlycke
Visit: Designvägen 5, 435 33
Mölnlycke, Göteborg
Phone: +46 31 888000
www.weg.net/se

SWITZERLAND
BIBUS AG *
Allmendstrasse 26, 8320 – Fehraltorf
Phone: + 41 44 877 58 11
www.bibus-holding.ch

UNITED ARAB EMIRATES
The Galleries, Block No. 3, 8th Floor,
Office No. 801 - Downtown Jebel Ali
262508, Dubai
Phone: +971 (4) 8130800
www.weg.net/ae

UNITED KINGDOM
WEG ELECTRIC MOTORS (U.K.) LTD.*
Broad Ground Road - Lakeside Redditch,
Worcestershire B98 8YP
Phone: + 44 1527 513800
www.weg.net/uk

ERIKS *
Amber Way, B62 8WG Halesowen
West Midlands
Phone: + 44 (0)121 508 6000

BRAMMER GROUP *
PLC43-45 Broad St, Teddington
TW11 8QZ
Phone: + 44 20 8614 1040

USA
WEG ELECTRIC CORP.
6655 Sugarloaf Parkway, Duluth, GA 30097
Phone: +1 678 2492000
www.weg.net/us

VENEZUELA
WEG INDUSTRIAS VENEZUELA C.A.
Centro corporativo La Viña Plaza,
Cruce de la Avenida Carabobo con la calle
Uzlar de la Urbanización La Viña / Jurisdicción
de la Parroquia San José - Valencia
Oficinas 06-16 y 6-17, de la planta tipo 2, Nivel
5, Carabobo
Phone: (58) 241 8210582
www.weg.net/ve

* European Union Importers