W21

Aluminium Multimounting Three-phase Electric Motors Latin American Market

Motors | Automation | Energy | Transmission & Distribution | Coatings

www.weg.net

Visual Index

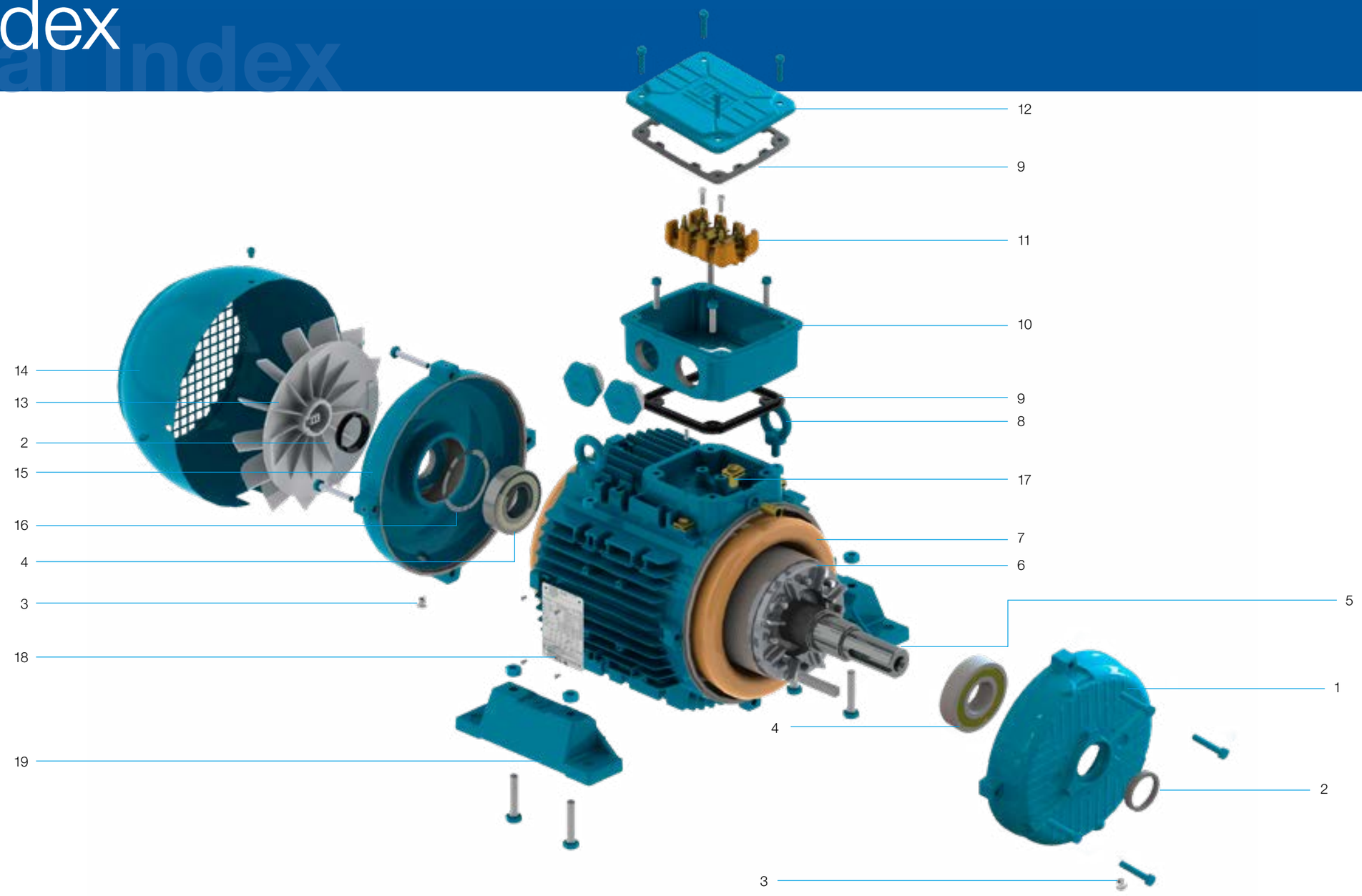

1 - Drive endshield
2 - Bearing seal (v'ring)
3 - Drain plug
4 - Bearings
5 - Shaft
6 - Squirrel cage rotor
7 - Wound stator
8 - Eye bolts
9 - Rubber gasket
10 - Terminal box
11 - Terminal block
12 - Terminal box cover
13 - Cooling Fan
14 - Fan cover
15 - Non-drive endshield
16 - Spring washer
17 - Grounding terminal
18- Nameplate
19 - Removable feet

W21 Aluminium Multimounting - Three-Phase Electric Motors

Looking for the optimum solution to satisfy a diversity of requirements and applications, WEG offers its W21 Aluminium Multimounting three phase motor platform. Recognised for their high quality, reliability and flexibility, these motors are utilised throughout the world in a variety of industrial applications.

Standard Features

- Rated output: 0,12 to 37 kW
- Number of poles: 2, 4, 6 and 8
- Frame sizes IEC 63 to 200M/L
- Efficiency levels IE2 or IE3
- Ambient Temperature Range: -20°C to +40°C
- Frequency: 50 Hz or 60 HZ
- Voltage at 50 Hz: 220/380 V (up to 100 L)
  380/660 V (from 112M and up);
- Voltage at 60 Hz: 220/440 V (up to 90S/L)
  220/380/440 V (from 100L and up);
- Insulation class F (DT 80 K)
- Design N
- Degree of protection: IP55
- Cooling method: IC411 according to DIN EN 60034-6
- Mounting: B3T
- Frame material: Die cast aluminium
- Endshields material: Aluminium (up to 132M)
  Cast iron (160M/L and up)
- Terminal box material: Aluminium
- Terminal block for motor connection
- Grounding: Simple grounding inside the terminal box
- Fan Material: Polypropylene
- Fan Cover Material: Steel
- Drain: Rubber drain plug
- V'ring seal on both endshields
- Shaft material: SAE 1040/45
- ZZ Ball bearings
- Eyebolts for frames 112M to 200M/L
- Painting Plan: WEG internal painting plans 207A semi-matt (frames 63 up to 132) and 203A semi-gloss (frames 160 up to 200), both meeting the 'C2' performance criteria defined in the DIN EN ISO 12944-2 standard
- Thermal Protection: Thermistors PTC (155 °C) in windings for frames 160 up to 200

**For further information about frequency inverter operation, please contact WEG.*

Optional Features

- Number of poles: 10, 12 or multispeed motors
- Non standard voltages
- Insulation Class H
- Thermal protections: Thermostats, Thermistors (PTC) or Thermoresistances (Pt-100) in windings
- Space Heaters
- Higher degrees of protection, up to IP66
- Forced ventilation, encoders or brakes
- Other mounting configurations, including foot/flange, flange, pad
- Accessories terminal box
- Cable glands
- Canopy for vertical shaft down applications
- Fan material: Conductive plastic, aluminium
- Shaft material: Stainless steel
- Double shaft end
- Painting plans for aggressive environments e.g. C5M / C5I acc. ISO 12944
- Internal anticorrosive epoxy painting

Features and Benefits

Reliability

WEG W21 Aluminium Motors are the result of high technological design, premium quality components and a wide application experience. Recognized for its quality, reliability and efficiency, the W21 Aluminium motor range incorporates the benefits of the W21 General Purpose cast iron line but with a lightweight construction and the with the flexibility offered by its multi-mounting mechanical design.

Flexible Construction

The W21 Aluminium motor line was developed in response to Market requirements regarding mounting flexibility. Consequently, and as its name suggests, the design incorporates a multimount feature which permits the motor to be mounted with the terminal box oriented
on the top or on either side. Additionally, the motor terminal box can be rotated in 90° increments, permitting connection of the incoming power cables in any position.
This unique system enables the mounting configuration to be easily changed with no machining or modification to the motor feet required.
Furthermore, the innovative design of the W21 Aluminium Multimounting line offers the additional advantage on standardization and stock flexibility, considering that a single motor may be utilised for all mounting possibilities whilst also offering full interchangeability with existing cast iron frame motors.

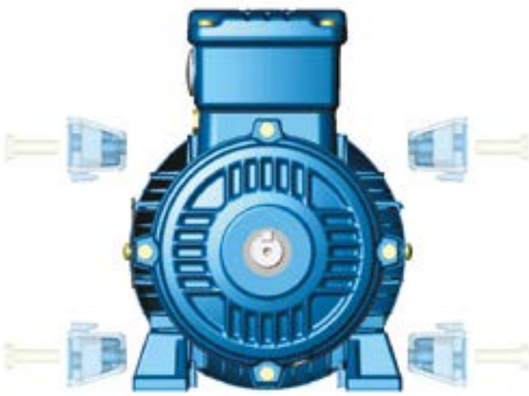

Definite Purpose Designs

Complimenting what is already a comprehensive range of industrial motors, the W21 aluminium multi-mounting line features, besides the standard version, several definite purpose derived designs, such as Brake Motors, Single Phase Motors, Marine Motors and TEAO (IC418) Motors for Fan & Exhaust applications.
These definite purpose designs are perfectly adapted to suit all application needs, and incorporate the same reliability, easy maintenance, reduced energy consumption and flexibility offered by the standard W21 Aluminium Multi-mounting line.

Construction Features

Frame			63	71	80	90S/L	100L	112M	132S	132M	S132S	160M/L	180M/L	200M/L
Mechanical features														
Mounting			B3T											
Frame Material			Aluminum											
Degree of Protection (IP rating)			IP55											
Grounding			Single Grounding											
Cooling Method (IC)			Totally enclosed fan cooled (IC411)											
Fan Material			Plastic											
Fan Cover Material			Steel plate											
Endshields Material			Aluminum									FC-200 Cast Iron		
Drain			Rubber drain plug											
Bearings	Shielded/Clearance (DE)		ZZ									ZZ-C3		
	Shielded/Clearance (NDE)		ZZ									ZZ-C3		
	Locking		fitted with spring washer in the NDE											
	Drive End		6201	6203	6204	6205	6206	6307	6308	6308	6308	6309	6311	6312
	Non drive end			6202	6203	6204	6205	6206	6207	6207	6207	6209	6211	6212
Bearing Seal			V'ring											
Joint Seal			None											
Lubrica-tion	Grease type		Mobil Polyrex EM											
	Grease fitting		Without grease fitting											
Terminal block			BMC - 6-pins											
Terminal box material			Die cast aluminium											
Cable entries	Main	Size	2 x M20 x 1.5			2 x M25 x 1.5		2 x M32 x 1.5				2 x M40 x 1.5		2 x M50 x 1.5
	Plug		Plasctic plug for transport and storage											
Shaft	Material		SAE 1040/45											
	DE Threaded hole	2P	M4	M5	M6	M8	M10		M12			M16		M20
		4 - 8P												
Vibration level			Grade A											
Key			Fitted with "A" type											
Nameplate material			Stainless steel AISI 304											
Balancing		2P	Without balance			With 1/2 key								
		4 - 12P	Without balance		With 1/2 key									
Painting	Type		207 A											203 A
	Performance Criteria		Corrosive category C2 according to DIN EN ISO 12944-2											
	Colour		MUNSELL N6.5 (RAL 5009 as optional)											
Electrical features														
Design			N											
Voltage / Frequen-cy	IE2 / IE3	50HZ	220/380 W/ 6 term					380/660 W/ 6 term						
		60HZ	220/440 W/ 9 term					220/380/440 W/ 12 term						
Winding	Impregnation		Dip and bake											
	Insulation class		F (DT 80K)											
Service factor			1.00											
Rotor			Aluminium die cast											
Thermal protection			Without thermal protection											

Optional Features

Frame	63	71	80	90S/L	100L	112M	132S	132M	S132S	160M/L	180M/L	200M/L
Mechanical optionals												
Terminal block												
BMC terminal block - twelve-pin	0	0	0	0	0	0	0	0	0	0	0	0
Cable glands												
Plastic cable gland	0	0	0	0	0	0	0	0	0	0	0	0
Brass cable gland	0	0	0	0	0	0	0	0	0	0	0	0
Stainless steel cable gland	0	0	0	0	0	0	0	0	0	0	0	0
Flange												
Flange FF (IEC) or D (NEMA)	0	0	0	0	0	0	0	0	0	0	0	0
Flange C-DIN (IEC)	0	0	0	0	0	0	0	0	0	NA	NA	NA
Flange C (NEMA)	0	0	0	0	0	0	0	0	0	0	0	0
DE sealing												
Nitrillic rubber lip seal	0	0	0	0	0	0	0	0	0	0	0	0
Nitrillic rubber oil seal	0	0	0	0	0	0	0	0	0	0	0	0
Viton seal	0	0	0	0	0	0	0	0	0	0	0	0
Viton seal with spring	0	0	0	0	0	0	0	0	0	0	0	0
Viton seal with stainless steel spring	0	0	0	0	0	0	0	0	0	0	0	0
NDE sealing												
V'RING	0	0	0	0	0	0	0	0	0	0	0	0
Nitrillic rubber lip seal	0	0	0	0	0	0	0	0	0	0	0	0
Nitrillic rubber oil seal	0	0	0	0	0	0	0	0	0	0	0	0
Viton seal	0	0	0	0	0	0	0	0	0	0	0	0
Viton seal with spring	0	0	0	0	0	0	0	0	0	0	0	0
Joint / Bolts sealing												
Loctite 5923 (permatex) (joints / bolts)	0	0	0	0	0	0	0	0	0	0	0	0
Degree of protection												
IP56	0	0	0	0	0	0	0	0	0	0	0	0
Insulation Class												
F DT 105K	0	0	0	0	0	0	0	0	0	0	0	0
H DT 80K	0	0	0	0	0	0	0	0	0	0	0	0
H DT 105K	0	0	0	0	0	0	0	0	0	0	0	0
H DT 125K	0	0	0	0	0	0	0	0	0	0	0	0
F DT B	0	0	0	0	0	0	0	0	0	0	0	0
F DT F	0	0	0	0	0	0	0	0	0	0	0	0
H DT B	0	0	0	0	0	0	0	0	0	0	0	0
H DT F	0	0	0	0	0	0	0	0	0	0	0	0
Terminal Box												
Cast Iron	0	0	0	0	0	0	0	0	0	0	0	0
Painting												
No Painting	0	0	0	0	0	0	0	0	0	ND	ND	ND
203A	0	0	0	0	0	0	0	0	0	P	P	P
Plug												
Plain Plastic plug	0	0	0	0	0	0	0	0	0	0	0	0
No plug	0	0	0	0	0	0	0	0	0	0	0	0
Direction of Rotation												
Clockwise	0	0	0	0	0	0	0	0	0	0	0	0
Counterclockwise	0	0	0	0	0	0	0	0	0	0	0	0
Nameplate with arrow indicating direction of rotation	0	0	0	0	0	0	0	0	0	0	0	0

Notes:
P = Standard; O = Optional; E = Special; NA = Not available

Optional Features

Frame	63	71	80	90S/L	100L	112M	132S	132M	S132S	160M/L	180M/L	200M/L
Drain												
Stainless stell threaded drain plug (closed)	0	0	0	0	0	0	0	0	0	0	0	0
Balance												
Normal balance without key (2 poles)	NA	NA	NA	0	0	0	0	0	0	0	0	0
Normal balance without key (4 poles and upper)	NA	NA	NA	0	0	0	0	0	0	0	0	0
Normal balance with full key	0	0	0	0	0	0	0	0	0	0	0	0
Key												
B Key	0	0	0	0	0	0	0	0	0	0	0	0
Nameplates												
Addicional Nameplate for inverter	0	0	0	0	0	0	0	0	0	0	0	0
Bolts Material												
Stainless steel bolts 304	0	0	0	0	0	0	0	0	0	0	0	0
Stainless steel bolts 316	0	0	0	0	0	0	0	0	0	0	0	0
Other mechanical optionals												
Drip cover (recommended for vertical shaft down applications)	0	0	0	0	0	0	0	0	0	0	0	0

Electrical optionals												
Thermal protection												
Thermostat - alarm / trip (NO or NC) - 130 °C	0	0	0	0	0	0	0	0	0	0	0	0
Thermostat - alarm / trip (NO or NC) - 155 °C	0	0	0	0	0	0	0	0	0	0	0	0
Pt-100 two wires, one per phase	0	0	0	0	0	0	0	0	0	0	0	0
Pt-100 three wires, one per phase	0	0	0	0	0	0	0	0	0	0	0	0
PTC Thermistor - alarm/trip (130 °C)	0	0	0	0	0	0	0	0	0	0	0	0
PTC Thermistor - alarm/trip (155 °C)	0	0	0	0	0	0	0	0	0	0	0	0
PTC Thermistor - trip (180 °C)	0	0	0	0	0	0	0	0	0	0	0	0
Space heaters												
110-127 V	0	0	0	0	0	0	0	0	0	0	0	0
200-240 V	0	0	0	0	0	0	0	0	0	0	0	0
110-127 / 220-240 V	ND	ND	ND	ND	ND	E	E	E	E	E	E	E
380-480 V	E	E	E	E	E	E	E	E	E	E	E	E
Service factor												
At 50Hz Service factor 1.15	0	0	0	0	0	0	0	0	0	0	0	0
At 60Hz Service factor 1.25	0	0	0	0	0	0	0	0	0	0	0	0

Notes:
P = Standard; O = Optional; E = Special; NA = Not available

IE1 - Standard Efficiency - 50 Hz [1) 2)]

Output		Frame	Full Load Torque (kgfm)	Locked Rotor Current Il/In	Locked Rotor Torque Tl/Tn	Break-down Torque Tb/Tn	Inertia J (kgm2)	Allowable locked rotor time (s)		Weight (kg)	Sound dB(A)	380 V							
												Rated speed (rpm)	% of full load						Full load current In (A)
													Efficiency			Power Factor			
kW	HP							Hot	Cold				50	75	100	50	75	100	
II Poles																			
0.12	0.16	63	0.041	6.5	4.5	5.0	0.0001	12	26	5.8	52	2870	50.0	53.5	53.5	0.46	0.56	0.65	0.524
0.18	0.25	63	0.063	5.0	2.4	2.4	0.0001	10	22	8.0	52	2790	52.0	57.0	59.0	0.54	0.67	0.77	0.602
0.25	0.33	63	0.089	4.5	2.3	2.4	0.0002	12	26	8.5	52	2745	52.0	57.0	60.0	0.57	0.72	0.81	0.781
0.37	0.5	71	0.129	5.0	2.5	3	0.0003	11	24	10.0	56	2790	61.2	66.0	67.6	0.60	0.75	0.85	0.978
0.55	0.75	71	0.194	5.0	2.5	2.8	0.0003	10	22	10.2	56	2755	64.0	68.5	69.0	0.66	0.81	0.87	1.39
0.75	1	80	0.260	5.0	2.4	2.4	0.0006	9	20	11.0	59	2805	66.0	72.0	72.5	0.50	0.65	0.76	2.06
1.1	1.5	80	0.384	5.8	2.1	2.5	0.0008	7	15	13.5	59	2790	73.0	75.0	75.5	0.61	0.76	0.84	2.63
1.5	2	90S/L	0.514	6.3	2.7	2.6	0.0017	7	15	17.2	64	2840	75.0	78.0	78.0	0.63	0.76	0.83	3.52
2.2	3	90S/L	0.763	6.8	2.8	2.9	0.0022	9	20	23.0	64	2810	77.0	78.0	80.0	0.63	0.77	0.85	4.83
3	4	100L	1.02	6.8	2	2.8	0.0052	9	20	25.5	67	2870	80.0	81.0	82.0	0.69	0.81	0.87	6.39
4	5.5	112M	1.36	6.8	2.4	3	0.0073	9	20	35.0	64	2875	81.0	83.0	83.1	0.71	0.82	0.87	8.22
5.5	7.5	S132S	1.82	6.5	2.1	3.1	0.0159	8	18	56.0	68	2940	81.0	84.0	84.7	0.64	0.76	0.82	12.0
7.5	10	S132S	2.49	6.8	2.2	3.2	0.0187	8	18	60.0	68	2935	84.3	86.0	86.0	0.62	0.75	0.82	16.2
9.2	12.5	132M	3.05	7.5	2.4	3.3	0.0243	8	18	68.0	68	2940	84.5	86.0	86.9	0.67	0.79	0.85	18.9
11	15	160M/L	3.64	7.7	2.6	3.1	0.0335	7	15	110	70	2940	85.5	87.5	87.6	0.68	0.79	0.85	22.4
15	20	160M/L	4.96	8.7	3	3.5	0.0452	7	15	115	70	2945	86.6	88.5	88.7	0.67	0.78	0.84	30.6
18.5	25	160M/L*	6.12	8.6	3	3.5	0.0559	6	13	120	70	2945	88.0	89.5	89.5	0.69	0.80	0.85	36.9
22	30	180M/L	7.24	8.5	2.6	3.2	0.0921	7	15	160	70	2960	89.5	90.5	90.5	0.71	0.81	0.85	43.5
30	40	200M/L	9.87	7.2	2.4	2.8	0.1958	8	18	215	74	2960	89.5	90.7	90.7	0.73	0.82	0.86	58.4
37	50	200M/L	12.2	7.7	2.6	2.8	0.2128	8	18	235	74	2965	90.0	91.0	91.5	0.71	0.80	0.86	71.5
High-Output Design																			
0.37	0.5	63	0.132	5.0	2.5	2.8	0.0002	8	18	9.8	52	2735	62.0	65.0	65.0	0.60	0.73	0.83	1.04
0.55	0.75	80	0.191	6.5	2.3	2.3	0.0007	20	44	13.0	59	2805	68.0	70.0	71.0	0.65	0.77	0.86	1.26
0.75	1	71	0.262	5.5	2.7	2.6	0.0005	8	18	11.0	56	2790	68.0	72.5	72.5	0.60	0.75	0.84	1.87
1.5	2	80	0.527	6.0	3	2.7	0.0009	10	22	15.0	59	2770	76.0	77.0	77.5	0.70	0.82	0.87	3.37
3	4	90S/L*	1.03	6.2	3.2	3.1	0.0025	6	13	24.0	64	2830	80.0	81.0	81.5	0.55	0.68	0.78	7.13
4	5.5	100L	1.35	7.5	1.7	2.6	0.0065	6	13	28.0	67	2885	82.0	83.1	83.1	0.65	0.78	0.85	8.60
5.5	7.5	112M	1.87	7.7	2.5	3	0.0096	10	22	45.0	64	2870	85.0	85.0	85.5	0.79	0.86	0.89	10.9
5.5	7.5	132M	1.82	6.5	2.1	3.1	0.0159	8	18	56.0	68	2940	81.0	84.0	84.7	0.64	0.76	0.82	12.0
5.5	7.5	132S	1.82	6.5	2.1	3.1	0.0159	8	18	56.0	68	2940	81.0	84.0	84.7	0.64	0.76	0.82	12.0
7.5	10	112M*	2.55	7.6	3	3	0.0094	6	13	45.0	64	2870	85.5	86.0	86.5	0.59	0.72	0.81	16.1
7.5	10	132M	2.49	6.8	2.2	3.2	0.0187	8	18	60.0	68	2935	84.3	86.0	86.0	0.62	0.75	0.82	16.2
7.5	10	132S	2.49	6.8	2.2	3.2	0.0187	8	18	60.0	68	2935	84.3	86.0	86.0	0.62	0.75	0.82	16.2
9.2	12.5	160M/L	3.05	7.6	2.5	3	0.0339	7	15	85.0	70	2940	83.6	86.5	86.9	0.69	0.80	0.85	18.9
22	30	160M/L*	7.31	8.3	3	3.3	0.0639	6	13	125	70	2930	89.0	89.5	90.0	0.70	0.80	0.85	43.7
30	40	180M/L	9.87	9.3	3	3.5	0.1301	9	20	181	70	2960	91.0	91.9	91.9	0.68	0.79	0.84	59.1
IV Poles																			
0.12	0.16	63	0.083	4.5	2.8	3.2	0.0003	20	44	6.2	44	1405	45.0	51.0	52.0	0.41	0.51	0.62	0.565
0.18	0.25	63	0.128	3.5	2	2.2	0.0004	23	51	7.4	44	1370	46.0	54.0	58.0	0.49	0.63	0.72	0.655
0.25	0.33	71	0.178	3.7	1.8	1.9	0.0004	28	62	8.8	43	1370	53.0	58.0	61.5	0.50	0.62	0.71	0.869
0.37	0.5	71	0.264	3.7	2	2	0.0006	17	37	9.3	43	1365	58.0	62.0	66.0	0.50	0.63	0.76	1.12
0.55	0.75	80	0.379	5.4	2	2.8	0.0019	8	18	12.7	44	1415	63.0	68.0	70.0	0.57	0.70	0.80	1.49
0.75	1	80	0.514	6.7	2.1	2.2	0.0023	10	22	14.0	44	1420	63.5	71.0	72.1	0.55	0.70	0.81	1.95
1.1	1.5	90S/L	0.744	5.6	2.3	2.4	0.0039	8	18	18.0	49	1440	70.0	75.0	75.5	0.55	0.69	0.79	2.80
1.5	2	90S/L	1.01	5.5	2	2.4	0.0048	8	18	22.0	49	1440	74.0	77.0	77.2	0.58	0.73	0.82	3.60
2.2	3	100L	1.51	6.0	2.4	2.6	0.0065	9	20	26.5	53	1420	79.0	80.0	80.0	0.60	0.73	0.81	5.16
3	4	100L	2.06	6.0	2.8	3	0.0084	8	18	30.0	53	1420	79.0	80.0	81.5	0.57	0.72	0.81	6.91
4	5.5	112M	2.71	7.0	2.1	2.5	0.0147	7	15	43.0	56	1440	82.0	83.1	83.1	0.62	0.75	0.82	8.77
5.5	7.5	S132S	3.69	6.5	2.1	2.5	0.0349	6	13	52.5	60	1450	83.5	84.5	85.0	0.63	0.77	0.84	11.7
7.5	10	132M	5.00	6.7	2.4	2.8	0.0465	8	18	66.0	60	1460	84.0	85.5	86.0	0.63	0.77	0.84	15.8
9.2	12.5	160M/L	6.10	6.8	2.3	2.6	0.0633	6	13	83.0	67	1470	86.0	87.0	87.0	0.65	0.77	0.84	19.2
11	15	160M/L	7.29	7.0	2.6	2.8	0.0730	6	13	100	67	1470	86.0	87.5	88.0	0.62	0.74	0.81	23.5
15	20	160M/L	9.94	7.4	2.7	3	0.1025	8	18	115	67	1470	88.0	88.5	89.0	0.64	0.76	0.82	31.3
18.5	25	180M/L	12.3	7.0	2.5	2.7	0.1566	11	24	156	64	1470	88.5	89.5	89.5	0.67	0.77	0.84	37.4
22	30	180M/L	14.6	7.2	2.7	2.9	0.1827	8	18	170	64	1465	89.0	90.5	90.5	0.69	0.80	0.85	43.5
30	40	200M/L	19.7	7.0	2.5	2.7	0.2935	6	13	220	69	1480	90.0	90.7	90.7	0.66	0.78	0.83	60.5
37	50	200M/L	24.5	7.0	2.3	2.5	0.3735	14	31	240	69	1470	90.0	91.0	91.5	0.73	0.82	0.86	71.5
High-Output Design																			
0.25	0.33	63	0.176	5.0	2.5	2.5	0.0007	12	26	7.6	44	1380	55.0	61.0	61.5	0.45	0.55	0.67	0.922
0.55	0.75	71	0.387	5.0	2.8	2.9	0.0009	19	42	10.4	43	1385	66.0	70.5	72.0	0.45	0.58	0.68	1.71
1.1	1.5	80	0.774	5.0	2.3	2.3	0.0032	10	22	15.0	44	1385	68.0	72.0	75.0	0.55	0.70	0.81	2.75
2.2	3	90S/L	1.52	5.8	2.7	2.5	0.0066	8	18	24.0	49	1410	78.0	79.0	80.0	0.57	0.71	0.80	5.22
4	5.5	100L*	2.80	6.7	2.6	2.6	0.0105	7	15	34.0	53	1390	81.0	82.0	83.1	0.64	0.76	0.83	8.81
5.5	7.5	112M*	3.75	6.5	2.1	2.6	0.0188	8	18	45.0	56	1430	85.0	85.0	84.7	0.67	0.76	0.81	12.2
5.5	7.5	132M	3.69	6.5	2.1	2.5	0.0349	6	13	52.5	60	1450	83.5	84.5	85.0	0.63	0.77	0.84	11.7
5.5	7.5	132S	3.69	6.5	2.1	2.5	0.0349	6	13	52.5	60	1450	83.5	84.5	85.0	0.63	0.77	0.84	11.7
9.2	12.5	132M	6.16	7.5	2.2	2.8	0.0582	6	13	65.0	60	1455	85.5	86.5	87.0	0.64	0.78	0.85	18.9
18.5	25	160M/L*	12.3	7.2	2.6	2.8	0.1123	6	13	125	67	1465	88.0	89.0	89.5	0.63	0.75	0.81	38.7
30	40	180M/L*	20.0	7.2	3	2.9	0.2075	7	15	180	64	1460	88.5	90.0	90.7	0.61	0.73	0.81	62.0

IE1 - Standard Efficiency - 50 Hz [1) 2)]

Output		Frame	Full Load Torque (kgfm)	Locked Rotor Current Il/In	Locked Rotor Torque Tl/Tn	Break-down Torque Tb/Tn	Inertia J (kgm2)	Allowable locked rotor time (s)		Weight (kg)	Sound dB(A)	380 V							
												Rated speed (rpm)	% of full load						Full load current In (A)
													Efficiency			Power Factor			
kW	HP							Hot	Cold				50	75	100	50	75	100	
VI Poles																			
0.12	0.16	63	0.131	2.6	1.7	1.6	0.0005	46	101	7.1	43	890	43.0	47.0	48.0	0.44	0.55	0.67	0.567
0.18	0.25	71	0.196	3.5	1.8	2.4	0.0008	50	110	10.2	43	895	48.0	52.0	54.0	0.38	0.48	0.58	0.874
0.25	0.33	71	0.271	3.5	2.2	2.2	0.0009	43	95	10.5	43	900	56.5	57.0	57.5	0.40	0.50	0.57	1.16
0.37	0.5	80	0.392	3.8	1.7	1.7	0.0019	16	35	13.5	43	920	55.0	60.0	62.0	0.50	0.64	0.73	1.24
0.55	0.75	80	0.576	4.0	2	2.6	0.0030	10	22	14.0	43	930	65.0	65.8	65.8	0.51	0.66	0.76	1.67
0.75	1	90S/L	0.803	4.2	1.9	2	0.0045	16	35	21.0	45	910	66.0	69.0	70.0	0.53	0.66	0.76	1.99
1.1	1.5	90S/L	1.16	4.8	2.2	2.1	0.0062	9	20	22.0	45	925	70.0	71.0	73.0	0.53	0.66	0.73	3.14
1.5	2	100L	1.57	4.1	2	2.2	0.0090	17	37	27.0	44	930	72.0	75.5	75.5	0.51	0.65	0.73	4.14
2.2	3	112M	2.28	5.5	2.2	2.3	0.0165	14	31	37.0	49	940	76.0	78.5	78.5	0.53	0.66	0.74	5.64
3	4	S132S	3.06	5.3	2	2.2	0.0340	20	44	60.0	53	955	78.0	80.5	80.5	0.55	0.68	0.75	7.18
4	5.5	132M	4.06	5.8	2.3	2.4	0.0446	19	42	59.0	53	960	80.0	81.5	82.0	0.54	0.66	0.74	9.76
5.5	7.5	132M	5.58	6.4	2.2	2.8	0.0581	15	33	73.0	53	960	81.0	83.0	83.5	0.49	0.62	0.71	13.7
7.5	10	160M/L	7.49	6.2	2	2.7	0.1051	6	13	102	57	975	83.5	84.7	84.7	0.57	0.70	0.79	17.1
9.2	12.5	160M/L	9.24	6.1	2	2.6	0.1261	6	13	110	57	970	85.0	85.5	85.6	0.60	0.73	0.81	20.2
11	15	160M/L	11.0	6.4	2.5	2.8	0.1541	9	20	120	57	970	86.5	87.0	87.0	0.60	0.73	0.80	24.0
15	20	180M/L	14.9	8.4	2.5	3.7	0.2981	6	13	135	56	980	87.0	87.7	87.7	0.61	0.73	0.81	32.1
18.5	25	200M/L	18.4	7.0	2.4	2.7	0.3335	8	18	200	58	980	88.0	88.6	88.6	0.66	0.77	0.82	38.7
22	30	200M/L	21.9	7.8	3	3.2	0.4037	7	15	220	58	980	88.0	89.2	89.2	0.60	0.72	0.78	48.0
High-Output Design																			
3	4	112M	3.11	6.3	2.6	2.6	0.0257	10	22	46.0	49	940	79.0	80.0	80.0	0.50	0.64	0.71	7.43
3	4	132M	3.06	5.3	2	2.2	0.0340	20	44	60.0	53	955	78.0	80.5	80.5	0.55	0.68	0.75	7.18
3	4	132S	3.06	5.3	2	2.2	0.0340	20	44	60.0	53	955	78.0	80.5	80.5	0.55	0.68	0.75	7.18
VIII Poles																			
0.12	0.16	71	0.174	3.0	1.8	2.3	0.0008	50	110	10.5	41	670	36.3	39.7	39.7	0.40	0.45	0.51	0.900
0.18	0.25	80	0.252	3.5	2.1	2.8	0.0021	15	33	13.0	42	695	33.0	40.0	42.0	0.48	0.55	0.60	1.08
0.25	0.33	80	0.350	4.0	2.5	3.3	0.0028	20	44	14.2	42	695	44.0	47.5	47.5	0.40	0.48	0.56	1.43
0.37	0.5	90S/L	0.511	4.0	1.8	2.5	0.0039	15	33	15.4	44	705	45.0	51.0	53.0	0.42	0.52	0.59	1.80
0.55	0.75	90S/L	0.794	3.3	1.9	2	0.0056	25	55	22.0	44	675	58.0	60.0	60.0	0.43	0.56	0.66	2.11
0.75	1	100L	1.02	4.5	2.3	2.8	0.0079	15	33	25.0	50	715	62.0	66.0	66.0	0.42	0.52	0.61	2.83
1.1	1.5	100L	1.53	3.7	1.6	2.1	0.0118	24	53	28.5	50	700	69.0	69.5	70.0	0.44	0.56	0.65	3.67
1.5	2	112M	2.06	5.0	2	2.3	0.0178	15	33	36.5	46	710	68.0	70.0	71.0	0.45	0.58	0.68	4.72
2.2	3	S132S	3.02	5.5	2	2.4	0.0602	9	20	65.0	48	710	75.5	76.5	76.5	0.52	0.64	0.73	5.99
3	4	132M	4.12	6.0	2.4	2.7	0.0728	8	18	66.0	48	710	76.5	77.5	77.5	0.52	0.64	0.72	8.17
4	5.5	160M/L	5.34	5.2	2	2.9	0.0980	10	22	97.0	53	730	75.0	78.5	79.2	0.48	0.62	0.71	10.8
5.5	7.5	160M/L	7.34	5.5	2.1	3	0.1191	8	18	100	53	730	78.0	80.5	81.4	0.48	0.62	0.71	14.4
7.5	10	160M/L	10.0	5.7	2.5	3.2	0.1471	12	26	115	53	730	81.5	83.1	83.1	0.49	0.62	0.71	19.3
9.2	12.5	180M/L	12.2	7.0	2.1	2.9	0.2308	8	18	120	51	735	84.0	84.5	84.5	0.56	0.70	0.78	21.2
11	15	180M/L	14.6	7.4	2.4	3.1	0.2993	8	18	130	51	735	84.0	85.0	85.0	0.55	0.68	0.76	25.9
15	20	200M/L	20.0	6.0	2.1	2.3	0.3692	15	33	150	56	730	86.5	87.5	87.5	0.56	0.68	0.75	34.7
High-Output Design																			
2.2	3	132S	3.02	5.5	2.0	2.4	0.0602	9	20	65.0	48	710	75.5	76.5	76.5	0.52	0.64	0.73	5.99
X Poles																			
0.12	0.16	80	0.209	2.3	2.2	2.4	0.0033	40	88	16.5	42	560	36.0	43.0	47.0	0.38	0.45	0.52	0.746
0.18	0.25	90S/L	0.316	2.7	2	2.2	0.0049	33	73	20.0	43	555	37.0	44.0	48.0	0.39	0.47	0.54	1.05
0.25	0.33	90S/L	0.443	2.9	2.1	2.2	0.0055	33	73	19.5	43	550	39.0	46.0	48.0	0.38	0.47	0.55	1.44
0.37	0.5	100L	0.632	3.2	2.2	2.3	0.0110	43	95	31.5	50	570	43.0	50.0	53.0	0.27	0.34	0.40	2.65
0.55	0.75	112M	0.940	4.1	2.3	2.4	0.0183	55	121	33.0	46	570	55.0	63.0	65.0	0.36	0.45	0.53	2.42
0.75	1	S132S	1.26	5.7	2.1	2.8	0.0502	40	88	45.0	48	580	62.5	69.5	72.0	0.40	0.44	0.52	3.04
1.1	1.5	132M	1.88	5.0	2	2.3	0.0592	42	92	56.0	48	570	70.0	74.0	75.0	0.42	0.54	0.63	3.54
1.5	2	132M	2.56	5.3	2	2.3	0.0740	39	86	70.0	48	570	71.0	75.0	76.0	0.44	0.56	0.64	4.68
High-Output Design																			
0.75	1	132S	1.26	5.7	2.1	2.8	0.0502	40	88	45.0	48	580	62.5	69.5	72.0	0.40	0.44	0.52	3.04
1.1	1.5	132S	1.88	5.0	2	2.3	0.0592	42	92	56.0	48	570	70.0	74.0	75.0	0.42	0.54	0.63	3.54
1.1	1.5	S132S	1.88	5.0	2	2.3	0.0592	42	92	56.0	48	570	70.0	74.0	75.0	0.42	0.54	0.63	3.54
1.5	2	132S	2.56	5.3	2	2.3	0.0740	39	86	70.0	48	570	71.0	75.0	76.0	0.44	0.56	0.64	4.68
XII Poles																			
0.12	0.16	90S/L	0.246	2.3	1.8	2.0	0.0049	51	112	14.5	43	475	26.0	32.0	37.0	0.35	0.40	0.46	1.07
0.18	0.25	90S/L	0.381	2.3	2	2.1	0.0066	45	99	19.7	43	460	30.0	36.0	40.0	0.31	0.37	0.43	1.59
0.25	0.33	100L	0.513	2.6	2	2.5	0.0110	80	176	26.5	50	475	37.0	45.0	49.0	0.27	0.32	0.38	2.04
0.37	0.5	112M	0.767	3.0	2	2.3	0.0187	40	88	33.0	46	470	42.0	51.0	55.0	0.32	0.38	0.45	2.27
0.55	0.75	S132S	1.12	4.1	2.3	2.6	0.0493	60	132	45.0	48	480	56.0	63.0	66.0	0.31	0.39	0.48	2.64
0.75	1	132M	1.52	4.1	2.3	2.6	0.0592	50	110	56.0	48	480	56.0	63.0	66.0	0.31	0.40	0.48	3.60
1.1	1.5	132M	2.26	4.4	2.3	2.5	0.0740	43	95	70.0	48	475	60.0	65.0	68.0	0.32	0.42	0.50	4.92
High-Output Design																			
0.55	0.75	132S	1.12	4.1	2.3	2.6	0.0493	60	132	45.0	48	480	56.0	63.0	66.0	0.31	0.39	0.48	2.64

Notes:

(1) Efficiency values are given according to IEC 60034-2-1. They are calculated according to indirect method, with stray load losses determined by measurement.

(2) With effect from 1st January 2017, IE2 motors placed onto the European Market and rated at 0.75 kW or above, must be used with a variable speed drive unless their design falls outside of the scope of the European Regulation or their final installation will be outside of the EU / EEA.

(3) Motor with class F (105K) temperature rise.

IE2 - High Efficiency - 50 Hz [1) 2)]

Output		Frame	Full Load Torque (kgfm)	Locked Rotor Current Il/In	Locked Rotor Torque Tl/Tn	Break-down Torque Tb/Tn	Inertia J (kgm2)	Allowable locked rotor time (s)		Weight (kg)	Sound dB(A)	380 V							
												Rated speed (rpm)	% of full load						Full load current In (A)
													Efficiency			Power Factor			
kW	HP							Hot	Cold				50	75	100	50	75	100	
II Poles																			
0.12	0.16	63	0.042	4.8	3.0	2.9	0.0001	37	81	6.3	52	2790	53.0	60.0	60.7	0.53	0.66	0.75	0.400
0.18	0.25	63	0.064	5.0	2.6	3.4	0.0001	18	40	6.8	52	2745	57.0	62.0	64.0	0.48	0.62	0.73	0.585
0.25	0.33	63	0.090	5.0	2.3	2.9	0.0002	15	33	7.0	52	2710	64.0	66.0	66.0	0.51	0.66	0.78	0.738
0.37	0.5	71	0.127	5.8	2.5	2.6	0.0004	12	26	9.3	56	2830	68.0	70.0	71.0	0.60	0.75	0.84	0.942
0.55	0.75	71	0.193	5.8	2.4	2.4	0.0005	9	20	11.2	56	2780	70.0	72.0	74.1	0.68	0.82	0.88	1.28
0.75	1	80	0.261	6.5	2.8	2.8	0.0008	14	31	11.2	59	2800	76.0	78.5	79.5	0.67	0.80	0.86	1.66
1.1	1.5	80	0.383	6.5	2.8	2.8	0.0009	10	22	11.9	59	2800	78.0	80.0	80.0	0.67	0.79	0.85	2.45
1.5	2	90S/L	0.507	7.0	2.6	3.1	0.0021	7	15	18.2	62	2880	80.0	82.0	82.0	0.63	0.76	0.83	3.35
2.2	3	L90S/L	0.745	8.4	3.2	3.2	0.0035	5	11	22.8	62	2875	82.2	82.7	83.2	0.64	0.77	0.84	4.78
3	4	100L	1.01	7.5	2.3	3	0.0051	7	15	26.3	67	2900	83.0	84.5	85.0	0.66	0.78	0.86	6.23
4	5.5	112M	1.35	7.0	2	2.8	0.0088	10	22	34.1	64	2880	86.0	86.0	86.0	0.73	0.83	0.88	8.03
5.5	7.5	S132S	1.82	7.5	2.2	3.4	0.0197	13	29	50.8	67	2945	86.0	87.0	87.0	0.65	0.77	0.84	11.5
7.5	10	S132S	2.48	8.1	2.4	3.4	0.0251	10	22	58.2	67	2945	87.0	88.0	88.1	0.68	0.79	0.85	15.3
9.2	12.5	132M	3.04	8.5	2.6	3.6	0.0234	8	18	63.1	67	2945	88.2	89.5	89.9	0.65	0.78	0.85	18.3
11	15	160M/L	3.64	7.9	2.7	3.2	0.0421	10	22	94.1	70	2940	88.5	89.4	89.4	0.71	0.81	0.86	21.8
15	20	160M/L	4.97	8.1	2.8	3.2	0.0506	7	15	101	70	2940	89.5	90.3	90.3	0.73	0.82	0.87	29.1
18.5	25	160M/L	6.13	8.4	3	3.3	0.0590	8	18	113	70	2940	90.0	90.9	90.9	0.70	0.80	0.85	36.4
22	30	180M/L	7.24	8.3	2.5	3	0.0975	8	18	145	70	2960	91.5	91.6	91.6	0.68	0.79	0.84	43.5
30	40	200M/L	9.87	7.2	2.4	2.8	0.1532	10	22	188	74	2960	91.2	92.0	92.0	0.70	0.80	0.84	58.9
37	50	200M/L	12.2	7.8	2.4	2.7	0.1703	8	18	197	74	2965	92.0	92.5	92.5	0.74	0.83	0.86	70.6
High-Output Design																			
0.37	0.5	63	0.132	5.0	2.2	2.2	0.0002	7	15	7.2	52	2740	64.0	67.0	69.5	0.56	0.71	0.81	0.999
0.75	1	71	0.261	5.8	2.8	2.8	0.0005	14	31	12.2	56	2800	77.0	77.5	77.6	0.67	0.80	0.87	1.68
0.75	1	90S/L	0.254	7.0	2	3.5	0.0012	15	33	17.5	62	2880	77.0	78.0	78.0	0.62	0.74	0.81	1.80
1.1	1.5	90S/L	0.375	6.1	2.5	2.6	0.0014	12	26	19.0	62	2860	80.0	80.5	80.5	0.65	0.77	0.83	2.51
1.5	2	80	0.527	6.5	3.1	3	0.0009	15	33	17.6	59	2770	80.0	81.0	81.5	0.65	0.78	0.85	3.29
2.2	3	100L	0.739	7.8	2.4	3	0.0043	8	18	27.8	67	2900	80.0	82.5	83.2	0.66	0.78	0.84	4.78
2.2	3	90S/L	0.755	6.6	3	3	0.0022	9	20	19.4	62	2840	83.0	83.6	83.6	0.63	0.76	0.83	4.82
3	4	L90S/L	1.03	7.1	3.4	3.4	0.0030	9	20	29.5	62	2840	84.0	84.6	84.6	0.61	0.75	0.82	6.57
4	5.5	100L	1.36	7.8	2.8	3.3	0.0064	9	20	36.4	67	2870	85.2	85.8	85.8	0.67	0.80	0.86	8.23
5.5	7.5	112M	1.86	7.3	2.7	3	0.0088	11	24	46.0	64	2880	86.5	87.0	87.0	0.72	0.82	0.87	11.1
5.5	7.5	132M	1.82	7.5	2.2	3.4	0.0197	13	29	50.8	67	2945	86.0	87.0	87.0	0.65	0.77	0.84	11.5
5.5	7.5	132S	1.82	7.5	2.2	3.4	0.0197	13	29	50.8	67	2945	86.0	87.0	87.0	0.65	0.77	0.84	11.5
7.5	10	132M	2.48	8.1	2.4	3.4	0.0251	10	22	58.2	67	2945	87.0	88.0	88.1	0.68	0.79	0.85	15.3
7.5	10	132S	2.48	8.1	2.4	3.4	0.0251	10	22	58.2	67	2945	87.0	88.0	88.1	0.68	0.79	0.85	15.3
7.5	10	L112M	2.55	7.9	3	3.4	0.0109	10	22	52.5	64	2870	87.3	88.1	88.1	0.67	0.79	0.85	15.3
11	15	132M	3.65	7.7	2.8	3.4	0.0270	12	26	72.3	67	2935	89.3	90.0	90.7	0.70	0.81	0.86	21.5
IV Poles																			
0.12	0.16	63	0.084	5.0	2.8	3.5	0.0004	20	44	6.3	44	1395	53.0	58.0	59.1	0.45	0.56	0.67	0.460
0.18	0.25	63	0.125	4.1	2	2	0.0006	20	44	7.6	44	1400	53.0	59.0	64.7	0.47	0.60	0.68	0.622
0.25	0.33	71	0.173	4.5	2	2.2	0.0007	68	150	10.2	43	1410	59.0	65.0	68.5	0.49	0.62	0.71	0.781
0.37	0.5	71	0.257	4.3	2	2	0.0008	48	106	10.8	43	1400	63.0	68.0	72.7	0.50	0.62	0.72	1.07
0.55	0.75	80	0.372	5.8	1.9	3	0.0029	12	26	13.6	44	1440	71.0	73.8	77.1	0.47	0.62	0.74	1.46
0.75	1	80	0.518	6.0	2.6	2.6	0.0029	15	33	14.0	44	1410	79.0	79.6	79.8	0.63	0.76	0.81	1.76
1.1	1.5	90S/L	0.736	6.5	2	2.9	0.0060	9	20	19.0	49	1455	80.0	81.6	81.6	0.53	0.67	0.76	2.69
1.5	2	L90S/L	1.00	6.7	1.7	2.7	0.0074	8	18	21.3	49	1460	77.2	80.6	82.8	0.54	0.68	0.77	3.58
2.2	3	100L	1.50	7.0	2.9	3	0.0105	11	24	32.8	53	1430	83.0	84.5	84.5	0.60	0.73	0.81	4.88
3	4	L100L	2.02	8.1	3.5	3.8	0.0120	6	13	29.5	53	1445	83.0	84.5	85.5	0.54	0.68	0.76	7.01
4	5.5	L112M	2.69	6.9	2.1	2.8	0.0207	9	20	41.0	56	1450	85.5	86.0	86.7	0.61	0.74	0.81	8.67
5.5	7.5	S132S	3.67	7.3	1.9	3	0.0528	8	18	56.1	56	1460	86.5	87.3	87.7	0.68	0.80	0.86	11.1
7.5	10	132M	4.97	7.8	2.1	3	0.0528	7	15	63.0	56	1470	86.5	88.0	88.7	0.55	0.69	0.80	16.1
9.2	12.5	160M/L	6.10	7.1	2.6	2.8	0.0638	8	18	105	67	1470	87.5	89.0	89.5	0.63	0.76	0.82	19.1
11	15	160M/L	7.29	6.9	2.5	2.7	0.0828	8	18	107	67	1470	87.5	89.0	89.8	0.63	0.76	0.82	22.7
15	20	160M/L	9.94	7.4	2.7	3	0.1069	8	18	115	67	1470	89.5	90.6	90.6	0.64	0.76	0.82	30.6
18.5	25	180M/L	12.3	8.0	2.9	3.3	0.1573	8	18	139	64	1470	90.5	91.2	91.2	0.67	0.78	0.83	37.2
22	30	180M/L	14.6	8.0	3	3.3	0.2010	8	18	159	64	1470	91.0	91.6	91.6	0.68	0.79	0.84	43.5
30	40	200M/L	19.9	7.0	2.5	2.8	0.2941	8	18	198	69	1470	92.0	92.3	92.3	0.69	0.80	0.84	58.7
37	50	200M/L	24.4	6.0	2.4	2.7	0.3721	14	31	233	69	1475	92.8	93.0	93.0	0.70	0.80	0.83	72.8

IE2 - High Efficiency - 50 Hz [1) 2)]

Output		Frame	Full Load Torque (kgfm)	Locked Rotor Current Il/In	Locked Rotor Torque Tl/Tn	Break-down Torque Tb/Tn	Inertia J (kgm2)	Allowable locked rotor time (s)		Weight (kg)	Sound dB(A)	380 V							
												Rated speed (rpm)	% of full load						Full load current In (A)
													Efficiency			Power Factor			
kW	HP							Hot	Cold				50	75	100	50	75	100	
IV Poles High-Output Design																			
0.75	1	90S/L	0.499	6.2	2.1	2.6	0.0038	14	31	18.0	49	1465	78.0	80.0	80.0	0.50	0.64	0.74	1.93
1.1	1.5	L80	0.765	6.6	2.6	2.8	0.0037	11	24	14.9	44	1400	80.5	81.4	81.4	0.66	0.79	0.84	2.44
1.5	2	100L	1.01	7.5	2.8	3.2	0.0067	10	22	28.0	53	1440	79.0	82.5	82.8	0.55	0.68	0.76	3.62
1.5	2	90S/L	1.01	6.3	2.4	2.8	0.0055	10	22	20.3	49	1440	81.5	83.0	83.0	0.57	0.71	0.80	3.43
2.2	3	112M	1.47	7.0	1.9	2.6	0.0117	23	51	39.0	56	1460	84.5	85.0	85.0	0.63	0.75	0.81	4.85
2.2	3	L90S/L	1.50	7.4	2.4	2.9	0.0077	9	20	22.6	49	1430	83.8	84.3	84.3	0.56	0.70	0.79	5.02
3	4	100L	2.06	6.5	3.2	3.3	0.0097	14	31	33.8	53	1420	85.0	85.6	85.6	0.63	0.75	0.82	6.49
4	5.5	112M	2.71	6.6	2	2.6	0.0156	13	29	35.3	56	1440	86.0	86.7	86.7	0.62	0.74	0.80	8.76
4	5.5	132S	2.64	7.5	1.85	2.99	0.0341	14	31	50.5	56	1475	86.5	87.0	87.2	0.58	0.72	0.80	8.72
4	5.5	S132S	2.64	7.5	1.85	2.99	0.0341	14	31	50.5	56	1475	86.5	87.0	87.2	0.58	0.72	0.80	8.72
5.5	7.5	132M	3.67	7.3	1.9	3	0.0528	8	18	56.1	56	1460	86.5	87.3	87.7	0.68	0.80	0.86	11.1
5.5	7.5	132S	3.67	7.3	1.9	3	0.0528	8	18	56.1	56	1460	86.5	87.3	87.7	0.68	0.80	0.86	11.1
5.5	7.5	L112M	3.72	7.1	2.7	3	0.0208	11	24	52.0	56	1440	87.0	87.7	87.7	0.55	0.68	0.76	12.2
7.5	10	132S	4.97	7.8	2.1	3	0.0528	7	15	63.0	56	1470	86.5	88.0	88.7	0.55	0.69	0.80	16.1
7.5	10	160M/L	4.97	6.7	2.3	2.6	0.0783	8	18	104	67	1470	86.5	88.0	88.7	0.65	0.77	0.84	15.3
9.2	12.5	132M	6.16	7.5	2.4	3	0.0604	7	15	75.0	56	1455	89.2	89.5	89.5	0.65	0.76	0.83	18.8
VI Poles																			
0.12	0.16	63	0.129	3.0	1.9	2.0	0.0006	52	114	7.4	43	905	42.0	50.0	52.0	0.43	0.53	0.63	0.557
0.18	0.25	71	0.192	3.2	2	2	0.0008	96	211	10.5	43	915	52.0	58.0	59.0	0.40	0.51	0.58	0.799
0.25	0.33	71	0.274	3.2	1.9	2.1	0.0008	70	154	12.5	43	890	53.0	60.0	61.6	0.37	0.48	0.58	1.06
0.37	0.5	80	0.390	4.1	2	2.4	0.0022	24	53	14.0	43	925	65.0	67.0	67.6	0.47	0.62	0.72	1.16
0.55	0.75	80	0.576	4.5	2.3	2.5	0.0030	21	46	13.6	43	930	65.0	71.0	73.1	0.50	0.62	0.72	1.59
0.75	1	90S/L	0.790	4.5	2	2.1	0.0055	23	51	18.2	45	925	74.5	76.0	76.0	0.51	0.64	0.73	2.05
1.1	1.5	90S/L	1.16	4.7	2.3	2.2	0.0066	17	37	20.7	45	925	76.0	78.1	78.1	0.50	0.63	0.73	2.93
1.5	2	100L	1.54	6.0	2	2.4	0.0110	15	33	25.9	44	950	76.0	79.8	79.8	0.52	0.65	0.73	3.92
2.2	3	112M	2.24	6.0	2	2.4	0.0257	10	22	38.8	49	955	80.0	81.8	81.8	0.52	0.65	0.73	5.60
3	4	S132S	3.04	5.7	2	2.4	0.0359	31	68	53.0	53	960	82.5	83.6	83.6	0.50	0.63	0.71	7.68
4	5.5	132M	4.04	6.0	2.1	2.5	0.0453	21	46	55.4	53	965	84.0	84.8	84.8	0.51	0.64	0.72	9.96
5.5	7.5	132M	5.55	6.4	2.5	2.8	0.0604	19	42	75.0	53	965	85.5	86.1	86.1	0.51	0.64	0.72	13.5
7.5	10	160M/L	7.45	6.6	2.2	2.9	0.1055	10	22	89.1	56	980	86.6	87.2	87.2	0.58	0.71	0.78	16.7
9.2	12.5	160M/L	9.14	6.8	2.3	3	0.1266	10	22	109	57	980	86.5	87.5	88.1	0.55	0.69	0.77	20.6
11	15	160M/L	11.0	6.5	2.4	2.8	0.1689	10	22	114	57	970	88.0	88.7	88.7	0.63	0.75	0.81	23.3
15	20	180M/L	14.9	8.4	2.5	3.7	0.2705	6	13	146	56	980	87.0	89.0	89.7	0.61	0.73	0.81	31.4
18.5	25	200M/L	18.4	7.5	2.7	2.7	0.3335	8	18	178	58	980	89.0	90.4	90.4	0.62	0.74	0.80	38.8
22	30	200M/L	21.9	8.0	3	3.1	0.3868	8	18	199	58	980	88.5	90.0	90.9	0.59	0.71	0.78	47.2
High-Output Design																			
3	4	132M	3.04	5.7	2.0	2.4	0.0359	31	68	53.0	53	960	82.5	83.6	83.6	0.50	0.63	0.71	7.68
3	4	132S	3.04	5.7	2	2.4	0.0359	31	68	53.0	53	960	82.5	83.6	83.6	0.50	0.63	0.71	7.68
5.5	7.5	160M/L	5.47	6.3	2	2.8	0.1191	14	31	106	56	980	85.0	85.5	86.0	0.59	0.72	0.79	12.3
VIII Poles																			
0.12	0.16	71	0.177	2.2	1.6	1.9	0.0008	60	132	10.0	41	660	40.0	48.0	50.0	0.33	0.41	0.50	0.729
0.18	0.25	80	0.254	3.1	1.9	2	0.0024	27	59	13.0	42	690	34.8	43.9	45.9	0.44	0.55	0.65	0.917
0.25	0.33	80	0.361	3.3	1.9	2.2	0.0029	32	70	14.3	42	675	47.0	52.5	55.0	0.43	0.55	0.66	1.05
0.37	0.5	90S/L	0.522	3.5	1.8	2	0.0044	23	51	16.0	44	690	46.1	53.2	56.1	0.41	0.52	0.62	1.62
0.55	0.75	90S/L	0.782	3.5	1.9	2	0.0060	31	68	18.9	44	685	61.0	64.0	64.0	0.44	0.56	0.66	1.98
0.75	1	100L	1.01	5.0	2	2.5	0.0110	18	40	30.5	50	720	60.0	68.0	70.0	0.40	0.49	0.58	2.81
1.1	1.5	100L	1.50	5.0	2	2.4	0.0127	14	31	32.0	50	715	62.0	69.0	70.8	0.40	0.51	0.59	4.00
1.5	2	112M	2.09	4.7	2.4	2.3	0.0202	12	26	39.0	46	700	77.0	79.0	79.0	0.44	0.57	0.67	4.31
2.2	3	S132S	3.06	5.5	2.2	2.4	0.0592	12	26	66.0	48	700	81.0	81.5	81.0	0.52	0.65	0.72	5.73
3	4	132M	4.12	6.2	2.4	2.9	0.0740	19	42	68.0	48	710	82.0	82.5	82.0	0.54	0.65	0.72	7.72
4	5.5	160M/L	5.34	5.5	2.1	3	0.0985	13	29	85.8	51	730	80.0	81.9	81.9	0.48	0.61	0.70	10.6
5.5	7.5	160M/L	7.34	5.5	2.1	3	0.1266	9	20	102	51	730	79.0	81.5	83.8	0.47	0.60	0.69	14.4
7.5	10	160M/L	10.0	5.6	2.4	3.1	0.1555	15	33	109	53	730	84.0	85.3	85.3	0.50	0.63	0.71	18.8
9.2	12.5	180M/L	12.2	7.0	2.1	2.9	0.2308	8	18	133	51	735	85.0	86.0	86.3	0.55	0.68	0.76	21.3
11	15	180M/L	14.6	7.4	2.3	3.1	0.3259	8	18	178	51	735	85.0	86.0	86.9	0.55	0.68	0.76	25.3
15	20	200M/L	19.9	6.0	2.3	2.3	0.4228	12	26	208	53	735	86.5	87.5	88.0	0.53	0.66	0.73	35.5
High-Output Design																			
2.2	3	132S	3.06	5.5	2.2	2.4	0.0592	12	26	66.0	48	700	81.0	81.5	81.0	0.52	0.65	0.72	5.73

Notes:
(1) Efficiency values are given according to IEC 60034-2-1. They are calculated according to indirect method, with stray load losses determined by measurement.
(2) With effect from 1st January 2017, IE2 motors placed onto the European Market and rated at 0.75 kW or above, must be used with a variable speed drive unless their design falls outside of the scope of the European Regulation or their final installation will be outside of the EU / EEA.
(3) Motor with class F (105K) temperature rise.

IE3 - Premium Efficiency - 50 Hz [1) 2)]

Output		Frame	Full Load Torque (kgfm)	Locked Rotor Current Il/In	Locked Rotor Torque Tl/Tn	Break-down Torque Tb/Tn	Inertia J (kgm2)	Allowable locked rotor time (s)		Weight (kg)	Sound dB(A)	380 V							
												Rated speed (rpm)	% of full load						Full load current In (A)
													Efficiency			Power Factor			
kW	HP							Hot	Cold				50	75	100	50	75	100	
II Poles																			
0.18	0.25	63	0.064	5.5	2.6	3.0	0.0002	20	44	7.0	52	2730	64.0	66.0	66.0	0.54	0.68	0.78	0.532
0.25	0.33	63	0.090	4.8	2.3	2.8	0.0002	15	33	7.2	52	2710	66.0	69.0	69.7	0.56	0.70	0.81	0.673
0.37	0.5	71	0.127	6.3	3	3.5	0.0004	12	26	9.5	56	2840	73.0	74.5	74.5	0.63	0.70	0.79	0.955
0.55	0.75	71	0.189	5.9	2.7	2.7	0.0005	15	33	11.2	56	2830	75.0	76.0	77.8	0.68	0.80	0.86	1.25
0.75	1	80	0.255	7.5	3.3	3.4	0.0008	25	55	12.1	59	2870	80.0	82.0	81.0	0.61	0.74	0.82	1.72
1.1	1.5	80	0.379	7.4	3.6	3.6	0.0009	23	51	13.5	59	2830	81.0	83.5	83.5	0.63	0.76	0.82	2.44
1.5	2	90S/L	0.504	8.0	2.6	3.5	0.0020	15	33	19.5	62	2900	83.0	84.2	84.2	0.64	0.75	0.82	3.31
2.2	3	90S/L	0.747	7.5	3.4	3.5	0.0026	12	26	22.0	62	2870	86.0	86.5	86.3	0.65	0.77	0.83	4.66
3	4	100L	1.01	7.9	2.5	3.3	0.0064	9	20	32.7	67	2905	85.0	86.5	87.1	0.65	0.78	0.85	6.16
4	5.5	112M	1.34	7.7	2.5	3.5	0.0080	14	31	42.6	62	2900	87.0	88.0	88.3	0.69	0.80	0.86	8.00
5.5	7.5	S132S	1.82	7.9	2.3	3.4	0.0216	14	31	59.3	63	2945	86.4	88.5	89.2	0.68	0.79	0.85	11.1
7.5	10	132S	2.48	8.8	2.8	3.9	0.0252	10	22	66.0	63	2950	87.0	89.0	90.1	0.63	0.76	0.83	15.3
9.2	12.5	132M	3.05	8.5	3	3.8	0.0306	12	26	70.2	63	2940	88.2	90.0	90.7	0.62	0.75	0.82	18.8
11	15	160M/L	3.63	9.2	3.1	3.8	0.0506	12	26	115	70	2955	88.5	90.5	91.2	0.70	0.80	0.85	21.6
15	20	160M/L	4.95	9.0	2.8	3.4	0.0565	8	18	118	70	2950	89.0	90.5	91.9	0.67	0.78	0.83	29.9
18.5	25	160M/L	6.12	8.8	3.1	3.4	0.0650	11	24	126	70	2945	90.0	91.0	92.4	0.71	0.81	0.85	35.8
22	30	180M/L	7.24	8.3	2.5	3.2	0.1192	10	22	161	70	2960	92.0	92.7	92.7	0.69	0.80	0.85	42.4
30	40	200M/L	9.85	7.6	2.4	2.7	0.2063	14	31	219	74	2965	92.0	93.0	93.3	0.76	0.84	0.87	56.1
37	50	200M/L	12.2	7.3	2.2	2.8	0.2114	18	40	231	74	2960	92.5	93.5	93.7	0.74	0.82	0.85	70.6
High-Output Design																			
0.75	1	90S/L	0.250	8.2	2.4	3.4	0.0015	15	33	15.0	62	2920	75.5	79.3	80.7	0.63	0.75	0.82	1.73
1.1	1.5	90S/L	0.368	7.8	2.2	3.3	0.0018	12	26	17.1	62	2910	79.4	81.8	82.7	0.63	0.75	0.82	2.46
4	5.5	132S	1.32	7.2	2.1	3.3	0.0180	19	42	56.2	63	2945	84.7	87.1	88.1	0.67	0.79	0.85	8.12
4	5.5	S132S	1.32	7.2	2.1	3.3	0.0180	19	42	56.2	63	2945	84.7	87.1	88.1	0.67	0.79	0.85	8.12
5.5	7.5	132M	1.82	7.9	2.3	3.4	0.0216	14	31	59.3	63	2945	86.4	88.5	89.2	0.68	0.79	0.85	11.1
5.5	7.5	132S	1.82	7.9	2.3	3.4	0.0216	14	31	59.3	63	2945	86.4	88.5	89.2	0.68	0.79	0.85	11.1
7.5	10	132M	2.48	8.8	2.8	3.9	0.0252	10	22	66.0	63	2950	87.0	89.0	90.1	0.63	0.76	0.83	15.3
11	15	132M	3.65	7.7	2.8	3.4	0.0306	12	26	74.1	63	2935	89.3	90.0	91.2	0.70	0.81	0.86	21.3
IV Poles																			
0.12	0.16	63	0.083	5.5	2.8	3.5	0.0004	20	44	7.3	44	1415	53.0	60.0	64.8	0.47	0.58	0.68	0.414
0.18	0.25	63	0.127	4.3	2.2	2.2	0.0006	30	66	7.6	44	1380	65.0	67.0	69.9	0.53	0.63	0.72	0.543
0.25	0.33	71	0.175	4.8	2.3	2.3	0.0007	30	66	10.7	43	1390	69.0	72.0	73.5	0.52	0.65	0.72	0.718
0.37	0.5	71	0.258	4.8	2.9	3	0.0008	30	66	10.9	43	1395	76.3	76.8	77.3	0.45	0.60	0.69	1.05
0.55	0.75	80	0.372	8.5	2.8	3.2	0.0026	18	40	16.2	44	1440	77.0	79.0	80.8	0.61	0.70	0.80	1.29
0.75	1	80	0.511	7.0	3.2	3.4	0.0032	18	40	13.8	44	1430	80.0	82.0	82.5	0.59	0.71	0.80	1.73
1.1	1.5	90S/L	0.736	7.6	2.5	3.3	0.0055	15	33	19.4	49	1455	83.0	84.5	84.8	0.57	0.70	0.78	2.53
1.5	2	90S/L	1.01	7.4	2.6	3	0.0066	13	29	20.9	49	1445	84.0	85.0	85.5	0.58	0.72	0.79	3.38
2.2	3	100L	1.49	7.6	2.5	3	0.0090	16	35	32.4	53	1435	85.0	86.5	86.7	0.55	0.68	0.78	4.95
3	4	L100L	2.03	7.8	3.5	3.7	0.0120	15	33	37.0	53	1440	87.0	88.0	88.0	0.58	0.71	0.78	6.64
4	5.5	112M	2.69	7.0	2.3	3.1	0.0182	15	33	39.9	56	1450	88.7	89.1	89.1	0.60	0.72	0.79	8.63
5.5	7.5	S132S	3.66	8.5	2.4	3.4	0.0528	15	33	56.0	56	1465	90.0	90.7	90.7	0.67	0.79	0.85	10.8
7.5	10	132M	4.99	8.5	2.5	3.4	0.0642	13	29	76.8	56	1465	87.5	90.0	90.6	0.67	0.78	0.84	14.9
11	15	160M/L	7.29	8.0	3.2	3.4	0.1071	12	26	111	67	1470	88.3	90.0	91.4	0.57	0.70	0.78	23.5
15	20	160M/L	9.97	7.1	2.6	2.8	0.1263	8	18	120	67	1465	89.2	90.2	92.1	0.64	0.76	0.82	30.2
18.5	25	180M/L	12.2	8.3	3	3.2	0.2088	12	26	168	64	1474	91.0	92.2	92.6	0.63	0.75	0.82	37.1
22	30	180M/L	14.6	8.5	3.2	3.6	0.2393	11	24	181	64	1470	91.5	92.5	93.0	0.64	0.76	0.82	43.8
30	40	200M/L	19.8	7.0	3.2	3.4	0.3743	8	18	233	69	1475	92.5	93.6	93.6	0.63	0.75	0.81	60.1
High-Output Design																			
0.75	1	90S/L	0.500	6.8	2.1	3.4	0.0049	16	35	17.5	49	1460	78.2	81.8	82.5	0.50	0.63	0.73	1.89
1.5	2	100L	1.01	7.8	2.5	3.4	0.0082	10	22	27.9	53	1445	84.0	85.3	85.3	0.54	0.67	0.76	3.52
2.2	3	112M	1.46	7.8	2.9	3.1	0.0143	31	68	37.9	56	1470	84.0	86.5	86.7	0.52	0.66	0.74	5.21
3	4	112M	2.01	8.1	2.3	3.1	0.0169	25	55	38.7	56	1455	86.3	87.7	87.7	0.56	0.69	0.76	6.84
5.5	7.5	132M	3.66	8.5	2.4	3.4	0.0528	15	33	56.0	56	1465	90.0	90.7	90.7	0.67	0.79	0.85	10.8
5.5	7.5	132S	3.66	8.5	2.4	3.4	0.0528	15	33	56.0	56	1465	90.0	90.7	90.7	0.67	0.79	0.85	10.8
7.5	10	L132M	4.99	8.5	2.5	3.4	0.0638	13	29	80.0	56	1465	87.5	90.0	90.6	0.67	0.78	0.84	14.9

IE3 - Premium Efficiency - 50 Hz [1) 2)]

Output		Frame	Full Load Torque (kgfm)	Locked Rotor Current Il/In	Locked Rotor Torque Tl/Tn	Break-down Torque Tb/Tn	Inertia J (kgm2)	Allowable locked rotor time (s)		Weight (kg)	Sound dB(A)	380 V							
												Rated speed (rpm)	% of full load						Full load current In (A)
													Efficiency			Power Factor			
kW	HP							Hot	Cold				50	75	100	50	75	100	
VI Poles																			
0.12	0.16	63	0.126	3.1	2.1	2.3	0.0007	30	66	7.8	43	925	50.0	55.0	57.7	0.40	0.50	0.59	0.536
0.18	0.25	71	0.195	3.2	2	2.1	0.0009	30	66	10.5	43	900	56.0	62.0	63.9	0.38	0.48	0.57	0.751
0.25	0.33	80	0.255	4.3	1.7	2.4	0.0029	25	55	12.0	43	955	63.6	68.5	68.8	0.47	0.60	0.71	0.778
0.37	0.5	80	0.390	4.5	1.9	2.1	0.0025	25	55	13.9	43	925	66.0	69.5	73.5	0.51	0.65	0.75	1.02
0.55	0.75	L80	0.567	5.1	2.9	3.1	0.0034	20	44	18.0	43	945	70.5	75.2	77.2	0.45	0.58	0.69	1.57
0.75	1	90S/L	0.777	5.2	2.5	2.8	0.0066	31	68	21.4	45	940	76.5	79.0	79.0	0.49	0.62	0.71	2.03
1.1	1.5	100L	1.12	6.0	2.1	3.2	0.0110	18	40	25.3	44	960	77.0	80.0	81.0	0.50	0.62	0.70	2.95
1.5	2	100L	1.54	5.5	2.3	2.8	0.0143	31	68	29.4	44	950	81.5	82.5	82.5	0.49	0.62	0.71	3.89
2.2	3	112M	2.23	6.4	2.4	2.9	0.0257	26	57	39.5	49	960	83.0	84.5	84.5	0.53	0.64	0.72	5.49
3	4	132S	3.01	6.0	1.9	2.5	0.0566	28	62	62.4	53	970	85.0	85.8	85.8	0.52	0.65	0.73	7.27
4	5.5	132M	4.06	6.5	2.2	2.5	0.0566	30	66	66.0	53	960	86.0	86.8	86.8	0.53	0.66	0.74	9.46
5.5	7.5	L132M	5.52	7.3	2.1	2.5	0.0755	26	57	73.2	53	970	86.0	87.0	88.0	0.50	0.64	0.72	13.2
7.5	10	160M/L	7.49	6.6	2.5	2.9	0.1614	19	42	117	54	975	86.0	88.5	89.1	0.61	0.74	0.80	16.0
11	15	160M/L	11.0	7.0	3.2	3.2	0.1689	13	29	123	54	977	87.5	89.4	90.3	0.54	0.68	0.76	24.3
15	20	180M/L	14.9	8.4	3.1	3.7	0.3310	8	18	174	56	980	90.0	91.2	91.2	0.61	0.74	0.81	30.8
18.5	25	200M/L	18.5	6.3	2.3	2.5	0.3861	17	37	206	58	975	90.5	91.8	92.0	0.67	0.78	0.82	37.3
22	30	200M/L	22.0	6.2	2.3	2.6	0.4388	15	33	219	58	975	90.4	92.0	92.2	0.65	0.75	0.82	44.2
High-Output Design																			
1.1	1.5	112M	1.10	7.5	2.2	3.7	0.0220	20	44	32.2	49	970	79.0	82.0	82.5	0.43	0.55	0.64	3.17
1.5	2	112M	1.52	6.0	2.1	2.8	0.0202	28	62	35.8	49	960	84.5	85.5	85.5	0.51	0.63	0.71	3.76
2.2	3	132S	2.20	6.5	2.2	2.6	0.0491	30	66	55.7	53	975	84.0	84.3	84.3	0.49	0.61	0.69	5.75
2.2	3	S132S	2.20	6.5	2.2	2.6	0.0491	30	66	55.7	53	975	84.0	84.3	84.3	0.49	0.61	0.69	5.75
3	4	132M	3.01	6.0	1.9	2.5	0.0566	28	62	62.4	53	970	85.0	85.8	85.8	0.52	0.65	0.73	7.27
5.5	7.5	160M/L	5.47	6.7	2.2	2.9	0.1264	15	33	112	54	980	87.0	88.0	88.0	0.58	0.70	0.77	12.3
VIII Poles																			
0.12	0.16	71	0.180	2.4	1.6	1.8	0.0009	30	66	11.5	41	650	44.0	50.0	50.7	0.35	0.43	0.50	0.719
0.18	0.25	80	0.258	3.3	2	2.2	0.0029	30	66	15.0	42	680	51.0	57.0	58.7	0.45	0.55	0.65	0.717
0.25	0.33	80	0.350	3.5	2	2.2	0.0034	30	66	15.5	42	695	53.0	60.0	64.1	0.42	0.52	0.63	0.941
0.37	0.5	90S/L	0.522	3.7	2.1	2.4	0.0055	30	66	19.0	44	690	61.0	66.0	69.3	0.41	0.53	0.62	1.31
0.55	0.75	90S/L	0.782	3.6	1.8	2.1	0.0066	29	64	23.0	44	685	63.0	72.5	73.0	0.44	0.57	0.67	1.71
0.75	1	100L	1.03	4.6	1.9	2.3	0.0127	30	66	28.8	50	710	72.5	75.5	75.5	0.41	0.53	0.62	2.43
1.1	1.5	100L	1.51	4.6	1.9	2	0.0143	30	66	30.8	50	710	73.0	76.0	77.7	0.41	0.53	0.62	3.47
1.5	2	112M	2.07	5.0	2.5	2.8	0.0238	28	62	37.4	46	705	79.0	80.5	80.5	0.45	0.59	0.68	4.17
2.2	3	S132S	3.02	6.2	2.3	2.5	0.0690	27	59	58.9	48	710	82.0	82.6	82.6	0.51	0.65	0.72	5.62
3	4	132M	4.12	6.4	2.4	2.6	0.0838	21	46	66.2	48	710	82.5	83.5	83.5	0.51	0.64	0.72	7.58
4	5.5	160M/L	5.34	5.6	2.1	3.1	0.1221	15	33	97.3	53	730	81.0	83.0	84.8	0.48	0.61	0.70	10.2
5.5	7.5	160M/L	7.34	5.7	2.4	3.2	0.1652	20	44	112	53	730	84.0	86.0	86.2	0.49	0.62	0.71	13.7
7.5	10	160M/L	10.1	5.3	2.2	2.8	0.1652	19	42	121	53	725	86.0	87.0	87.3	0.54	0.66	0.73	17.9
11	15	180M/L	14.7	6.5	2.3	2.7	0.3034	13	29	158	51	730	88.6	88.6	88.6	0.55	0.68	0.76	24.8
15	20	200M/L	19.9	5.0	2	2.2	0.5023	28	62	228	56	735	89.5	90.5	90.9	0.53	0.65	0.71	35.3
High-Output Design																			
2.2	3	132S	3.02	6.2	2.3	2.5	0.0690	27	59	58.9	48	710	82.0	82.6	82.6	0.51	0.65	0.72	5.62

Notes:

(1) Efficiency values are given according to IEC 60034-2-1. They are calculated according to indirect method, with stray load losses determined by measurement.

(2) With effect from 1st January 2017, IE2 motors placed onto the European Market and rated at 0.75 kW or above, must be used with a variable speed drive unless their design falls outside of the scope of the European Regulation or their final installation will be outside of the EU / EEA.

(3) Motor with class F (105K) temperature rise.

IE1 - Standard Efficiency - 60 Hz [1) 2)]

Output		Frame	Full Load Torque (kgfm)	Locked Rotor Current Il/In	Locked Rotor Torque Tl/Tn	Break-down Torque Tb/Tn	Inertia J (kgm2)	Allowable locked rotor time (s)		Weight (kg)	Sound dB(A)	220 V							
												Rated speed (rpm)	% of full load						Full load current In (A)
													Efficiency			Power Factor			
kW	HP							Hot	Cold				50	75	100	50	75	100	
II Poles																			
0.12	0.16	63	0.034	4.2	2.5	2.8	0.0001	13	29	4.4	56	3400	45.0	54.0	58.5	0.51	0.61	0.73	0.737
0.18	0.25	63	0.052	5.2	2.3	2.3	0.0002	9	20	5.5	56	3370	52.0	59.0	62.0	0.55	0.68	0.78	0.977
0.25	0.33	63	0.073	5.4	2.6	2.6	0.0002	7	15	5.5	56	3345	53.0	60.0	63.0	0.50	0.63	0.73	1.43
0.37	0.5	63	0.107	6.0	2.5	2.5	0.0002	6	13	6.5	56	3370	60.0	65.0	66.0	0.54	0.69	0.79	1.86
0.55	0.75	71	0.159	5.1	2.4	2.6	0.0003	8	18	6.5	60	3370	64.0	68.5	70.0	0.64	0.77	0.85	2.43
0.75	1	71	0.213	6.4	2.7	2.9	0.0004	7	15	8.1	58	3425	74.0	75.0	75.4	0.64	0.77	0.85	3.07
1.1	1.5	80	0.316	7.0	3	3	0.0007	12	26	9.6	62	3395	76.0	78.2	78.6	0.66	0.77	0.85	4.32
1.5	2	80	0.434	6.9	2.9	2.9	0.0008	9	20	10.4	62	3370	79.5	81.0	81.1	0.64	0.77	0.85	5.71
2.2	3	90S/L	0.618	7.8	3	3	0.0026	6	13	17.3	68	3465	78.5	80.0	81.6	0.65	0.76	0.82	8.63
3	4	90S/L	0.847	7.6	3.3	3.6	0.0025	7	15	16.8	68	3450	83.2	84.5	84.0	0.65	0.76	0.82	11.4
3.7	5	100L	1.03	7.6	2.5	3.2	0.0053	9	20	23.0	71	3495	82.0	84.4	84.6	0.69	0.79	0.85	13.5
4.5	6	112M	1.26	7.3	2.2	3	0.0063	9	20	29.0	69	3480	84.0	85.0	86.5	0.71	0.82	0.87	15.7
5.5	7.5	112M	1.53	7.7	2.6	3.5	0.0077	11	24	33.0	69	3500	85.1	86.7	86.7	0.72	0.80	0.87	19.1
7.5	10	S132S	2.08	7.2	2	2.9	0.0207	16	35	50.0	72	3520	85.2	87.3	87.5	0.75	0.85	0.88	25.6
9.2	12.5	132M	2.55	7.6	2.3	2.9	0.0207	7	15	53.0	72	3520	87.5	87.8	88.0	0.76	0.85	0.88	31.2
11	15	132M	3.04	8.2	2.6	3.3	0.0252	9	20	60.0	72	3525	87.0	88.7	88.7	0.75	0.84	0.88	37.0
15	20	160M/L	4.13	8.0	2.7	3.1	0.0397	9	20	102	75	3535	86.6	88.2	88.5	0.78	0.85	0.88	50.5
18.5	25	160M/L	5.08	9.6	3.3	3.7	0.0509	7	15	120	75	3545	86.2	88.3	89.5	0.73	0.82	0.86	63.1
22	30	160M/L	6.06	9.2	3.2	3.4	0.0622	9	20	138	75	3535	88.0	89.5	90.0	0.77	0.85	0.88	72.9
30	40	200M/L	8.22	6.5	2.1	2.4	0.1618	22	48	192	79	3555	89.0	91.0	91.0	0.75	0.82	0.85	102
37	50	200M/L	10.1	6.3	2.1	2.2	0.1958	23	51	216	79	3555	91.0	92.2	92.2	0.81	0.86	0.88	120
High-Output Design																			
0.25	0.33	71	0.071	6.3	3.0	3.0	0.0003	15	33	6.9	60	3430	55.0	62.5	63.9	0.65	0.75	0.83	1.24
0.37	0.5	71	0.105	6.3	3	3.2	0.0003	9	20	6.9	60	3420	60.0	65.0	68.0	0.63	0.76	0.84	1.70
0.55	0.75	80	0.157	6.2	1.9	2.3	0.0007	24	53	9.2	62	3415	71.0	72.0	72.0	0.70	0.80	0.84	2.39
0.75	1	80	0.215	7.0	2.6	3	0.0007	14	31	9.2	62	3405	69.5	74.0	77.1	0.65	0.77	0.84	3.04
1.1	1.5	90S/L	0.311	7.0	2.5	3	0.0015	11	24	12.9	68	3440	72.5	76.5	78.6	0.75	0.83	0.87	4.22
1.5	2	90S/L	0.420	7.5	2.5	3	0.0018	10	22	13.9	68	3475	78.0	80.0	81.1	0.69	0.80	0.86	5.64
3	4	100L	0.832	8.0	2.5	3.2	0.0053	10	22	23.0	71	3510	78.5	81.5	83.0	0.73	0.84	0.88	10.8
5.5	7.5	132S	1.52	7.5	2	3.3	0.0198	24	53	48.5	72	3535	83.0	85.5	86.5	0.75	0.84	0.88	19.0
5.5	7.5	S132S	1.52	7.5	2	3.3	0.0198	24	53	48.5	72	3535	83.0	85.5	86.5	0.75	0.84	0.88	19.0
7.5	10	132M	2.08	7.2	2	2.9	0.0207	16	35	50.0	72	3520	85.2	87.3	87.5	0.75	0.85	0.88	25.6
7.5	10	132S	2.08	7.2	2	2.9	0.0207	16	35	50.0	72	3520	85.2	87.3	87.5	0.75	0.85	0.88	25.6
11	15	160M/L	3.03	7.7	2.5	3	0.0367	9	20	97.0	75	3535	84.0	86.5	87.5	0.75	0.83	0.87	37.9
22	30	180M/L	6.02	8.0	2.4	2.8	0.0930	10	22	138	75	3560	87.0	88.5	89.6	0.72	0.81	0.86	74.9

IE1 - Standard Efficiency - 60 Hz [1) 2)]

Output		Frame	Full Load Torque (kgfm)	Locked Rotor Current Il/In	Locked Rotor Torque Tl/Tn	Break-down Torque Tb/Tn	Inertia J (kgm2)	Allowable locked rotor time (s)		Weight (kg)	Sound dB(A)	220 V							
												Rated speed (rpm)	% of full load						Full load current In (A)
													Efficiency			Power Factor			
kW	HP							Hot	Cold				50	75	100	50	75	100	
IV Poles																			
0.09	0.12	63	0.051	5.2	3.2	3.4	0.0003	22	48	4.8	48	1725	45.0	53.0	55.0	0.44	0.52	0.61	0.704
0.12	0.16	63	0.068	4.5	2.1	2.4	0.0005	25	55	5.8	48	1710	49.0	55.0	58.0	0.45	0.57	0.66	0.823
0.18	0.25	63	0.103	4.7	1.8	2.2	0.0006	16	35	6.5	48	1710	55.0	62.0	66.0	0.44	0.54	0.64	1.12
0.25	0.33	63	0.144	4.5	1.8	2.3	0.0007	13	29	6.8	48	1690	58.0	65.0	68.0	0.45	0.58	0.65	1.48
0.37	0.5	71	0.215	4.3	2.3	2.5	0.0007	12	26	8.1	47	1680	58.0	65.0	68.0	0.46	0.59	0.69	2.07
0.55	0.75	71	0.320	5.5	2.8	2.8	0.0009	12	26	10.0	47	1675	66.0	71.0	74.0	0.45	0.57	0.67	2.91
0.75	1	80	0.422	7.2	2.5	2.9	0.0032	11	24	12.0	48	1730	73.0	75.0	77.0	0.57	0.71	0.82	3.12
1.1	1.5	80	0.623	6.8	2.6	2.9	0.0032	8	18	12.0	48	1720	76.0	79.0	79.5	0.60	0.73	0.82	4.43
1.5	2	90S/L	0.840	6.4	2.5	3	0.0055	11	24	16.3	51	1740	81.0	83.1	83.1	0.60	0.72	0.78	6.07
2.2	3	90S/L	1.24	6.8	2.6	2.8	0.0066	8	18	18.3	51	1725	83.1	84.0	83.1	0.64	0.75	0.80	8.68
3	4	100L	1.70	6.8	2.4	2.7	0.0082	7	15	24.5	54	1720	83.5	84.0	84.1	0.63	0.77	0.82	11.4
3.7	5	100L	2.10	7.2	2.9	3.1	0.0090	9	20	25.5	54	1715	85.1	85.5	85.5	0.63	0.75	0.81	14.0
4.5	6	112M	2.51	7.4	2.2	3.2	0.0180	10	22	40.0	58	1745	86.0	86.5	86.2	0.60	0.72	0.79	17.3
5.5	7.5	112M	3.08	7.0	2.2	2.8	0.0180	15	33	40.0	58	1740	86.6	88.0	88.0	0.63	0.74	0.82	20.0
7.5	10	S132S	4.15	8.0	2.2	3	0.0528	7	15	57.0	61	1760	87.0	88.0	89.0	0.66	0.77	0.83	26.6
9.2	12.5	132M	5.09	7.1	2	3	0.0528	8	18	60.0	61	1760	88.0	88.3	88.5	0.68	0.79	0.84	32.5
11	15	132M	6.10	8.3	2.3	2.8	0.0563	7	15	63.0	61	1755	87.0	88.6	88.6	0.68	0.80	0.83	39.3
15	20	160M/L	8.28	7.3	2.6	2.9	0.0923	6	13	125	66	1765	87.6	89.0	89.5	0.63	0.75	0.82	53.6
18.5	25	160M/L	10.2	7.8	3.1	3.3	0.1114	7	15	143	66	1770	88.0	89.7	90.5	0.56	0.70	0.77	69.7
22	30	180M/L	12.1	7.5	2.8	3	0.1566	12	26	143	68	1770	90.2	91.0	91.1	0.70	0.80	0.84	75.4
30	40	200M/L	16.4	6.6	2.3	2.8	0.2668	19	42	200	71	1780	91.0	91.6	91.8	0.68	0.79	0.84	102
37	50	200M/L	20.4	6.6	2.3	2.3	0.3202	16	35	225	71	1770	92.0	92.3	92.5	0.75	0.83	0.86	122
High-Output Design																			
0.12	0.16	71	0.068	4.5	2.4	2.9	0.0004	25	55	6.1	47	1720	47.0	56.0	60.0	0.44	0.55	0.64	0.820
0.18	0.25	71	0.103	4.5	2.4	2.9	0.0006	25	55	7.3	47	1705	48.0	61.0	63.0	0.48	0.58	0.67	1.12
0.25	0.33	71	0.142	4.8	2.4	2.9	0.0006	14	31	7.3	47	1710	50.0	58.0	63.0	0.47	0.58	0.67	1.55
0.37	0.5	80	0.208	6.5	2.4	2.8	0.0020	12	26	9.2	48	1730	64.0	70.0	71.5	0.59	0.70	0.77	1.76
0.55	0.75	80	0.308	6.8	3	3.4	0.0024	9	20	10.0	48	1740	59.0	66.0	70.0	0.50	0.65	0.75	2.75
0.75	1	90S/L	0.420	6.5	2.8	3	0.0038	15	33	13.4	51	1740	72.5	77.0	79.5	0.55	0.68	0.77	3.22
1.1	1.5	90S/L	0.627	6.6	2.6	2.8	0.0049	10	22	15.3	51	1710	74.0	77.5	79.5	0.60	0.73	0.80	4.54
2.2	3	100L	1.24	7.0	2.8	3	0.0082	11	24	24.5	54	1725	80.0	82.0	83.1	0.58	0.71	0.79	8.79
3.7	5	112M	2.07	7.2	2	3	0.0156	14	31	36.0	58	1740	82.0	84.0	85.1	0.67	0.77	0.83	13.7
4.5	6	132S	2.48	7.5	2	3	0.0340	11	24	43.5	61	1765	83.0	85.5	86.0	0.63	0.75	0.82	16.7
4.5	6	S132S	2.48	7.5	2	3	0.0340	11	24	43.5	61	1765	83.0	85.5	86.0	0.63	0.75	0.82	16.7
5.5	7.5	132S	3.04	7.7	2.1	3	0.0415	8	18	48.5	61	1760	85.0	86.0	87.0	0.61	0.73	0.82	20.2
5.5	7.5	S132S	3.04	7.7	2.1	3	0.0415	8	18	48.5	61	1760	85.0	86.0	87.0	0.61	0.73	0.82	20.2
7.5	10	132M	4.15	8.0	2.2	3	0.0528	7	15	57.0	61	1760	87.0	88.0	89.0	0.66	0.77	0.83	26.6
7.5	10	132S	4.15	8.0	2.2	3	0.0528	7	15	57.0	61	1760	87.0	88.0	89.0	0.66	0.77	0.83	26.6
11	15	160M/L	6.07	7.0	2.5	2.7	0.0633	7	15	97.0	66	1765	85.0	86.9	88.6	0.65	0.77	0.83	39.3
18.5	25	180M/L	10.2	7.0	2.5	3.2	0.1566	13	29	143	68	1770	88.5	90.0	90.6	0.68	0.79	0.84	63.8

Notes:
(1) Efficiency values are given according to IEC 60034-2-1. They are calculated according to indirect method, with stray load losses determined by measurement.
(2) With effect from 1st January 2017, IE2 motors placed onto the European Market and rated at 0.75 kW or above, must be used with a variable speed drive unless their design falls outside of the scope of the European Regulation or their final installation will be outside of the EU / EEA.
(3) Motor with class F (105K) temperature rise.

IE1 - Standard Efficiency - 60 Hz [1) 2)]

Output		Frame	Full Load Torque (kgfm)	Locked Rotor Current Il/In	Locked Rotor Torque Tl/Tn	Break-down Torque Tb/Tn	Inertia J (kgm2)	Allowable locked rotor time (s)		Weight (kg)	Sound dB(A)	220 V							
												Rated speed (rpm)	% of full load						Full load current In (A)
													Efficiency			Power Factor			
kW	HP							Hot	Cold				50	75	100	50	75	100	
VI Poles																			
0.12	0.16	63	0.104	3.2	2.0	2.3	0.0006	20	44	6.1	47	1120	36.0	42.0	47.0	0.43	0.51	0.59	1.14
0.18	0.25	71	0.165	2.8	1.7	1.9	0.0006	31	68	7.3	47	1060	45.0	49.0	52.0	0.46	0.58	0.65	1.40
0.25	0.33	71	0.228	2.8	1.9	2	0.0007	30	66	8.5	47	1070	48.0	54.0	58.0	0.43	0.52	0.63	1.80
0.37	0.5	80	0.319	3.9	2	2.1	0.0027	10	22	10.8	47	1130	46.0	55.0	59.0	0.46	0.57	0.66	2.49
0.55	0.75	80	0.474	4.5	2.2	2.4	0.0027	10	22	10.8	47	1130	58.0	61.0	66.0	0.46	0.57	0.71	3.08
0.75	1	90S/L	0.646	5.3	2.6	2.7	0.0049	16	35	15.3	49	1130	70.5	74.3	74.5	0.48	0.61	0.70	3.77
1.1	1.5	90S/L	0.948	5.3	2.5	2.7	0.0055	10	22	16.3	49	1130	71.0	74.5	75.1	0.48	0.60	0.70	5.49
1.5	2	100L	1.27	5.8	2.4	2.8	0.0143	19	42	27.0	48	1150	75.0	77.2	78.0	0.48	0.61	0.70	7.21
2.2	3	100L	1.87	6.2	2	2.6	0.0126	11	24	25.0	48	1145	74.0	78.0	78.5	0.54	0.64	0.72	10.2
3	4	112M	2.54	6.0	2.3	2.6	0.0220	15	33	36.0	52	1150	81.0	82.8	83.0	0.57	0.68	0.75	12.6
3.7	5	S132S	3.11	6.8	2	2.4	0.0416	13	29	48.5	55	1160	84.0	85.0	84.5	0.55	0.66	0.75	15.3
4.5	6	S132S	3.78	6.4	2.1	2.6	0.0492	23	51	54.0	55	1160	83.5	85.4	85.5	0.57	0.69	0.75	18.4
5.5	7.5	132M	4.62	6.6	2.2	2.6	0.0568	20	44	63.0	55	1160	85.1	86.0	86.0	0.58	0.70	0.77	21.8
7.5	10	132M	6.30	6.5	2.1	2.5	0.0643	13	29	69.0	55	1160	85.1	86.2	86.3	0.56	0.68	0.75	30.4
9.2	12.5	160M/L	7.66	6.3	2.1	2.6	0.1191	6	13	115	59	1170	85.0	86.0	86.0	0.61	0.74	0.81	34.7
11	15	160M/L	9.12	7.0	2.7	3.1	0.1611	10	22	140	59	1175	87.0	88.5	89.0	0.60	0.72	0.79	41.1
15	20	160M/L	12.5	7.0	2.8	3.1	0.1821	8	18	155	59	1170	87.0	88.5	89.5	0.56	0.69	0.77	57.1
18.5	25	180M/L	15.4	7.9	2.6	2.8	0.2970	8	18	155	59	1170	90.0	90.3	90.3	0.78	0.86	0.90	59.7
22	30	200M/L	18.2	6.0	2.1	2.3	0.4044	18	40	215	62	1175	90.5	91.1	91.1	0.75	0.81	0.85	74.6
30	40	200M/L	24.9	6.0	2.2	2.3	0.4404	14	31	230	62	1175	91.0	91.8	91.8	0.74	0.81	0.84	102
High-Output Design																			
0.12	0.16	71	0.109	3.0	2.0	2.0	0.0006	40	88	7.3	47	1075	45.0	49.0	50.0	0.46	0.54	0.62	1.02
0.25	0.33	80	0.212	4.5	2.5	3	0.0020	14	31	9.2	47	1150	46.0	55.0	59.0	0.41	0.52	0.60	1.85
0.37	0.5	90S/L	0.313	5.0	2.9	3	0.0033	20	44	12.4	49	1150	58.5	63.0	65.0	0.43	0.55	0.63	2.37
0.55	0.75	90S/L	0.474	5.0	2.5	2.5	0.0033	16	35	12.4	49	1130	60.5	65.0	67.0	0.47	0.59	0.68	3.17
1.5	2	112M	1.26	6.2	2.4	2.7	0.0147	16	35	28.0	52	1160	71.0	76.5	78.5	0.47	0.59	0.68	7.37
2.2	3	112M	1.86	6.0	2.2	2.4	0.0238	12	26	38.0	52	1150	76.0	77.5	78.6	0.55	0.66	0.72	10.2
3	4	132S	2.52	6.2	2.1	2.4	0.0303	22	48	40.5	55	1160	79.0	82.0	83.0	0.53	0.64	0.73	13.0
3	4	S132S	2.52	6.2	2.1	2.4	0.0303	22	48	40.5	55	1160	79.0	82.0	83.0	0.53	0.64	0.73	13.0
3.7	5	132S	3.11	6.8	2	2.4	0.0416	13	29	48.5	55	1160	84.0	85.0	84.5	0.55	0.66	0.75	15.3
4.5	6	132M	3.78	6.4	2.1	2.6	0.0492	23	51	54.0	55	1160	83.5	85.4	85.5	0.57	0.69	0.75	18.4
4.5	6	132S	3.78	6.4	2.1	2.6	0.0492	23	51	54.0	55	1160	83.5	85.4	85.5	0.57	0.69	0.75	18.4
5.5	7.5	160M/L	4.58	5.6	1.8	2.4	0.0980	13	29	100	59	1170	84.5	85.0	85.0	0.63	0.75	0.82	20.7
7.5	10	160M/L	6.24	5.6	1.8	2.3	0.1191	10	22	115	59	1170	85.5	86.0	86.0	0.67	0.78	0.83	27.6
15	20	180M/L	12.5	8.3	2.5	3	0.2570	8	18	148	59	1170	88.5	89.2	89.6	0.75	0.84	0.88	49.9
18.5	25	200M/L	15.3	6.1	2	2.3	0.3692	20	44	205	62	1175	88.5	90.0	90.3	0.72	0.80	0.84	64.0

IE1 - Standard Efficiency - 60 Hz [1) 2)]

Output		Frame	Full Load Torque (kgfm)	Locked Rotor Current Il/In	Locked Rotor Torque Tl/Tn	Break-down Torque Tb/Tn	Inertia J (kgm2)	Allowable locked rotor time (s)		Weight (kg)	Sound dB(A)	220 V							
												Rated speed (rpm)	% of full load						Full load current In (A)
													Efficiency			Power Factor			
kW	HP							Hot	Cold				50	75	100	50	75	100	
VIII Poles																			
0.12	0.16	71	0.146	2.6	2.0	2.0	0.0006	60	132	7.7	45	800	41.0	46.0	50.5	0.39	0.48	0.54	1.15
0.18	0.25	80	0.209	3.2	2	2.2	0.0019	29	64	8.8	46	840	42.0	50.0	53.0	0.40	0.52	0.60	1.49
0.25	0.33	80	0.290	3.2	2.1	2.3	0.0024	23	51	10.0	46	840	48.0	53.0	56.0	0.43	0.53	0.62	1.89
0.37	0.5	90S/L	0.432	3.3	1.7	2	0.0033	29	64	12.4	47	835	56.0	62.0	65.0	0.42	0.54	0.64	2.33
0.55	0.75	90S/L	0.649	3.4	1.7	1.9	0.0044	19	42	14.3	47	825	58.0	63.0	65.0	0.45	0.56	0.67	3.31
0.75	1	90S/L	0.891	3.6	1.7	1.9	0.0063	21	46	17.8	47	820	67.0	68.0	68.0	0.45	0.60	0.68	4.26
1.1	1.5	100L	1.25	4.2	1.9	2.4	0.0127	32	70	25.0	54	860	71.5	74.1	74.5	0.42	0.53	0.62	6.25
1.5	2	112M	1.71	5.0	2.4	2.6	0.0183	34	75	32.0	50	855	75.5	78.5	79.0	0.45	0.57	0.66	7.55
2.2	3	S132S	2.49	6.0	2.1	2.6	0.0592	25	55	52.0	52	860	78.5	79.8	80.0	0.53	0.66	0.74	9.75
3	4	132M	3.38	7.3	2.5	3	0.0838	19	42	69.0	52	865	80.0	83.0	83.0	0.53	0.65	0.72	13.2
3.7	5	160M/L	4.10	5.7	2.2	3.1	0.1191	10	22	115	54	880	76.0	80.0	80.0	0.50	0.61	0.70	17.3
4.5	6	160M/L	4.98	5.7	2.1	3.1	0.1191	10	22	115	54	880	77.0	80.0	80.0	0.50	0.62	0.71	20.8
5.5	7.5	160M/L	6.09	6.0	2.3	3.3	0.1401	10	22	130	54	880	79.0	82.5	84.0	0.50	0.63	0.71	24.2
7.5	10	160M/L	8.30	5.8	2.2	2.9	0.1611	10	22	140	54	880	81.5	83.5	85.0	0.54	0.66	0.74	31.3
9.2	12.5	180M/L	10.2	7.6	2.4	2.7	0.2300	10	22	143	54	875	89.0	89.6	89.0	0.65	0.75	0.82	33.1
11	15	180M/L	12.2	7.9	2.4	2.7	0.2585	8	18	148	54	875	88.7	89.5	89.0	0.65	0.76	0.83	39.1
15	20	180M/L	16.8	7.6	2.4	2.7	0.2800	7	15	153	54	870	89.4	90.0	89.7	0.69	0.79	0.83	52.9
18.5	25	200M/L	20.5	4.8	2	2	0.4044	21	46	216	56	880	89.5	90.2	89.6	0.56	0.68	0.74	73.2
High-Output Design																			
0.12	0.16	80	0.138	3.5	2.8	2.9	0.0024	30	66	10.0	46	850	40.7	45.2	50.2	0.40	0.50	0.55	1.14
0.25	0.33	90S/L	0.286	3.5	1.9	2.2	0.0038	35	77	13.4	47	850	52.0	58.0	60.0	0.40	0.50	0.59	1.85
0.75	1	100L	0.845	4.8	2.2	2.6	0.0110	25	55	23.0	54	865	56.0	63.0	68.0	0.40	0.51	0.58	4.99
1.1	1.5	112M	1.25	5.2	2.3	2.6	0.0165	25	55	30.0	50	860	70.0	73.0	74.5	0.46	0.58	0.66	5.87
1.5	2	132S	1.69	6.5	2.5	2.7	0.0493	15	33	46.0	52	865	70.0	75.0	78.0	0.51	0.63	0.71	7.11
1.5	2	S132S	1.69	6.5	2.5	2.7	0.0493	15	33	46.0	52	865	70.0	75.0	78.0	0.51	0.63	0.71	7.11
2.2	3	132S	2.49	6.0	2.1	2.6	0.0592	25	55	52.0	52	860	78.5	79.8	80.0	0.53	0.66	0.74	9.75
11	15	200M/L	12.1	5.0	2	2.2	0.3517	26	57	198	56	885	88.1	88.5	88.5	0.57	0.69	0.75	43.5
15	20	200M/L	16.5	5.0	2.1	2.2	0.3517	26	57	198	56	885	85.4	87.5	88.6	0.53	0.64	0.72	61.7

Notes:
(1) Efficiency values are given according to IEC 60034-2-1. They are calculated according to indirect method, with stray load losses determined by measurement.
(2) With effect from 1st January 2017, IE2 motors placed onto the European Market and rated at 0.75 kW or above, must be used with a variable speed drive unless their design falls outside of the scope of the European Regulation or their final installation will be outside of the EU / EEA.
(3) Motor with class F (105K) temperature rise.

IE2 - High Efficiency - 60 Hz [1) 2)]

Output		Frame	Full Load Torque (kgfm)	Locked Rotor Current Il/In	Locked Rotor Torque Tl/Tn	Break-down Torque Tb/Tn	Inertia J (kgm2)	Allowable locked rotor time (s)		Weight (kg)	Sound dB(A)	220 V							
												Rated speed (rpm)	% of full load						Full load current In (A)
													Efficiency			Power Factor			
kW	HP							Hot	Cold				50	75	100	50	75	100	
II Poles																			
0.12	0.16	63	0.034	5.5	3.1	3.2	0.0002	25	55	5.2	56	3490	49.0	57.5	61.5	0.50	0.61	0.70	0.732
0.18	0.25	63	0.052	5.6	2.3	2.7	0.0001	19	42	5.7	56	3370	58.0	63.0	64.0	0.57	0.70	0.79	0.934
0.25	0.33	63	0.072	5.2	2.9	2.8	0.0001	18	40	6.2	56	3390	62.0	66.0	68.0	0.57	0.71	0.80	1.21
0.37	0.5	63	0.106	5.5	2.7	2.7	0.0002	8	18	7.7	56	3415	64.0	68.0	72.0	0.58	0.71	0.80	1.69
0.55	0.75	71	0.157	5.8	2.4	2.7	0.0003	14	31	6.5	60	3415	69.0	73.0	74.0	0.66	0.79	0.86	2.27
0.75	1	71	0.214	6.5	2.9	2.9	0.0005	7	15	10.0	60	3410	74.0	76.5	76.5	0.64	0.77	0.85	3.03
1.1	1.5	80	0.312	7.5	3.1	3	0.0009	15	33	14.0	62	3430	82.0	82.7	83.0	0.71	0.81	0.87	4.00
1.5	2	L80	0.425	7.2	3.5	3.4	0.0011	11	24	16.0	62	3440	81.0	83.2	84.0	0.63	0.76	0.84	5.58
2.2	3	90S/L	0.618	7.5	2.2	3.6	0.0020	6	13	18.5	68	3465	84.0	85.0	85.5	0.66	0.78	0.84	8.04
3	4	L90S/L	0.851	7.4	3	3.1	0.0030	8	18	23.5	68	3435	83.0	86.0	87.5	0.66	0.78	0.84	10.7
3.7	5	100L	1.03	8.4	2.6	3.8	0.0064	8	18	32.0	71	3515	82.0	86.0	87.6	0.65	0.78	0.85	13.0
4.5	6	112M	1.25	8.0	2.4	3.2	0.0070	16	35	40.0	69	3500	86.8	88.0	88.1	0.76	0.85	0.89	15.1
5.5	7.5	112M	1.53	8.0	2.6	3.5	0.0081	9	20	43.0	69	3500	86.5	88.5	88.7	0.71	0.82	0.87	18.7
7.5	10	132S	2.06	8.1	2.3	3.3	0.0234	10	22	65.0	72	3540	87.0	88.5	89.5	0.70	0.80	0.86	25.6
9.2	12.5	132M	2.54	8.0	2.2	3.1	0.0234	8	18	70.0	72	3530	86.9	88.5	89.5	0.74	0.84	0.88	30.6
11	15	132M	3.03	8.5	2.6	3.6	0.0270	7	15	74.0	72	3535	87.3	89.7	90.2	0.69	0.80	0.86	37.2
15	20	160M/L	4.13	8.3	2.9	3.3	0.0509	10	22	119	75	3540	88.2	89.5	90.2	0.75	0.83	0.87	50.2
18.5	25	160M/L	5.10	8.8	3.1	3.4	0.0565	12	26	119	75	3535	88.5	90.2	91.0	0.73	0.82	0.86	62.0
22	30	160M/L	6.05	9.1	3.3	3.6	0.0616	10	22	135	72	3540	89.2	90.5	91.0	0.71	0.81	0.85	74.6
30	40	200M/L	8.21	6.9	2.3	2.5	0.1884	20	44	232	79	3560	89.5	91.0	91.7	0.73	0.82	0.85	100
37	50	200M/L	10.1	6.3	2.1	2.3	0.2242	23	51	255	79	3555	91.5	92.0	92.4	0.79	0.85	0.87	121
High-Output Design																			
0.37	0.5	71	0.106	6.8	2.4	3.2	0.0004	21	46	8.5	60	3415	71.5	72.5	73.3	0.61	0.73	0.81	1.64
0.55	0.75	80	0.157	6.8	2.7	2.9	0.0005	25	55	9.0	62	3410	69.0	73.0	74.0	0.67	0.78	0.84	2.32
0.75	1	80	0.212	7.0	2.6	3	0.0007	14	31	14.0	62	3440	74.0	76.9	76.9	0.67	0.79	0.84	3.05
1.1	1.5	90S/L	0.311	7.0	2.5	3	0.0016	16	35	18.0	68	3450	78.5	81.0	83.0	0.68	0.79	0.84	4.14
1.5	2	80	0.432	6.9	3.2	3.1	0.0009	13	29	14.5	62	3385	81.0	83.2	84.0	0.66	0.79	0.85	5.51
1.5	2	90S/L	0.420	7.3	2.5	3	0.0018	11	24	17.5	68	3475	83.5	84.0	84.0	0.70	0.80	0.85	5.52
3	4	100L	0.831	8.6	2.6	3.9	0.0062	10	22	29.5	71	3515	83.0	86.0	87.5	0.63	0.76	0.84	10.7
3.7	5	112M	1.04	7.3	2.2	3	0.0063	21	46	37.0	69	3480	85.5	87.1	87.6	0.74	0.83	0.88	12.6
3.7	5	L100L	1.03	8.4	2.6	3.8	0.0064	8	18	32.0	71	3515	82.0	86.0	87.6	0.65	0.78	0.85	13.0
5.5	7.5	132M	1.51	7.9	2.2	3.3	0.0153	15	33	60.0	72	3540	85.7	88.0	88.5	0.71	0.81	0.86	19.0
5.5	7.5	132S	1.51	7.9	2.2	3.3	0.0153	15	33	60.0	72	3540	85.7	88.0	88.5	0.71	0.81	0.86	19.0
5.5	7.5	S132S	1.51	7.9	2.2	3.3	0.0153	15	33	60.0	72	3540	85.7	88.0	88.5	0.71	0.81	0.86	19.0
7.5	10	132M	2.06	8.1	2.3	3.3	0.0234	10	22	65.0	72	3540	87.0	88.5	89.5	0.70	0.80	0.86	25.6

IE2 - High Efficiency - 60 Hz [1) 2)]

Output		Frame	Full Load Torque (kgfm)	Locked Rotor Current Il/In	Locked Rotor Torque Tl/Tn	Break-down Torque Tb/Tn	Inertia J (kgm2)	Allowable locked rotor time (s)		Weight (kg)	Sound dB(A)	220 V							
												Rated speed (rpm)	% of full load						Full load current In (A)
													Efficiency			Power Factor			
kW	HP							Hot	Cold				50	75	100	50	75	100	
IV Poles																			
0.12	0.16	63	0.068	5.0	1.9	2.7	0.0004	25	55	6.2	48	1715	55.0	62.0	64.0	0.42	0.52	0.62	0.794
0.18	0.25	63	0.103	4.7	2.4	2.9	0.0006	30	66	7.2	48	1710	57.0	64.0	68.0	0.45	0.57	0.67	1.04
0.25	0.33	63	0.143	5.0	2.6	3	0.0007	25	55	8.2	48	1705	62.0	68.0	70.0	0.47	0.60	0.69	1.36
0.37	0.5	71	0.213	4.6	2.4	2.5	0.0007	35	77	8.0	47	1690	68.0	71.0	72.0	0.50	0.63	0.72	1.87
0.55	0.75	71	0.319	5.1	2.9	2.9	0.0008	31	68	11.5	47	1680	71.0	74.5	75.5	0.50	0.63	0.72	2.66
0.75	1	80	0.422	8.0	3.4	3.8	0.0030	12	26	18.0	48	1730	77.5	81.0	82.6	0.60	0.72	0.80	2.98
1.1	1.5	80	0.623	7.0	3.4	3.8	0.0033	11	24	16.0	48	1720	82.5	83.5	84.0	0.57	0.71	0.80	4.30
1.5	2	90S/L	0.835	6.5	1.9	2.7	0.0049	8	18	18.5	51	1750	80.0	82.2	84.0	0.57	0.70	0.78	6.00
2.2	3	L90S/L	1.22	7.4	2.8	3.1	0.0074	11	24	25.0	51	1750	86.0	86.5	87.5	0.61	0.74	0.81	8.14
3	4	100L	1.70	6.7	2.8	3	0.0097	16	35	33.0	54	1720	86.4	87.2	87.5	0.61	0.74	0.81	11.1
3.7	5	100L	2.08	7.5	3.6	3.6	0.0097	12	26	33.0	54	1730	86.0	87.0	87.5	0.58	0.70	0.78	14.2
4.5	6	112M	2.53	6.8	2.1	2.5	0.0180	13	29	45.0	58	1735	88.0	89.0	89.0	0.63	0.74	0.81	16.4
5.5	7.5	112M	3.08	8.0	2.4	2.8	0.0180	12	26	46.0	58	1740	88.7	90.0	90.0	0.61	0.73	0.80	20.0
7.5	10	S132S	4.15	7.8	2.6	3.1	0.0491	12	26	65.0	61	1760	90.0	91.0	91.0	0.61	0.74	0.82	26.4
9.2	12.5	132M	5.09	8.5	2.2	3	0.0563	8	18	75.0	61	1760	90.4	91.0	91.0	0.65	0.77	0.83	32.0
11	15	132M	6.10	8.8	2.6	3.4	0.0638	8	18	78.0	61	1755	90.5	91.5	91.7	0.67	0.78	0.84	37.5
15	20	160M/L	8.28	7.4	2.8	3	0.1071	9	20	120	66	1765	88.8	90.2	91.0	0.61	0.74	0.80	54.1
18.5	25	L160M/L	10.2	7.6	3	3.2	0.1263	8	18	135	66	1765	89.0	90.5	92.4	0.58	0.71	0.78	67.4
22	30	180M/L	12.2	7.0	2.5	2.6	0.1914	12	26	185	68	1760	92.7	93.0	93.0	0.71	0.80	0.84	73.9
30	40	200M/L	16.5	6.4	2.1	2.2	0.2668	20	44	218	71	1770	92.7	93.1	93.1	0.74	0.82	0.85	99.5
37	50	200M/L	20.4	6.0	2.2	2.2	0.3469	19	42	274	71	1770	93.0	93.2	93.2	0.75	0.82	0.85	123
High-Output Design																			
0.25	0.33	71	0.142	5.0	2.2	2.5	0.0006	37	81	9.0	47	1715	60.0	66.0	70.0	0.47	0.59	0.69	1.36
0.37	0.5	80	0.208	6.0	2.1	2.4	0.0017	23	51	9.0	48	1730	68.0	72.0	72.0	0.61	0.72	0.80	1.69
0.55	0.75	80	0.311	5.9	2.4	2.9	0.0020	16	35	10.0	48	1725	72.0	75.0	75.5	0.61	0.72	0.80	2.39
0.75	1	90S/L	0.415	7.2	2.3	3	0.0038	17	37	16.0	51	1760	76.0	78.5	82.6	0.56	0.69	0.76	3.14
1.1	1.5	90S/L	0.610	7.6	2	3	0.0049	10	22	18.5	51	1755	81.0	83.5	84.0	0.56	0.70	0.78	4.40
2.2	3	100L	1.23	7.6	3.2	3.5	0.0082	19	42	30.0	54	1740	85.0	87.0	87.5	0.57	0.70	0.78	8.46
3	4	112M	1.66	7.7	2.3	3	0.0130	20	44	40.0	56	1755	85.3	87.0	87.5	0.62	0.74	0.80	11.2
3.7	5	112M	2.07	7.0	2.2	2.6	0.0156	16	35	41.0	58	1740	85.0	87.5	88.2	0.60	0.72	0.78	14.1
5.5	7.5	132S	3.03	8.0	2	3.2	0.0340	8	18	60.0	58	1770	87.0	88.4	89.5	0.62	0.75	0.82	19.7
7.5	10	132M	4.15	7.8	2.6	3.1	0.0491	12	26	65.0	61	1760	90.0	91.0	91.0	0.61	0.74	0.82	26.4
7.5	10	132S	4.15	7.8	2.6	3.1	0.0491	12	26	65.0	61	1760	90.0	91.0	91.0	0.61	0.74	0.82	26.4
18.5	25	180M/L	10.2	6.8	2.6	2.9	0.1398	18	40	152	68	1765	91.0	92.0	92.5	0.70	0.80	0.84	62.4
VI Poles																			
0.12	0.16	63	0.105	3.3	2.4	2.4	0.0007	20	44	8.0	47	1110	45.0	51.0	55.0	0.45	0.52	0.58	0.987
0.18	0.25	71	0.161	3.2	2	2.1	0.0006	58	128	7.5	47	1090	48.0	55.0	56.5	0.40	0.50	0.59	1.42
0.25	0.33	71	0.221	4.0	1.9	2.5	0.0008	35	77	11.0	47	1100	63.5	64.0	64.5	0.40	0.50	0.62	1.64
0.37	0.5	80	0.316	4.1	2	2.1	0.0024	20	44	11.5	47	1140	58.0	63.0	64.0	0.51	0.64	0.74	2.05
0.55	0.75	80	0.468	5.1	2.6	2.7	0.0032	12	26	15.5	47	1145	65.0	70.6	72.5	0.43	0.55	0.64	3.11
0.75	1	90S/L	0.641	5.7	1.8	2.5	0.0056	15	33	21.0	49	1140	72.0	73.0	73.0	0.48	0.60	0.70	3.85
1.1	1.5	100L	0.924	6.4	2.4	3	0.0143	49	108	33.0	48	1160	81.5	84.3	85.5	0.47	0.60	0.69	4.90
1.5	2	112M	1.26	6.9	2.5	3	0.0220	40	88	40.0	52	1160	84.0	86.0	86.5	0.50	0.63	0.71	6.40
2.2	3	112M	1.86	6.9	2.7	3	0.0257	30	66	42.0	52	1155	85.2	86.9	87.5	0.51	0.64	0.72	9.16
3	4	S132S	2.51	6.2	1.8	2.6	0.0416	44	97	60.0	55	1165	86.0	87.5	87.5	0.52	0.64	0.72	12.5
3.7	5	S132S	3.09	6.0	2.3	2.4	0.0492	27	59	62.0	55	1165	86.0	87.8	87.7	0.55	0.68	0.75	14.8
4.5	6	S132S	3.78	6.0	2.3	2.4	0.0530	26	57	65.0	55	1160	86.5	87.7	88.0	0.55	0.67	0.74	18.1
5.5	7.5	132M	4.58	6.6	2	2.8	0.0681	35	77	80.0	55	1170	88.4	89.5	89.5	0.52	0.65	0.73	22.0
7.5	10	160M/L	6.22	6.8	2.6	3	0.1541	16	35	120	55	1175	88.5	89.0	89.5	0.58	0.71	0.78	28.2
11	15	160M/L	9.16	6.7	2.5	2.9	0.1611	11	24	130	59	1170	89.0	89.5	90.2	0.60	0.72	0.79	40.5
15	20	160M/L	12.5	6.6	2.6	2.8	0.1821	8	18	139	59	1170	89.5	90.0	90.2	0.60	0.72	0.79	55.2
18.5	25	180M/L	15.3	8.8	2.6	3.2	0.3034	8	18	180	59	1175	92.2	92.5	92.2	0.74	0.83	0.88	59.8
22	30	200M/L	18.2	6.0	2.1	2.2	0.4037	20	44	232	62	1175	92.0	92.5	92.5	0.70	0.78	0.82	76.1
30	40	200M/L	24.9	6.0	2.2	2.2	0.4388	15	33	244	62	1175	92.5	93.3	93.4	0.65	0.76	0.82	103
High-Output Design																			
0.12	0.16	71	0.103	3.0	2.0	2.2	0.0006	45	99	10.0	47	1140	49.0	56.0	57.0	0.33	0.42	0.49	1.13
0.25	0.33	80	0.212	4.5	2.5	3	0.0020	18	40	13.0	47	1150	53.0	60.5	65.0	0.41	0.52	0.60	1.68
0.55	0.75	90S/L	0.472	5.0	2.2	2.6	0.0034	17	37	16.0	50	1135	64.0	69.2	72.1	0.43	0.55	0.65	3.08
1.5	2	100L	1.26	6.1	2.4	2.8	0.0143	35	77	33.0	48	1155	82.5	85.0	86.5	0.50	0.63	0.71	6.40
3	4	132S	2.51	6.2	1.8	2.6	0.0416	44	97	60.0	55	1165	86.0	87.5	87.5	0.52	0.64	0.72	12.5
3.7	5	132M	3.09	6.0	2.3	2.4	0.0492	27	59	62.0	55	1165	86.0	87.8	87.7	0.55	0.68	0.75	14.8
3.7	5	132S	3.09	6.0	2.3	2.4	0.0492	27	59	62.0	55	1165	86.0	87.8	87.7	0.55	0.68	0.75	14.8
4.5	6	132M	3.78	6.0	2.3	2.4	0.0530	26	57	65.0	55	1160	86.5	87.7	88.0	0.55	0.67	0.74	18.1
4.5	6	132S	3.78	6.0	2.3	2.4	0.0530	26	57	65.0	55	1160	86.5	87.7	88.0	0.55	0.67	0.74	18.1
18.5	25	200M/L	15.3	6.1	2.1	2.3	0.3692	22	48	222	62	1175	91.0	91.8	92.2	0.67	0.78	0.82	64.2

Notes:
(1) Efficiency values are given according to IEC 60034-2-1. They are calculated according to indirect method, with stray load losses determined by measurement.
(2) With effect from 1st January 2017, IE2 motors placed onto the European Market and rated at 0.75 kW or above, must be used with a variable speed drive unless their design falls outside of the scope of the European Regulation or their final installation will be outside of the EU / EEA.
(3) Motor with class F (105K) temperature rise.

IE2 - High Efficiency - 60 Hz [1) 2)]

Output		Frame	Full Load Torque (kgfm)	Locked Rotor Current Il/In	Locked Rotor Torque Tl/Tn	Break-down Torque Tb/Tn	Inertia J (kgm2)	Allowable locked rotor time (s)		Weight (kg)	Sound dB(A)	220 V							
												Rated speed (rpm)	% of full load						Full load current In (A)
													Efficiency			Power Factor			
kW	HP							Hot	Cold				50	75	100	50	75	100	
VIII Poles																			
0.12	0.16	71	0.145	2.5	2.0	2.2	0.0008	66	145	11.0	45	805	42.0	48.0	53.0	0.35	0.43	0.51	1.17
0.18	0.25	80	0.203	3.2	3	3.1	0.0024	25	55	14.0	46	865	39.5	46.5	53.5	0.38	0.44	0.50	1.77
0.25	0.33	80	0.290	3.7	2.1	2.3	0.0029	39	86	13.5	46	840	52.0	58.0	59.0	0.42	0.53	0.63	1.77
0.37	0.5	90S/L	0.419	3.8	1.7	2	0.0051	31	68	19.0	47	860	57.0	61.5	65.0	0.40	0.50	0.61	2.45
0.55	0.75	90S/L	0.653	3.6	1.7	2	0.0056	25	55	22.0	47	820	59.0	64.0	66.0	0.44	0.55	0.65	3.36
0.75	1	90S/L	0.870	4.0	1.8	2.1	0.0067	23	51	23.0	47	840	67.0	68.5	70.0	0.40	0.54	0.63	4.46
1.1	1.5	100L	1.25	4.5	1.8	2.2	0.0126	25	55	30.0	54	860	74.0	76.5	78.0	0.42	0.52	0.60	6.17
1.5	2	112M	1.71	5.3	2	2.5	0.0220	43	95	40.0	54	855	80.0	83.0	83.5	0.48	0.62	0.70	6.74
2.2	3	132S	2.46	7.0	2.3	2.5	0.0740	30	66	65.0	52	870	83.0	84.5	84.5	0.55	0.67	0.75	9.11
3	4	132M	3.40	6.4	2.4	2.7	0.0838	32	70	75.0	52	860	83.0	84.5	85.5	0.51	0.64	0.73	12.6
3.7	5	160M/L	4.07	6.0	2.2	3.3	0.1191	18	40	110	54	885	80.5	83.5	85.5	0.49	0.60	0.69	16.5
4.5	6	160M/L	4.95	6.2	2.4	3.4	0.1191	18	40	110	54	885	81.5	84.5	85.5	0.48	0.60	0.69	20.0
5.5	7.5	160M/L	6.09	6.0	2.3	3.2	0.1401	12	26	120	54	880	82.0	84.5	85.5	0.49	0.62	0.70	24.1
7.5	10	160M/L	8.30	6.0	2.5	3.2	0.1755	20	44	135	54	880	85.5	87.0	88.5	0.51	0.63	0.71	31.3
9.2	12.5	180M/L	10.2	7.2	2.3	2.9	0.2482	15	33	156	54	875	89.0	89.4	89.4	0.62	0.74	0.78	34.6
11	15	180M/L	12.2	8.0	2.5	3	0.2689	12	26	170	54	875	89.0	89.4	89.4	0.57	0.70	0.78	41.4
15	20	180M/L	16.7	7.5	2.3	2.9	0.3034	9	20	177	54	875	89.9	90.1	90.1	0.61	0.73	0.80	54.6
18.5	25	200M/L	20.6	4.6	1.8	1.8	0.4044	36	79	225	56	875	89.9	90.1	90.1	0.58	0.70	0.75	71.8
High-Output Design																			
0.75	1	100L	0.845	4.8	2.0	2.6	0.0110	23	51	28.0	54	865	60.0	66.5	71.0	0.40	0.50	0.58	4.78
1.1	1.5	112M	1.25	4.8	2.1	2.6	0.0165	22	48	30.0	54	860	73.0	77.0	78.0	0.37	0.49	0.60	6.16
2.2	3	132M	2.46	7.0	2.3	2.5	0.0740	30	66	65.0	52	870	83.0	84.5	84.5	0.55	0.67	0.75	9.11
15	20	200M/L	16.6	4.8	2	2.1	0.3699	30	66	215	56	880	89.8	90.1	90.1	0.59	0.69	0.74	59.0

Notes:

(1) Efficiency values are given according to IEC 60034-2-1. They are calculated according to indirect method, with stray load losses determined by measurement.

(2) With effect from 1st January 2017, IE2 motors placed onto the European Market and rated at 0.75 kW or above, must be used with a variable speed drive unless their design falls outside of the scope of the European Regulation or their final installation will be outside of the EU / EEA.

(3) Motor with class F (105K) temperature rise.

IE3 - Premium Efficiency - 60 Hz [1) 2)]

Output		Frame	Full Load Torque (kgfm)	Locked Rotor Current Il/In	Locked Rotor Torque Tl/Tn	Break-down Torque Tb/Tn	Inertia J (kgm2)	Allowable locked rotor time (s)		Weight (kg)	Sound dB(A)	220 V							
												Rated speed (rpm)	% of full load						Full load current In (A)
													Efficiency			Power Factor			
kW	HP							Hot	Cold				50	75	100	50	75	100	
II Poles																			
0.12	0.16	63	0.034	6.3	3.3	3.7	0.0001	30	66	5.7	56	3490	52.0	60.0	62.0	0.44	0.54	0.61	0.833
0.18	0.25	63	0.053	5.5	2.3	2.9	0.0002	20	44	6.2	56	3285	64.0	66.0	66.0	0.57	0.70	0.80	0.895
0.25	0.33	63	0.072	5.0	2.5	2.8	0.0002	20	44	6.7	56	3370	67.4	69.0	69.5	0.61	0.74	0.82	1.15
0.37	0.5	63	0.107	5.8	2.6	3	0.0002	12	26	7.7	56	3360	69.0	73.0	73.4	0.58	0.72	0.81	1.63
0.55	0.75	71	0.158	6.4	3	3.1	0.0004	18	40	7.5	60	3400	72.5	75.5	76.8	0.69	0.81	0.87	2.16
0.75	1	71	0.213	7.0	3.4	3.6	0.0005	17	37	9.0	60	3425	79.0	81.5	82.5	0.65	0.77	0.84	2.83
1.1	1.5	80	0.311	8.4	3.6	3.8	0.0009	19	42	14.0	62	3445	81.0	84.0	84.6	0.64	0.76	0.83	4.11
1.5	2	80	0.427	7.8	3.6	3.6	0.0010	16	35	16.0	62	3425	84.0	85.0	85.7	0.68	0.79	0.85	5.41
2.2	3	90S/L	0.618	7.8	3.4	3.1	0.0023	14	31	22.0	68	3470	86.0	86.5	86.5	0.69	0.80	0.85	7.86
3	4	L90S/L	0.841	7.8	3.7	3.7	0.0028	11	24	23.0	68	3475	87.0	88.0	88.5	0.62	0.75	0.82	10.8
3.7	5	100L	1.03	8.2	2.9	3.8	0.0067	12	26	32.0	71	3495	86.4	88.3	88.6	0.66	0.78	0.85	12.9
4.5	6	112M	1.25	7.5	2.5	3.1	0.0081	12	26	40.0	69	3500	87.7	89.0	89.4	0.74	0.84	0.88	15.0
5.5	7.5	112M	1.53	8.3	2.8	3.5	0.0094	9	20	43.0	69	3500	87.9	89.4	89.7	0.72	0.82	0.87	18.5
7.5	10	S132S	2.06	8.6	2.5	3.6	0.0216	12	26	67.0	72	3545	87.0	88.8	90.2	0.71	0.81	0.87	25.0
9.2	12.5	132M	2.53	8.4	2.4	3.4	0.0270	10	22	74.0	72	3540	86.9	89.1	90.2	0.72	0.82	0.88	30.4
11	15	132M	3.03	8.5	2.6	3.4	0.0303	12	26	78.0	72	3535	87.3	89.7	91.0	0.73	0.83	0.88	36.0
15	20	160M/L	4.12	9.1	3.2	3.7	0.0509	10	22	119	75	3550	88.2	90.0	91.0	0.72	0.81	0.86	50.3
18.5	25	160M/L	5.08	9.4	3.3	3.6	0.0565	7	15	119	75	3545	88.2	90.0	91.7	0.73	0.82	0.86	61.6
22	30	160M/L	6.05	9.1	3.3	3.6	0.0616	10	22	135	72	3540	89.2	90.8	91.7	0.71	0.81	0.85	74.1
30	40	200M/L	8.21	6.7	2.3	2.5	0.1884	22	48	232	79	3560	91.0	92.4	92.4	0.73	0.82	0.85	100
37	50	200M/L	10.1	6.7	2.4	2.6	0.2242	25	55	255	79	3560	91.8	93.0	93.0	0.79	0.85	0.87	120
High-Output Design																			
0.25	0.33	71	0.071	6.7	2.8	2.9	0.0003	32	70	6.0	60	3430	61.0	68.0	70.0	0.69	0.79	0.85	1.10
0.37	0.5	71	0.105	6.5	2.7	3	0.0003	25	55	6.5	60	3420	69.0	74.0	74.5	0.68	0.76	0.83	1.57
0.55	0.75	80	0.156	8.0	3.2	3.5	0.0006	33	73	11.0	62	3435	74.0	74.5	76.8	0.70	0.80	0.85	2.21
0.75	1	80	0.211	8.0	3.6	3.8	0.0009	14	31	12.5	62	3460	72.0	77.0	78.0	0.61	0.73	0.82	3.07
1.1	1.5	90S/L	0.309	7.8	2.9	3	0.0018	26	57	18.0	68	3470	83.0	84.5	84.5	0.72	0.82	0.86	3.98
1.5	2	90S/L	0.417	8.0	2.3	3	0.0020	10	22	19.0	68	3500	80.7	83.5	85.5	0.70	0.80	0.85	5.42
3	4	100L	0.831	8.4	2.4	3.8	0.0064	11	24	32.0	71	3515	85.0	88.0	88.5	0.72	0.82	0.87	10.2
3.7	5	112M	1.03	7.5	2.5	3.2	0.0070	28	62	38.0	69	3495	86.3	88.0	88.6	0.73	0.83	0.87	12.6
4.5	6	132S	1.24	7.7	2.1	3.3	0.0171	20	44	60.0	72	3540	85.2	87.5	88.5	0.70	0.80	0.86	15.5
4.5	6	S132S	1.24	7.7	2.1	3.3	0.0171	20	44	60.0	72	3540	85.2	87.5	88.5	0.70	0.80	0.86	15.5
5.5	7.5	132S	1.51	8.5	2.4	3.6	0.0171	15	33	60.0	72	3545	85.7	88.0	89.5	0.68	0.79	0.85	19.0
5.5	7.5	S132S	1.51	8.5	2.4	3.6	0.0171	15	33	60.0	72	3545	85.7	88.0	89.5	0.68	0.79	0.85	19.0
7.5	10	132M	2.06	8.6	2.5	3.6	0.0216	12	26	67.0	72	3545	87.0	88.8	90.2	0.71	0.81	0.87	25.0
7.5	10	132S	2.06	8.6	2.5	3.6	0.0216	12	26	67.0	72	3545	87.0	88.8	90.2	0.71	0.81	0.87	25.0
22	30	180M/L	6.03	9.0	2.5	2.9	0.0965	10	22	161	75	3555	91.0	91.5	91.7	0.73	0.82	0.86	73.2
IV Poles																			
0.12	0.16	63	0.068	5.0	2.7	3.3	0.0005	48	106	6.7	48	1730	58.0	64.0	66.0	0.45	0.56	0.65	0.734
0.18	0.25	63	0.103	5.0	2.8	3	0.0006	39	86	7.7	48	1710	62.0	67.0	70.0	0.49	0.61	0.70	0.964
0.25	0.33	63	0.142	5.5	3.2	3.3	0.0007	30	66	8.2	48	1710	66.0	71.0	73.4	0.46	0.58	0.67	1.33
0.37	0.5	71	0.213	5.1	2.3	2.5	0.0007	52	114	8.5	47	1690	75.0	77.5	78.2	0.49	0.62	0.70	1.78
0.55	0.75	80	0.310	7.1	3	3.3	0.0024	19	42	14.7	48	1730	78.0	79.0	81.1	0.55	0.68	0.77	2.31
0.75	1	90S/L	0.414	7.6	2	2.9	0.0049	15	33	18.5	51	1765	77.0	81.0	83.5	0.51	0.64	0.73	3.22
1.1	1.5	90S/L	0.610	7.6	2.7	3.2	0.0060	18	40	22.0	51	1755	82.5	85.5	86.5	0.60	0.73	0.80	4.18
1.5	2	90S/L	0.832	7.7	2.8	3.3	0.0066	15	33	23.0	51	1755	84.0	86.0	86.5	0.59	0.72	0.80	5.68
2.2	3	100L	1.23	7.6	3.8	3.7	0.0097	24	53	33.0	54	1740	86.6	88.2	89.5	0.59	0.72	0.79	8.16
3	4	112M	1.66	7.8	2.6	3.5	0.0156	27	59	42.0	56	1760	87.2	89.0	89.5	0.58	0.70	0.79	11.1
3.7	5	112M	2.05	7.6	2.4	3.3	0.0180	23	51	44.0	56	1755	88.1	89.3	89.5	0.61	0.74	0.80	13.6
4.5	6	112M	2.51	7.0	2.2	3	0.0180	17	37	44.0	56	1745	88.7	89.5	89.5	0.61	0.74	0.80	16.5
5.5	7.5	S132S	3.03	8.4	2.4	3.6	0.0491	16	35	67.0	58	1770	89.9	91.2	91.7	0.63	0.76	0.82	19.2
7.5	10	132S	4.14	8.2	2.3	3.5	0.0563	13	29	72.0	58	1765	90.8	91.6	92.0	0.66	0.78	0.84	25.4
11	15	160M/L	6.05	7.5	2.8	3	0.1071	18	40	130	69	1770	90.0	91.0	92.4	0.65	0.76	0.82	38.2
15	20	160M/L	8.28	7.5	2.8	3	0.1263	12	26	143	69	1765	90.2	91.4	93.0	0.64	0.76	0.82	51.6
18.5	25	180M/L	10.2	8.0	2.8	3.1	0.2088	26	57	188	68	1770	93.0	93.6	93.6	0.67	0.78	0.83	62.5
22	30	180M/L	12.1	8.0	3.2	3.4	0.2306	25	55	207	68	1775	92.5	93.0	93.6	0.67	0.78	0.83	74.3
30	40	200M/L	16.4	7.8	3.1	3.3	0.3475	24	53	264	71	1780	93.5	94.1	94.1	0.70	0.78	0.84	99.7
37	50	L200M/L	20.2	8.5	2.7	3.5	0.4002	18	40	286	71	1780	93.5	94.5	94.5	0.66	0.77	0.82	125
High-Output Design																			
0.12	0.16	71	0.068	4.7	2.3	3.0	0.0004	71	156	6.0	47	1715	56.0	63.0	66.0	0.45	0.56	0.65	0.734
0.18	0.25	71	0.103	4.7	2.3	2.7	0.0005	55	121	6.5	47	1700	61.0	67.0	69.5	0.47	0.58	0.67	1.01
0.25	0.33	71	0.144	4.7	2.4	2.6	0.0006	50	110	7.0	47	1690	68.0	72.0	73.4	0.48	0.61	0.70	1.28
0.37	0.5	80	0.209	6.7	2.5	2.7	0.0020	29	64	10.0	48	1725	74.5	77.5	78.2	0.65	0.78	0.83	1.50
4.5	6	132S	2.49	7.5	2.1	3	0.0377	17	37	62.0	58	1760	88.1	89.4	89.5	0.63	0.76	0.82	16.1
4.5	6	S132S	2.49	7.5	2.1	3	0.0377	17	37	62.0	58	1760	88.1	89.4	89.5	0.63	0.76	0.82	16.1
5.5	7.5	132S	3.03	8.4	2.4	3.6	0.0491	16	35	67.0	58	1770	89.9	91.2	91.7	0.63	0.76	0.82	19.2
7.5	10	132M	4.14	8.2	2.3	3.5	0.0563	13	29	72.0	58	1765	90.8	91.6	92.0	0.66	0.78	0.84	25.4

IE3 - Premium Efficiency - 60 Hz [1) 2)]

Output		Frame	Full Load Torque (kgfm)	Locked Rotor Current Il/In	Locked Rotor Torque Tl/Tn	Break-down Torque Tb/Tn	Inertia J (kgm2)	Allowable locked rotor time (s)		Weight (kg)	Sound dB(A)	220 V							
												Rated speed (rpm)	% of full load						Full load current In (A)
													Efficiency			Power Factor			
kW	HP							Hot	Cold				50	75	100	50	75	100	
VI Poles																			
0.12	0.16	63	0.103	3.6	2.2	2.3	0.0007	56	123	8.2	47	1130	46.0	52.0	64.0	0.36	0.45	0.54	0.912
0.18	0.25	71	0.159	3.3	1.9	2.1	0.0008	69	152	8.0	47	1100	52.0	59.0	67.5	0.38	0.48	0.55	1.27
0.25	0.33	80	0.214	4.5	2.3	2.5	0.0025	30	66	12.0	47	1140	57.0	62.5	71.4	0.47	0.59	0.69	1.33
0.37	0.5	80	0.320	4.3	2	2.2	0.0030	27	59	12.5	47	1125	62.0	67.0	75.3	0.51	0.65	0.75	1.72
0.55	0.75	90S/L	0.466	6.4	2.5	3	0.0062	30	66	19.0	50	1150	78.0	81.5	81.7	0.47	0.59	0.68	2.59
0.75	1	90S/L	0.641	6.5	2.6	3.2	0.0066	20	44	23.0	49	1140	78.5	81.5	82.5	0.48	0.59	0.68	3.50
1.1	1.5	L100L	0.920	6.6	2.4	3	0.0176	61	134	38.0	48	1165	82.5	85.5	87.5	0.46	0.59	0.68	4.86
1.5	2	L112M	1.25	7.3	2.7	3.2	0.0257	48	106	42.0	52	1170	85.4	87.7	88.5	0.47	0.60	0.68	6.54
2.2	3	L112M	1.84	7.4	3.1	3.6	0.0293	33	73	47.0	52	1165	86.2	88.5	89.5	0.47	0.60	0.68	9.48
3	4	S132S	2.50	7.2	2.2	2.8	0.0530	53	117	62.0	55	1170	87.5	89.0	89.5	0.52	0.64	0.72	12.2
3.7	5	132S	3.08	7.5	2.4	3	0.0568	41	90	63.0	55	1170	87.5	89.0	89.5	0.50	0.63	0.71	15.3
4.5	6	132M	3.75	7.4	2.3	2.9	0.0643	39	86	75.0	55	1170	87.5	89.0	89.5	0.51	0.64	0.72	18.3
7.5	10	160M/L	6.22	7.0	2.6	3.1	0.1614	22	48	128	59	1175	89.5	90.5	91.0	0.60	0.73	0.79	27.5
11	15	160M/L	9.12	7.6	3	3.4	0.1895	12	26	143	59	1175	89.5	90.5	91.7	0.60	0.73	0.79	39.9
15	20	180M/L	12.4	9.0	2.8	3.6	0.3111	12	26	184	59	1180	90.5	91.0	91.7	0.68	0.79	0.84	51.1
18.5	25	180M/L	15.3	9.6	3.2	3.5	0.4193	15	33	225	59	1175	92.5	93.0	93.0	0.73	0.83	0.87	59.9
22	30	200M/L	18.2	6.5	2.4	3	0.4914	31	68	271	62	1180	92.7	93.0	93.0	0.68	0.79	0.83	74.8
High-Output Design																			
0.12	0.16	71	0.103	3.2	1.7	2.1	0.0006	112	246	7.5	47	1130	52.0	58.0	64.0	0.41	0.51	0.60	0.820
3	4	132S	2.50	7.2	2.2	2.8	0.0530	53	117	62.0	55	1170	87.5	89.0	89.5	0.52	0.64	0.72	12.2
3.7	5	132M	3.08	7.5	2.4	3	0.0568	41	90	63.0	55	1170	87.5	89.0	89.5	0.50	0.63	0.71	15.3
VIII Poles																			
0.12	0.16	71	0.144	2.8	1.9	2.0	0.0009	169	372	9.5	45	810	48.0	54.0	59.5	0.32	0.40	0.48	1.10
0.18	0.25	80	0.206	3.5	1.8	2.2	0.0027	52	114	12.0	46	850	51.0	57.0	64.0	0.44	0.56	0.65	1.13
0.25	0.33	80	0.288	3.6	1.9	2.2	0.0032	49	108	14.5	46	845	56.0	60.0	68.0	0.44	0.56	0.66	1.46
0.37	0.5	90S/L	0.429	3.4	1.7	2.3	0.0051	40	88	19.5	47	840	58.0	63.0	72.0	0.40	0.51	0.60	2.24
0.55	0.75	90S/L	0.638	3.7	1.9	2.3	0.0070	35	77	23.0	47	840	62.0	65.0	74.0	0.40	0.52	0.60	3.26
0.75	1	L90S/L	0.864	4.1	2	2.3	0.0079	25	55	25.0	47	845	66.0	71.0	72.0	0.40	0.51	0.60	4.56
1.1	1.5	100L	1.24	4.7	2	2.4	0.0143	48	106	33.0	54	865	75.5	79.0	81.6	0.40	0.52	0.60	5.90
1.5	2	112M	1.70	5.5	2.5	2.6	0.0257	46	101	42.0	54	860	80.0	83.0	84.5	0.45	0.58	0.66	7.06
2.2	3	132M	2.46	6.5	2.3	2.5	0.0838	46	101	75.0	52	870	84.0	86.0	86.5	0.51	0.64	0.72	9.28
3	4	132M	3.38	6.8	2.6	2.7	0.0888	33	73	86.0	52	865	84.5	86.0	86.6	0.51	0.64	0.72	12.6
High-Output Design																			
0.12	0.16	80	0.139	3.5	2.0	2.4	0.0020	68	150	10.0	46	840	46.0	53.0	59.5	0.42	0.52	0.61	0.867
0.75	1	100L	0.840	4.7	2	2.5	0.0121	67	147	30.0	54	870	74.0	77.0	78.6	0.39	0.50	0.59	4.24
1.1	1.5	112M	1.25	5.1	2.2	2.4	0.0202	58	128	39.0	54	855	78.0	81.5	81.7	0.47	0.60	0.67	5.28
1.5	2	132S	1.70	6.0	2	2.2	0.0592	60	132	62.0	52	860	82.0	84.0	84.5	0.52	0.64	0.72	6.48
1.5	2	S132S	1.70	6.0	2	2.2	0.0592	60	132	62.0	52	860	82.0	84.0	84.5	0.52	0.64	0.72	6.48

Notes:
(1) Efficiency values are given according to IEC 60034-2-1. They are calculated according to indirect method, with stray load losses determined by measurement.
(2) With effect from 1st January 2017, IE2 motors placed onto the European Market and rated at 0.75 kW or above, must be used with a variable speed drive unless their design falls outside of the scope of the European Regulation or their final installation will be outside of the EU / EEA.
(3) Motor with class F (105K) temperature rise.

Mechanical Data

Foot Mounted Motors

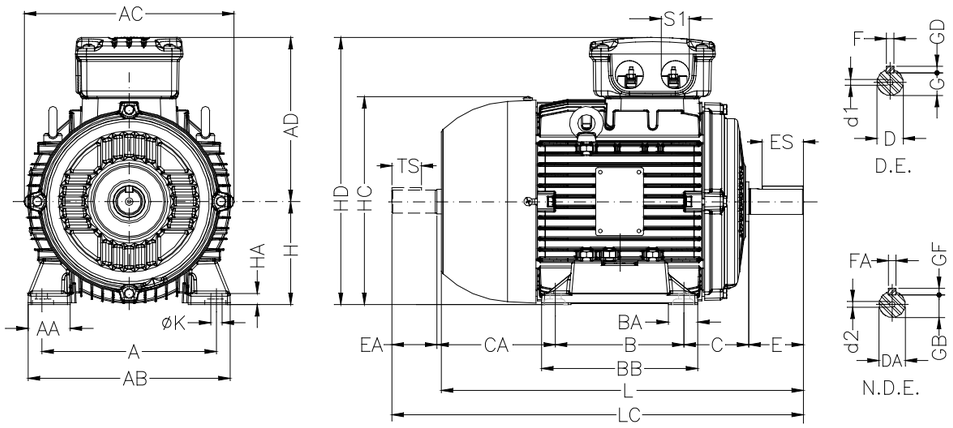

Frame	A	AA	AB	AC	AD	B	BA	BB	C	CA	Shaft Dimensions												H	HA	HC	HD	K	L	LC	S1	d1	d2	Bearings	
											D	E	ES	F	G	GD	DA	EA	TS	FA	GB	GF											D.E.	N.D.E.
63	100	19	116	125	119	80	23	95	40	78	11j6	23	14	4	8.5	4	9j6	20	12	3	7.2	3	63	6	124	182	6	216	241		EM4	EM3	6201-ZZ	
71	112	28	134	141	127	90	24.5	108	45	88	14j6	30	18	5	11	5	11j6	23	14	4	8.5	4	71		139	198	7	248	276	2xM20x1.5	DM5	EM4	6203-ZZ	6202-ZZ
80	125	32	155	159	136	100	28	124	50	93	19j6	40	28	6	15.5	6	14j6	30	18	5	11	5	80	8	157	216	10	276	313		DM6	DM4	6204-ZZ	6203-ZZ
90S/L	140	35	170	179	155	125	24	146	56	129 104	24j6	50	36	8	20	7	16j6	40	28		13		90	9	177	245		330	375	2xM25x1.5	DM8	DM6	6205-ZZ	6204-ZZ
100L	160	40	196	200	165	140	30	170	63	118	28j6	60	45		24		22j6	50	36	6	18.5	6	100	12	198	265	12	376	431		DM10	DM8	6206-ZZ	6205-ZZ
112M	190	46	220	223	184		50		70	128							24j6			8	20	7	112		235	296		393	448	2xM32x1.5	DM10	DM8	6307-ZZ	6206-ZZ
S132S	216	44	248	270	212		40		89	188	38k6	80	63	10	33	8	28j6	60	45		24		132		274	344		452	519		DM12	DM10	6308-ZZ	6207-ZZ
132S																												490	557		DM12	DM10		
132M						178	32	210		150																								
160M/L	216	62	308	347	255	210 254	60	298	108	218 174	42k6	110	80	12	37	8	42k6	110	80	12	37	8	160	18	313	414	14.5	634	756	2xM40x1.5	DM16	DM16	6309-ZZ-C3	6209-ZZ-C3
180M/L	279	68	350	306	274	241 279	49	322	121	238 200	48k6			14	42.5	9	48k6			14	42.5	9	180	20	354	454		694	820	2xM40x1.5			6311-ZZ-C3	6211-ZZ-C3
200M/L	318	73	385	386	300	267 305	60	370	133	260 222	55m6			16	49	10							200	25	393	500	18.5	758	880	2xM50x1.5	DM20	DM20	6312-ZZ-C3	6212-ZZ-C3

**The following motors have longer lamination core length, and consequently, a larger frame.*

Standard frames:

Motor	Frame	L	LC
IE3 - 3kW 4P	100L	420	475

Optional frames:

Motor	Frame	L	LC
IE2 - 1.1kW 4P	80	325	362
IE2 - 3kW 2P	90S/L	360	406
IE2 - 2.2kW 4P	90S/L	360	406
IE2 - 7.5kW 2P	112M	423	478
IE2 - 5.5kW 4P	112M	423	478

Flange mounted motors

“FF” Flange

Frame	"FF" Flange Dimensions									N° of Holes
	Flange	C	LA	M	N	P	T	S	a	
63	FF-115	40	9	115	95	140	3	10	45°	4
71	FF-130	45		130	110	160	3.5			
80	FF-165	50	10	165	130	200		12		
90S/L		56								
100L	FF-215	63	11	215	180	250	4	15		
112M		70								
S132S	FF-265	89	12	265	230	300				
132S/M										
160M/L	FF-300	108	18	300	250	350	5	19		
180M/L		121								
200M/L	FF-350	133		350	300	400				

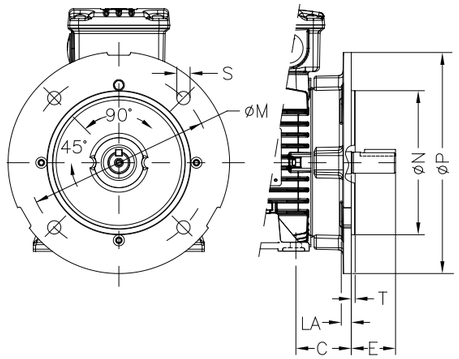

“C-DIN” Flange

Frame	"C" DIN Flange Dimensions							N° of Holes
	Flange	C	M	N	P	S	T	
63	C-90	40	75	60	90	M5	2.5	4
71	C-105	45	85	70	105	M6		
80	C-120	50	100	80	120		3	
90S/L	C-140	56	115	95	140	M8		
100L	C-160	63	130	110	160		3.5	
112M		70						
S132S	C-200	89	165	130	200	M10		
132S/M								
160M/L	C-250	108	215	180	252	M12	4	

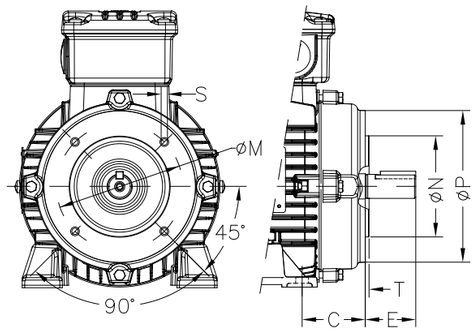

Global Presence

With approximately 37,000 employees worldwide, WEG is one of the largest electric motors, electronic equipments and systems manufacturers. We are constantly expanding our portfolio of products and services with expertise and market knowledge. We create integrated and customized solutions ranging from innovative products to complete after-sales service.

WEG’s know-how guarantees our ***W21 Aluminum Multimounting motor*** is the right choice for your application and business, assuring safety, efficiency and reliability.

Availability is to have a global support network

Partnership is to create solutions that suits your needs

Competitive edge is to unite technology and inovation

For WEG's worldwide
operations visit our website

www.weg.net

MOTORS

+55 47 3276 4000

info-br@weg.net

WEG Group
Jaraguá do Sul - SC - Brazil

Cod: 50096575 | Rev: 04 | Date (m/y): 09/2022

The values shown are subject to change without prior notice.
The information contained is reference values.